

ارامكو السعودية
Saudi Aramco

Construction Safety Manual

Vol. 1: Contractor Safety Administrative Requirements (CSAR)

Vol. 2: Work Site Safety Manual (WSSM)

Fifth Edition, 2011

©Copyright 2011, Saudi Aramco.
All rights reserved.

Saudi Aramco
Construction Safety Manual

Introduction

Saudi Aramco is committed to the prevention of incidents to minimize loss of life and bodily injury to its employees and contractor/subcontractor employees, prevent damage to physical assets and protect the public against hazards resulting from its operations. As such, Saudi Aramco considers safety to be no less of a priority than other business considerations, including schedule and cost.

In support of this commitment, the Saudi Aramco Loss Prevention publishes the Saudi Aramco *Construction Safety Manual* (CSM). This is the fifth edition of the CSM since its introduction in 1974.

This edition of the CSM is divided into two volumes. Volume One is entitled the *Contractor Safety Administrative Requirements* (CSAR). Volume Two is entitled the *Work Site Safety Manual* (WSSM).

The purpose of the CSAR is to establish Saudi Aramco's contractual requirements for management of safety by the contractor company. Thus, the audience for the CSAR is contractor company corporate and site management, not workers at the job site.

The purpose of the WSSM is to establish minimum safety-related requirements for job-site activities. As such, the audience for the WSSM is Saudi Aramco and contractor/subcontractor workers and their supervision at the work site.

The scope of the WSSM includes all construction, operations and maintenance work performed by Saudi Aramco (SA), contractor and subcontractor personnel within SA facilities, on SA project sites and at project support facilities covered under SA Land Use Permits, including laydown yards. The WSSM expands upon Saudi Aramco's minimum safety rules in order to assist Saudi Aramco proponent departments and contractors perform their day-to-day work activities safely.

The basis for many requirements in this manual is in the reference section of each chapter. Use of a reference is mandatory when it is specifically adopted by a section in this manual. Other references are to be used for additional guidance as needed.

In the event no other Saudi Aramco general instruction, engineering standard, policy or procedure exists that addresses a particular hazard, then this manual shall govern. In case of conflicting requirements, the applicable Saudi Aramco general instruction(s) or engineering standard(s) shall take priority over this manual.

The petroleum/gas industry and its work environment are in constant change due to the development of new technologies, processes, regulations and the identification of new hazards/risks. Consequently, these changes necessitate continual review and updating of Saudi Aramco's safety requirements and standards. The Loss Prevention will issue interim revisions to this manual as appropriate.

Saudi Aramco
Construction Safety Manual

Introduction

Volume 1. Contractor Safety Adminstrative Requirements (CSAR)

- Table of Contents
- Purpose
- Scope
- Standards
- General Requirements
- Contractor Safety Site Program (CSSP)
- Hazard Identification Plan (HIP) and Other Submittals
- Contractor Presonnel Safety Responsibities
- Personnel Qualifications, Training, and Certification
- Medical
- Site Planning, Usage, and Housekeeping
- Contractor Camps and Project Support Facilities

Volume 2. Work Site Safety Manual (WSSM)

- Table of Contents
- General Safety
- Civil
- Mechanical and Electrical
- Operations

Glossary

Index

Construction Safety Manual

Revision Log

Date	Volume	Chapter Title	Brief Description of Revision(s)
12/10/2024	2	I - 11 Hand Tools and Power Tools	Section 11.3.2, 11.7.3 and Table 1
10/10/2024	2	II-2: Scaffolding	Section 2.4.2.B
7/15/2024	2	I-4: Work Permit System and Stop Work Authority	Sections, 4.2, 4.4.2, 4.4.3, 4.6.3, 4.6.3.E, 4.7.3, 4.7.3.C, 4.7.5, 4.9.1
7/15/2024	All	All chapters	- Review position level names (e.g., division head) - D10Update gendered language he/his to singular they/their.
1/03/2024	2	I-8: Traffic Vehicle Safety	Complete revision
12/17/2021	All	All chapters	Loss Prevention Department (LPD) replaced with Loss Prevention (LP) throughout CSM
10/12/2021	2	II-15: Rope Access	Addition of section
3/23/2021	2	I-11: Hand Tools and Power Tools	Section 11.8.10, Figure 11.7, Figure 11.8
7/15/2020	2	III-2: Mechanical and Heavy Equipment	Sections 2.13.1, 2.13.2
4/01/2020	2	II-6: Concrete Construction	Sections 6.4.2, 6.5.2, Figure 6.4, Figure 6.5
11/28/2019	1	Contractor Safety Administrative Requirements	Sections 4.5.H, 4.12.A, 4.12.B, 4.15.H, 7.3.B, Table 8.1, 11.1.A
8/01/2019	2	I-13: Heat Stress	Appendix A
5/01/2018	2	I-1: Emergency Reporting and Response	Sections 1.4.3.A, 1.4.3.B, 1.4.4, 1.4.4.A
7/25/2017	2	I-4: Work Permit System	Sections 4.1, 4.11
12/11/2016	2	IV-2: Marine Operations	Section 2.1
12/11/2016	2	III-8: Slings and Rigging Hardware	Sections 8.2, 8.9.2, 8.13.8, 8.14.1
12/11/2016	2	III-7: Cranes and Lifting Equipment	Sections 7.2, 7.3.6, 7.3.8, Table 7.1, 7.5.3
12/11/2016	2	III-3: Electrical Equipment	Sections 3.2, 3.3.1, 3.3.2, 3.3.3, 3.3.4, 3.3.6, 3.3.9, 3.3.10, 3.3.11, 3.3.13, 3.3.16, 3.3.21, 3.3.25, 3.4.5, 3.6.1, 3.6.2, 3.6.3, 3.6.4, 3.6.6, 3.6.7, 3.7.2.D, 3.7.3.B, 3.7.3.C, 3.7.3.D, 3.8.1.D, Table 3.3, 3.8.2.A, 3.8.7.C, 3.8.8.B, 3.8.9.B, 3.8.9.D, 3.8.10.B, 3.9.4
12/11/2016	2	III-2: Mechanical and Heavy Equipment	Sections 2.2, 2.3.2, 2.3.3, 2.3.3.A, 2.3.3.B, 2.3.3.D, 2.4.1, 2.4.2, 2.7.5, 2.12.7.C, 2.13.3, 2.13.5.A, 2.13.5.F, 2.13.5.G
12/11/2016	2	II-8: Abrasive Blasting	Sections 8.2, 8.3.5, 8.3.6, 8.3.9, 8.3.12, 8.3.14, 8.3.15, 8.4.2, 8.5.2, 8.5.4
12/11/2016	2	I-6: Confined Spaces	Sections 6.2, 6.3.1, 6.3.2, 6.3.4, 6.3.6, 6.3.10, 6.3.11, 6.3.22, 6.3.24, 6.3.30, 6.3.31, 6.3.32, 6.3.33, 6.3.39, 6.4.1.C, 6.4.1.1, 6.4.1.M, 6.4.1.N, 6.4.2.J, 6.4.2.K, 6.4.2.L, 6.4.3.D, 6.6.1, 6.6.3, 6.7.1, 6.7.10.A, 6.7.10.B, 6.7.10.C, Table 6.1, 6.8.3, 6.10.2.1, Confined Space Entry Checklist
12/11/2016	2	I-4: Work Permit System	Complete revision
12/11/2016	2	I-3: Personal Protective Equipment	Sections 3.3.1, 3.3.2, 3.4.10, 3.5.2, 3.5.3, 3.6.1, Table 3.3, 3.7.1, 3.9.3, 3.11.1.D, 3.11.1.F, 3.11.1.K, 3.11.4.A, 3.11.5.A, 3.11.5.B, 3.11.5.D, 3.11.5.G
11/11/2014	2	III-2: Mechanical and Heavy Equipment	Sections 2.2, 2.3.1, 2.3.2, 2.3.3, 2.3.5, 2.3.6, 2.3.9, 2.3.11, 2.3.14, 2.3.21, 2.3.22, 2.3.23, 2.3.24, Table 2.1, 2.5.1, 2.5.3, 2.5.5, 2.5.8.D/J/K, 2.62, 2.6.7, 2.6.8, 2.7.1, 2.7.2, 2.7.3, 2.7.5, 2.7.6, 2.7.11, 2.7.16, 2.7.17, 2.7.18, 2.7.19, 2.8.8, 2.10.5, 2.12, 2.13, 2.14, Appendix A
12/21/2012	2	I-11: Hand Tools and Power Tools	Sections 11.5.3, 11.5.9, 11.6.3, 11.7.1 to 11.7.13, 11.7.15, 11.7.16, 11.7.17B, 11.7.17C, 11.7.19, 11.7.20C & 11.9.2J
3/01/2012	2	I-13: Heat Stress	Sections 13.2.1 B; 13.13.3; 13.4.2 E, 13.4.2 F & 13.4.2 I

Saudi Aramco: Company General Use

Saudi Aramco
Contractor Safety Administrative Requirements
Table of Contents

Part I. Purpose 3
Part 2. Scope 3
Part 3. Standards 3
Part 4. General Requirements 5
4.1 Contractor's Safety Program and Performance 5
4.2 Contractor Safety Prequalification 6
4.3 Contractor Prejob Safety Explanation Meetings 6
4.4 Facility Safety Orientation 7
4.5 Contractor Site Safety Staff 7
4.6 Safety Meetings 9
4.7 Contractor Safety Management Safety Meetings 9
4.8 Hazard Control and Personal Protective Equipment (PPE) 9
4.9 Health and Environmental Monitoring 10
4.10 Behavioral Observation and Site Safety Inspection 10
4.11 Site Safety Performane Monitoring 11
4.12 Work Permits 11
4.13 Jobsite Safety Logbook (JSL) 11
4.14 Failure to Comply 12
4.15 Transportation 12
4.16 Fitness for Duty 13
4.17 Heat Stress 14
4.18 Emergency Response 15
4.19 Authority for Employees to Stop Work 16
4.20 Incident Reporting and Investigation 16
Part 5. Contrator Site Safety Program (CCSP) 16
Part 6. Hazard Identification Plan (HIP) and Other Submittals 19
Part 7. Contractor Personnel Safety Responsibilities 21
7.1 General 21
7.2 Contractor Management 21
7.3 Contractor Site Management 22
7.4 Site Safety Manager/Supervisor 24
7.5 Project Engineer 25
7.6 Site Supervision 25
7.7 Field Safety Officer 27

7.8 Equipment Manager/Supervisor 27
7.9 Contractor Personnel 28
Part 8. Personnel Qualifications, Training and Certification 28
8.1 General 28
8.2 Safety Orientation for Contractor Employees 29
8.3 Short Service Employee (SSE) Program 30
8.4 Job-Skills/Craft Competency Training and Safety Training 31
8.5 Refresher Safety Training 32
8.6 Safety Training for Site Supervision and Safety Staff 32
Part 9. Medical 32
9.1 General 32
9.2 Provision of First Aid 33
9.3 Work Site Medical Facilities (Clinics) 34
9.4 Medical Professional Personnel 36
9.5 Medical Insurance and Ambulance(s) 37
9.6 Air Medical Evacuation (Medevac) 38
Part 10. Site Planning, Usage, and Housekeeping 38
10.1 Initial Site Planning 38
10.2 Site Planning and Layout 39
10.3 Plans for Contractor Camps and Project Support Facilities 39
10.4 Land Use Permit 40
10.5 Project Signs 41
10.6 Entry and Exit 42
10.7 Pedestrian Pathways On-Site 42
10.8 Barricades 42
10.9 Site Drainange 42
10.10 Fire Protection and Prevention 42
10.11 Materials Storage Yards 43
10.12 Site Illumination and Electricla 43
10.13 Security Fencing 43
10.14 Securing Site and Equipment after Working House 44
10.15 Manholes and Covers 44
10.16 Guy Lifes/Ropes 44
10.17 Road Closures 44
10.18 Dust Control 45
10.19 Protection of the General Public 45
10.20 Housekeeping 45
Part 11. Contractor Camps, Project Support Facilities, and Temporary Construction Facilities 46
11.1 General 46
11.2 Contractor Camp General Requirements 47
11.3 Minimum Safety Standards for Contractor Camp Buildings and Project Support Buildings 48

11.4 Welfare/Sanitation Facilities 50
11.5 Electrical Power Geneartion and Distribution System 51
11.6 Fire Protection Systems 51
11.7 Raw Water Treatment and Drinking Water Supply Facilities 51
11.8 Sewage and Solid Waste Management Facilities 52

Saudi Aramco: Company General Use

Saudi Aramco
Contractor Safety Administrative Requirements

1.0 Purpose

The purpose of this document is to establish Saudi Aramco's contractual requirements for a contractor company's management of safety. These contractual requirements establish minimum acceptable safety-related administrative standards and are intended to supplement, not replace, the contractor's own safety program. Contractors shall implement additional measures as necessary to ensure workplace safety and shall implement all applicable measures required by Saudi Arabian Government laws and regulations. Saudi Aramco (SA) considers safety to be no less of a priority than other business considerations, including schedule and cost.

2.0 Scope

These safety-related administrative standards shall apply to all contractor companies and their subcontractors working on long form contracts, mid form contracts and as applicable on short form contracts within SA facilities, on SA project sites and at project support facilities covered under SA Land Use Permits (including laydown, fabrication or maintenance yards), as well as contractor camps housing SA employees or contractor/subcontractor personnel who work on contracts with SA on or off SA property.

3.0 Standards

The requirements of the following SA standards are mandatory for contractor compliance.

SA General Instructions (GIs):

GI 2.100, *Work Permit System*

GI 2.102, *Pressure Testing Safely*

GI 2.709, *Gas Testing With Portable Gas Monitors*

GI 2.716, *Land Use Permit Procedures*

GI 2.718, *Contractor Site Allotment Procedure*

GI 2.721, *Electrical Arc Flash Hazard Mitigation*

GI 6.007, *Reporting of Contractor On-Job Injuries/Occupational Illnesses*

GI 6.012, *Isolation, Lockout and Use of Hold Tags*

GI 6.030, *Traffic and Vehicle Safety*

Saudi Aramco: Company General Use

GI 7.024, *Marine and Offshore Crane, Hoist, and Rigging Operations*

GI 7.025, *Heavy Equipment Operator Testing and Certification*

GI 7.026, *Crane and Heavy Equipment Incident Reporting Procedures*

GI 7.027, *Crane Suspended Personnel Platform (Manbasket) Operations*

GI 7.028, *Crane Lifts: Types and Procedures*

GI 7.029, *Rigging Hardware Requirements*

GI 7.030, *Inspection and Testing Requirements for Elevating/Lifting Equipment*

GI 7.031, *Heavy Equipment Services*

GI 8.001, *Safety Requirements for Scaffolds*

GI 150.002, *Basic Life Support (BLS) Heartsaver Automated External Defibrillator (AED) / Standard First Aid (SFA) and First Aid Kit*

GI 151.006, *Implementing the Saudi Aramco Environmental Health Code*

GI 298.010, *Administration Procedure of Contractor Camps/Parks and Construction Camps*

GI 430.001, *Implementing the Saudi Aramco Hazardous Waste Code*

GI 1021.000, *Street and Road Closure: Excavations, Reinstatement and Traffic Controls*

GI 1321.015, *Request for Air Medical Evacuation*

GI 1781.001, *Inspection, Testing and Maintenance of Fire Protection Equipment*

SA Engineering Standards (SAESs):

SAES-A-112, *Meteorological and Seismic Design Data*

SAES-B-014, *Safety Requirements for Plant and Operations Support Buildings*

SAES-B-017, *Fire Water System Design*

SAES-B-019, *Portable, Mobile and Special Fixed Firefighting Equipment*

SAES-B-055, *Plant Layout*

SAES-B-062, *Onshore Wellsite Safety*

Saudi Aramco: Company General Use

SAES-B-064, *Onshore and Nearshore Pipeline Safety*

SAES-M-006, *Saudi Aramco Security and General Purpose Fencing*

SAES-M-100, *Saudi Aramco Building Code*

SAES-P-111, *Grounding*

SAES-P-123, *Lighting*

SA *Construction Safety Manual* (CSM)

SA *Medical Minimum Standards Requirements Manual* (MMSR Manual)

Saudi Aramco Safety Handbook

Saudi Aramco Environmental Health Code (SAEHC)

Saudi Aramco Hazardous Waste Code (SAHWC)

SA Safety Management Guides (SMGs):

SMG 07-005-2012, *Application of Saudi Aramco Building Code to Contractor Camps and Project Support Facilities*

4.0 General Requirements

4.1 Contractor's Safety Program and Performance

A. The contractor shall establish an effective corporate (companywide) safety program that shall be fully implemented at each work site.

B. The contractor's corporate safety program shall be aligned with SA's safety requirements (e.g., as per Attachment A3 of the SA Safety Management Guide for Contractor Pre-Qualification Safety Evaluation) and shall govern how safety is managed throughout the contractor company.

C. The contractor's safety program shall be based on the safety/loss prevention policy formally endorsed by the contractor company's owner and/or senior management (e.g., CEO, President, General Manager).

D. The contractor's safety program shall include procedures for effectively evaluating potential subcontractors' safety programs and for conducting regular site safety performance evaluations of their subcontractor's work at the job site.

Saudi Aramco: Company General Use

E. SA reserves the right to advise a contractor in writing of its objection to the safety program or safety performance of any subcontractor. The prime contractor retains full responsibility for the safety performance of their subcontractor(s). Contractor is not relieved from any liability or obligation as a result of contractor's use of subcontractors or SA's nonobjection of said subcontractors.

F. During planning and execution of contracted work, the contractor shall meet all SA safety requirements. Contractor site management shall ensure compliance with the requirements of this document, the SA *Construction Safety Manual* (CSM), other applicable SA requirements and the Contractor Site Safety Program (CSSP) at the work site.

4.2 Contractor Safety Prequalification

In accordance with SA's contracting procedures, contractor companies are required to be successfully prequalified in safety (as per the SA Safety Management Guide, *Contractor Pre-Qualification Safety Evaluation)* before being eligible to be awarded a long form contact, mid form contract or short form contract for work to be performed within a SA facility or project site or where the SA proponent organization (SAPO) considers the work to be inherently dangerous.

4.3 Contractor Prejob Safety Explanation Meetings

A. The SAPO will communicate relevant general and site-specific safety standards and information to the contractor during prejob safety explanation meetings, including:

- Job Explanation (Job X) meetings, which are held with potential bidders, and/or
- Kick-off meetings, which are held with the contractor that is awarded the contract before they begin on-site work activities.

B. Following the prejob safety explanation meeting, the contractor shall attend any site hazard identification tour led by the SAPO, with participation by SA Loss Prevention (LP), as required.

C. Safety, health and environmental standards and information covered during these meetings may not represent all areas of potential hazard to the contractor/subcontractor's personnel and equipment. It shall be the contractor's responsibility to fully comply with the contract, including identifying and addressing all potential safety, health and environmental hazards, and to include the costs of compliance in the contract.

Saudi Aramco: Company General Use

4.4 Facility Safety Orientation

SA requires all contractor and subcontractor personnel to attend a facility-specific safety orientation prior to receiving their SA plant ID and/or being allowed to work on-site. Multiple safety orientations may be required if a plant ID permits access to more than one facility (e.g., one orientation for each facility). Unless provided by the SAPO, the contractor shall provide translation of the safety orientation presentation(s) and materials into languages understood by its employees.

4.5 Contractor Site Safety Staff

A. Contractor shall provide full-time and qualified site safety staff in accordance with Table 4.1, with respect to the maximum number of contractor and subcontractor employees who are present at the job site at a given time, or as otherwise requested by the SAPO (e.g., during a Job Explanation meeting).

Table 4.1 Contractor Site Safety Staff Requirements

# Employees	Safety Manager Required	Min. # Safety Supervisor(s) Required	Ratio of Safety Officers to Employees Present (min.)
1 - 25	No	No	None
26- 50	No	One(1)	None
51 - 500	No	One(1)	1:50
501 - 1,000	Yes	1 for every 10 safety officers	1:50
1,001 - 5,000	Yes	1 for every 10 safety officers	20 officers plus additional at ratio of 1:100
5,001+	Yes	1 for every 10 safety officers	60 officers plus additional at ratio of 1:150

B. The site safety manager (whose job title could also be site safety superintendent, senior safety engineer, safety coordinator, etc.) shall be fluent in spoken and written English and shall have at least 10 years of safety experience specific to the contract's scope of work.

C. Site safety supervisor(s) shall be fluent in spoken and written English and shall have at least seven years of safety experience specific to the contract's scope of work.

D. All field safety officers (whose job title could also be safety inspector, site safety engineer, safety advisor, safety representative or similar position) shall be fluent in spoken and written English and have at least five years of safety experience specific to the contract's scope of work.

Saudi Aramco: Company General Use

Note: Safety officers with less than five years of safety experience, as well as clerical, fire watch, confined space standby men, hazardous materials handlers, etc., shall be excluded from the numbers of safety staff in Table 4.1. Contractor is advised that additional safety officers may be necessary based on the risk of the activities to be performed and as requested by the SAPO.

E. The contractor shall provide the safety manager and each safety supervisor with a personal means of communication (e.g., mobile phone) and a dedicated motor vehicle equipped for the travel environment that may be encountered during the course of their work.

F. The names and qualifications (e.g., CV/resume, training certificates) of the safety manager, site safety supervisor(s) and all field safety officers who will work on the job shall be submitted to the SAPO for review and concurrence prior to beginning work.

G. Prior to beginning work, the SAPO will review the qualifications of the contractor's on-site safety staff, including years of relevant safety work experience, academic education and degree(s), formal safety training and internationally recognized safety certifications (e.g., OSHA, NEBOSH, NSC). If requested by the SAPO, the contractor's safety staff shall also take and pass a written examination and/or interview.

H. The SAPO reserves the right to reject proposed safety staff personnel based on review of their qualifications. Safety staff not explicitly accepted by the SAPO shall not mobilize to the work site and shall not be considered for the purpose of complying with the minimum number of qualified safety staff as required by Section 4.5.A.

I. The safety manager/supervisor and field safety officer positions shall be filled prior to commencement of on-site work and shall remain filled until completion of work.

J. Contractor safety staff personnel shall not be assigned dual roles (e.g., Not a site safety officer and the scaffold inspector).

K. During the course of the work, safety staff qualifications shall be made available for review at the contractor's site office as requested by the SAPO.

L. Contractor's site safety staff personnel shall be present at the job site at all times while contractor and/or subcontractor personnel are working, including nights, weekends, holidays and extended working hours.

M. The SAPO reserves the right to require the contractor to replace the safety manager/supervisor or any safety officers whose work is deemed unacceptable by the SAPO.

Saudi Aramco: Company General Use

N. The SAPO reserves the right to require the contractor to provide additional safety and health specialists where special technical expertise is required.

4.6 Safety Meetings

A. Contractor's site supervision shall conduct prejob ("toolbox") craft safety meetings with their personnel to address job-specific safety issues prior to beginning a different work activity. These prejob craft safety meetings shall include a review of applicable sections of the hazard identification plan (HIP). See Section 6.0.

B. Contractor's site supervision shall also conduct weekly safety meetings in the native language of the attendees. Attendees shall include contractor's and subcontractor's site personnel. These safety meetings shall be no shorter than 15 minutes and shall cover, but not be limited to, work hazards and related job procedures, as well as a review/update of the HIP.

C. Weekly safety meetings shall be documented with records maintained and shall be made available for review by the SAPO upon request.

D. Contractor site management shall attend and participate in the contractor's weekly safety meetings.

E. Upon request by the SAPO, contractor's site management, site supervision and/or site safety staff shall attend the SAPO's safety meetings (e.g., safe operations committee [SOC] meetings, safety coordination meetings).

4.7 Contractor Site Management Safety Meetings

In addition to making safety an agenda item at regular internal contractor company management meetings (e.g., project progress meetings), contractor site management (e.g., project manager, construction managers, site superintendents) shall conduct a separate meeting, at least monthly, to discuss safety, health and environmental issues. Minutes of these meetings shall be documented. Action items and needed corrective actions shall be documented and tracked until closed. Copies of these documents shall be provided to the SAPO upon request. Attendees shall include senior site supervision, the safety manager/supervisor(s), safety officers, key field personnel and, if requested, representatives from the SAPO and other applicable SA organizations.

4.8 Hazard Control and Personal Protective Equipment (PPE)

A. Hazards not eliminated through design shall be mitigated by appropriate administrative controls (e.g., safe work procedures) and/or personal protective equipment (PPE) controls.

Saudi Aramco: Company General Use

B. Contractor and their subcontractor(s) shall provide the proper PPE (e.g., hard hat, safety glasses, safety shoes, hearing protection, gloves) that meets SA specifications to its employees. See Chapter 1-3, *Personal Protective Equipment (PPE),* of the SA *Construction Safety Manual* (CSM).

C. Contractor and subcontractor personnel who work in SA plant areas where use of flame resistant clothing (FRC) is required or who may be exposed to a flash fire hazard shall be provided by their employer with the proper type, size and quantity of FRC in accordance with SAPO requirements.

D. The type, size and quantity of arc flash PPE and FRC per GI 2.721 shall be provided to electrical workers by their employer and shall be properly used.

4.9 Health and Environmental Monitoring

Health and environmental monitoring shall be conducted by the contractor, as applicable (e.g., as identified in the HIP), to protect their personnel against exposure to health hazards (e.g., radiation, H2S, respiratory, noise). Monitoring shall be performed by qualified personnel and the results shall be submitted to the SAPO for review upon request.

4.10 Behavioral Observation and Site Safety Inspection

A. The contractor shall implement behavioral observation and site inspection programs to detect and correct unsafe acts and conditions. Observations and inspections shall be frequently (e.g., weekly) conducted by contractor site management (e.g., project manager, construction manager, site superintendent), safety staff, supervisors and employees, who shall be properly trained.

B. Unsafe acts and conditions shall be immediately reported to the relevant supervisor for correction as soon as practical. Life threatening hazards shall be corrected immediately. Corrective actions for unsafe conditions shall be identified and tracked until completion, with follow-up to verify proper implementation.

C. Contractor shall perform trending and analysis of behavioral observations and site safety inspections to identify negative trends and mitigate safety problems.

D. Statistics of inspection findings and observations shall be used to establish the priority of safety talks and training topics.

E. Contractor shall provide copies of any and all inspection and observation records as requested by the SAPO.

Saudi Aramco: Company General Use

4.11 Site Safety Performance Monitoring

A. The SAPO will monitor, evaluate, inspect and report contractor job site safety performance. Performance monitoring will be performed in accordance with the SA Safety Management Guide, *Contractor Site Safety Performance Monitoring* and/or Project Management's Project Safety Index (PSI). Contractor shall participate in site safety evaluations and inspections, as requested by the SAPO.

B. A rating of "poor" (4) or "unsatisfactory" (5) in any evaluation category on the SA Contractor Site Safety Evaluation Form (Attachment A3 in the SMG) or PSI is considered a violation of the safety requirements of the contract. In this case, the SAPO reserves the right to conduct performance counseling meeting(s) with contractor management and/or take other measures in accordance with SA's contracting procedures.

C. Corrective actions shall be implemented by the contractor within any SA-specified time period and in accordance with Section **4.14** herein. Corrective actions shall be identified and tracked until completion, with follow-up to verify proper implementation.

4.12 Work Permits

A. For work to be carried out in SA-specified "restricted areas," and for conducting designated "restricted activities," or as may be required by the SAPO, contractor and subcontractor personnel shall comply with the requirements of GI 2.100, GI 2.102, GI 2.709, GI 6.012, as well as Chapter 1-4, *Work Permit System,* of the CSM.

B. Contractor's and subcontractor's work permit receivers shall obtain the proper work permit (e.g., hot work permit or cold work permit) and any associated confined space entry and equipment opening/line break permits for work to be carried out in SA-specified "restricted areas," and for conducting designated "restricted activities," or as may be required by the SAPO.

C. Contractors shall maintain records of their current receiver certificate holders, with their names and corresponding certificate expiration dates.

4.13 Jobsite Safety Logbook (JSL)

A. For capital project construction contracts and other long form contracts as requested by the SAPO, a hardbound Jobsite Safety Logbook (JSL), supplied by the contractor(s), shall be maintained at the SA job site office. The JSL shall have pages that are sequentially numbered.

B. The SAPO (e.g., SA Project Management), LP or other SA personnel will enter their name, date and comments regarding safety observations in the JSLon the left-hand page.

Saudi Aramco: Company General Use

C. Contractor shall immediately take necessary corrective actions to mitigate observed safety hazards, including those documented in the JSL.

D. Contractor responses shall be entered within 48 hours on the right-hand page opposite the SA entry. Contractor responses shall clearly state action items, responsible parties, and estimated time for completion (ETC) in order to close the entry.

E. A member of the contractor's site management (e.g., project manager, job manager, site superintendent), other than safety staff, shall sign/date that entries are properly closed.

F. The SAPO reserves the right to notify contractor of failure to properly close JSL entries and to take necessary actions to eliminate the subsequent deficiency.

G. Failure to correct deficiencies noted in the JSL may result in that part of the job site work activities being suspended at the contractor's expense until the noted safety deficiencies have been corrected.

H. JSLs shall be given to the SAPO when all pages are filled and/or at job completion.

4.14 Failure to Comply

A. Upon receiving notification from the SAPO of failure to comply with the requirements of the contract and any actions needed to prevent the injury or death of personnel, damage to equipment, loss of process or damage to the environment during performance of work, the contractor shall immediately take all necessary actions including, but not limited to, action requested by the SAPO.

B. If contractor fails to take prompt corrective action, the SAPO may direct the contractor to suspend all or part of the work until satisfactory corrective action has been taken. Costs incurred by contractor as a result of such work suspension shall be solely the contractor's responsibility.

C. Disputes involving safety shall be elevated to the contractor's higher management for resolution before work can proceed.

4.15 Transportation

A. Contractor and their subcontractors shall provide safe and adequate transportation to and from the work site for their employees.

B. The contractor shall install and maintain roads as needed to access the work site (e.g., for remote capital projects).

Saudi Aramco: Company General Use

C. Contractor-provided transportation shall stop at a safe location completely off the main road or highway (e.g., on a side street or authorized bus stop) and contractor personnel shall only disembark on the safe (i.e., sidewalk) side.

D. Motor vehicles used for transportation of contractor's employees shall have a valid SA sticker (if required to enter a SA facility) and be kept in a clean and hygienic condition. Automobiles shall be air-conditioned. Defective vehicles shall not be used for transportation.

E. Contractor's employees shall be transported in the passenger compartments of motor vehicles equipped with seat belts for all occupants. All seats in cars and trucks shall face forward.

F. For larger sites, suitable buses may be used for transportation of employees. All buses shall have seat belts provided for all occupants and have air-conditioning installed.

G. Seat belts shall be continuously worn by all occupants of motor vehicles and buses in motion.

H. Buses shall not be overloaded (no more occupants than the manufacturer's stated seating capacity of the bus) and emergency exits shall be accessible and operable (not blocked or locked). Buses shall be equipped with fire extinguisher(s).

I. Motor vehicles and buses shall be in good working order. Documented inspections shall be performed for motor vehicles and buses at least monthly. Motor vehicles and buses shall be maintained in accordance with the manufacturer's instructions. The SAPO reserves the right to require removal and replacement of any motor vehicle or bus deemed unsafe or unfit for its intended purpose.

J. Personnel operating motor vehicles and buses on SA property or project sites shall follow all Saudi Arabian Government regulations, GI 6.030 requirements and the rules and requirements in Chapter 1-8, *Traffic and Vehicle Safety,* of the CSM.

K. Contractor site management shall develop and implement a remote area travel program to control travel and provide for any necessary search and rescue of their employees in remote areas.

L. For remote travel and oversize/heavy loads, the contractor shall implement a journey management program.

4.16 Fitness for Duty

A. Contractor shall verify that its personnel are fit for duty relative to medical, physical and substance abuse considerations.

Saudi Aramco: Company General Use

B. Contractor shall arrange for vision check(s) for all employees needing or suspected of needing corrective lenses in order to perform their assigned work.

C. Contractor shall ensure that personnel requiring sight correction (as determined by a vision check) wear appropriate safety eyewear (i.e., prescription safety glasses with side protection or safety overglasses over standard prescription glasses). See Chapter 1-3, *Personal Protective Equipment (PPE),* of the CSM.

D. To prevent serious fatigue, contractor and subcontractor personnel shall not work excessive hours, with a maximum of 12 hours daily, except as may be requested/approved by the SAPO (e.g., during an emergency or unforeseen circumstances). Maximum work hours including portal-to-portal transportation shall not exceed 16 hours in any 24 hour period.

4.17 Heat Stress

A. Contractor management is responsible for managing their employees' work so as to avoid and prevent heat-related illnesses. Contractor shall ensure the requirements in Chapter 1-13, *Heat Stress,* of the CSM are fully implemented at the work site.

B. Prior to performing work during hot weather, the contractor shall conduct a thorough heat stress evaluation to identify tasks and conditions that present a potential heat stress hazard. This evaluation shall include observations, discussions with workers and supervisors, review of any previously reported heat-related illnesses and shall be based on the U.S. Occupational Safety and Health Administration (OSHA) Technical Manual TED 01-00-015, Section Ill: Chapter 4, "Heat Stress" and/or the National Institute for Occupational Safety and Health (NIOSH) *Occupational Exposure to Hot Environments.*

C. The contractor shall develop and implement a written heat stress management program based on the results of the heat stress evaluation, as well as SA's heat stress requirements. The contractor shall provide proper resources to support implementation of the plan, including but not limited to procurement and provision of materials and supplies. The contractor's heat stress management program shall be submitted to the SAPO for review and concurrence prior to the start of work during hot weather (i.e., prior to April 1).

D. The contractor's heat stress evaluation and management program shall address the following:

- Job Location - specific locations of each task, including proximity to heat-producing equipment, confined spaces, work requiring specialized PPE, etc.

Saudi Aramco: Company General Use

- Work Duration and Schedule - frequency at which the task is performed and how much time and effort is required to perform the work.
- Clothing -what workers wear can make a big difference in how much body heat they build up. Additional work clothing and/or more frequent laundry cycles shall be provided to enable workers to wear clean clothes each day.
- Environmental Conditions - procedures to monitor air temperature and humidity and immediately communicate changing heat stress conditions to workers (e.g., use of color-coded flags and/or mass distribution of SMS mobile phone text messages to site supervisors and other personnel in nonrestricted areas).
- Controls - plan for and provide needed heat stress controls (i.e., engineering, administrative and personal protective controls) that shall be used to prevent heat-related illness. See Chapter 1-13, *Heat Stress,* of the CSM.

E. Contractor shall provide training to site management and supervision on the heat stress management program, including recognition of, prevention of and response to heat-related illness, with emphasis on their responsibilities for ensuring safe working conditions (particularly suitable work/rest rotations for workers).

F. Contractor shall provide training and guidance to their employees in the recognition of, prevention of and response to heat-related illness.

4.18 Emergency Response

A. An emergency response plan (ERP) for each specific site shall be established by the contractor and/or by the contractor in coordination with the SAPO. For additional information, see the SA Emergency Management Guide. The contractor's ERP shall be submitted to the SAPO for review prior to the start of work.

B. Contractors shall ensure that their ERP is aligned with the SAPO and/or SA facility's ERPs, as applicable.

C. Contractor shall train personnel on their specific roles in the ERP and shall conduct their own periodic emergency drills.

D. When an emergency alarm is sounded for any reason, all contractor personnel shall immediately shut down their job, make it safe and proceed in an orderly manner to the designated assembly point.

E. SA periodically conducts emergency response drills to perform and evaluate emergency response procedures. All contractor personnel are required to take part in these drills just as if it were an actual emergency as mentioned above.

Saudi Aramco: Company General Use

F. Any action items from critiques of emergency drills that are applicable to the contractor shall be implemented by contractor site management. Review and verification of closure of these action items shall be performed during contractor site management safety meetings.

G. For projects outside of SA facilities, the contractor shall install a proper emergency notification system and alarm(s), which shall include prompt activation of emergency response personnel. Contractor shall periodically conduct emergency response drills to evaluate emergency response systems and procedures.

4.19 Authority for Employees to Stop Work

Contractor shall provide the SAPO with written evidence that its employees and subcontractor employees clearly have authority to stop their own work and the work related to the contract due to unsafe conditions or acts.

4.20 Incident Reporting and Investigation

A. Contractor shall establish a policy and procedures to promote timely reporting of all unsafe acts and conditions, near-misses, injuries and other incidents, in accordance with GI 6.007 and Chapter 1-2, *Incident Reporting and Investigation.* Proper corrective actions shall be promptly taken.

B. Contractor shall investigate all incidents involving their personnel and/or their subcontractors' personnel and shall participate in any SA incident investigation as requested by the SAPO.

C. Contractor's incident investigations shall be performed in a timely manner and root causes of the incident shall be properly identified. Effective corrective actions to prevent recurrence shall be identified and tracked to completion, with follow-up to verify proper implementation.

5.0 Contractor Site Safety Program (CSSP)

5.1 Contractor shall properly plan and establish job-specific safe work procedures for all contracted work. For long form capital project construction contracts where SA Project Management is the proponent or as requested in writing by the SAPO, the contractor shall develop, implement and adhere to a ***job-specific*** contractor site safety program (CSSP) that conforms to the requirements of the contract, this document and all other applicable SA safety requirements. If requested by the SAPO, the contractor shall submit a supplementary detailed safety plan as may be needed before starting a new major phase of work.

Note: The CSSP replaces the previously required contractor Loss Prevention Program (LPP), which no longer needs to be submitted.

Saudi Aramco: Company General Use

5.2 CSSP Submittal and Review Requirements

A. Within fifteen (15) working days of contract execution, contractor shall submit three copies of the job-specific CSSP to the SAPO for review. The SAPO will forward a copy of the CSSP to the Loss Prevention (LP) and other applicable SA organizations for additional review.

B. Any review comments will be forwarded to the contractor for its action. Contractor shall address all comments and resubmit the CSSP to the SAPO for final review and concurrence. Contractor shall not begin work onsite until the job-specific CSSP for the contract, if required, has been concurred with by the SAPO. The contractor shall furnish two (2) copies of the final CSSP to the SAPO prior to the start of work and shall also maintain copies at the job site.

5.3 The CSSP shall state specifically ***how*** the contractor will meet SA's safety requirements for the work to be performed. The CSSP shall include the following, as applicable to the contract and work to be performed:

A. Title page, specifying budget item (BI), job order (JO) or contract number.

B. Job title and brief scope of work.

C. Site location map(s) with legend (symbols).

D. Contractor company's current safety policy (signed by their upper management).

E. Job-specific organization chart that clearly defines safety reporting relationships.

F. Names and qualifications (e.g., CV/resume) of safety manager/supervisor(s) and safety officers, as required.

G. Job-specific assignment of safety responsibilities by job classification.

H. Job-specific training needs analysis (e.g., training matrix) showing the safety training and job-skills/competency training required for all job classifications, as applicable to project's scope of work.

I. Written *safety* training program that includes: (1) a description of the basic safety training courses (e.g., first aid, fire safety, hazard recognition, confined space safety, H2S safety, driving safety) provided to contractor company's employees, (2) how these safety training courses are delivered (e.g., in-house, third-party) and (3) which of these courses are required for each type of job (e.g., documented in a safety training matrix or safety training plan).

Saudi Aramco: Company General Use

J. Written *iob skills/craft competency* training program that includes: (1) a description of the specific job skills/craft training courses required for each type of job (e.g., HVAC technician, plumber, pipefitter, scaffolder, welder) that are specific to their work for SA, (2) how these job skills/craft training courses are delivered (e.g., in-house and/or third-party) and (3) refresher training frequency.

K. List of jobs to be performed that require SA-approved certification (e.g., scaffold supervisor/inspector, crane/heavy equipment operator, rigger, welder).

L. Complete list of known subcontractors.

M. Project-specific plan/program the contractor will use for managing their subcontractors, including their safety performance.

N. Procedures for behavioral observations, site safety inspections, safety meetings, incident/injury/near miss reporting and investigation, safety training, safety recommendation tracking, etc.

0. Description of contractor's site safety incentive and/or disciplinary action programs.

P. Hazard identification plan (HIP) as per Section 6.0.

Q. Waste management plan as per Section 10.0.

R. Hazardous substances plan, which describes the contractor's procedures for identifying and handling hazardous chemicals, materials, etc. Hazardous chemicals/materials shall be stored and handled in accordance with SA chemical hazard bulletins (CHBs) and the manufacturer's material safety data sheets (MSDSs).

S. Job-specific and/or location specific safety procedures that are applicable to the contract's scope of work. These procedures may include but are not limited to: work permits, confined space entry, PPE, respiratory protection, fall protection, lock-out/tag-out, waste management, site demobilization/restoration, emergency response, etc., (see Section 6.2 for additional topics).
Note 1: When the SAPO has applicable procedures, the contractor shall adopt them by reference with the contractor's job-specific safety procedures supplementing SA's requirements by explaining specifically ***how*** the contractor will meet SA's requirements. The contractor's safety procedures shall ***not be a verbatim copy*** of SA's safety requirements (e.g., copied directly from the SA *Construction Safety Manua .*

Note 2: If the SAPO confirms that they do not have the needed existing procedures or that their procedures are not applicable to the project, the contractor shall develop their own safety procedures.

Saudi Aramco: Company General Use

5.4 Since the contractor is completely responsible for their subcontractors, the contractor shall verify that the safety procedures and safe work practices identified in each subcontractor's site safety program are adequate and satisfy SA's and the contractor's minimum expectations and requirements. In the event that any subcontractor's safety procedure or safe work practice does not meet the minimum expectation, contractor shall work closely with subcontractor to develop/upgrade the appropriate safety procedure or safe work practice. Contractor shall complete the verification process prior to commencement of the work. SAPO may participate in the development/upgrade process at their discretion.

6.0 Hazard Identification Plan (HIP) and Other Submittals

6.1 For all SA contracts (e.g., long form, mid form and short form contracts), the contractor and/or their subcontractor(s) shall develop, implement and adhere to a contract-specific HIP. The HIP shall list all tasks/activities associated with the contracted work, potential hazards of each activity and control measures to mitigate these hazards. The contractor's HIP shall identify all potential hazards associated with the work to be performed. The HIP shall not be a list of generic hazards.

6.2 The topics in Table 6.1 represent some, but may not be all, of the safety issues that shall be considered when developing the HIP.

Saudi Aramco: Company General Use

Table 6.1 Possible HIP Topics

Abrasive blasting	Falling object prevention
Asbestos	First aid, medical facility, hospital transfer provisions
Blinding	Hand tools
Cartridge operated tools (Hilti)	Heat stress hazards
Chemicals and chemical handling	Heavy equipment operations
Communications	Housekeeping
Compressed gas cylinders	Hydrogen Sulfide (H2S)
Concrete formwork & shoring	Hydrotesting
Concrete placement	Impact on SA's operations
Confined space entry/rescue	Ionizing radiation
Cranes and rigging	Isolation/lockout/hold tag
Cutting, welding and brazing	Materials handling
Demobilization	Painting and coating
Driving/vehicle safety	PPE
Dust control	Portable power tools
Electrical safety	Scaffolding
Elevating/lifting equipment	Steel erection
Emergency response	Transportation
Excavations and shoring	Welding on lines in service
Explosives	Work at heights
Fall prevention/protection	Work over water
Fire prevention/firefighting	Work permits

6.3 Within fifteen (15) working days of contract execution, the contractor shall submit three copies of contractor's job-specific HIP to the SAPO for review. The SAPO will forward a copy of the HIP to the LP and other applicable SA organizations for additional review.

6.4 Any comments will be forwarded to the contractor for its action. Contractor shall address all comments and resubmit the HIP to the SAPO for final review and concurrence. Contractor shall not begin work on-site until the HIP for the contract has been concurred with by the SAPO. The contractor shall furnish two (2) copies of the final HIP to the SAPO prior to the start of work and shall also maintain copies at the job site.

6.5 The contractor's job-specific HIP shall be revised and amended, as needed, when conditions change, new hazards are introduced or the scope of work changes.

Saudi Aramco: Company General Use

6.6 In addition to the HIP, contractor shall submit, as applicable to the contract, job-specific plans such as, but not limited to: site layout plans, site-specific traffic flow plans, fire protection plans, security fence layout plans, project support facility plans (e.g., office, maintenance, sanitary, dining, laydown/storage facilities) and contractor camp plans (see Section 10.3 and Section 11.0 herein). The contractor shall submit three copies of these job-specific plans to the SAPO for review within fifteen (15) working days of contract execution. Contractor shall not begin work on-site until the job-specific plans for the contract have been reviewed by the SAPO. Contractor shall furnish two (2) copies of these job-specific plans to the SAPO prior to the start of work and shall also maintain copies at the job site.

7.0 Contractor Personnel Safety Responsibilities

7.1 General

A. Each contractor employee working on SA jobs shall comply with the SA GIs, standards, manuals and other contract documents that are applicable to the work, including the SA *Safety Handbook.*

B. The contractor's line management and site supervision shall be fully responsible for compliance with SA's safety requirements. This responsibility shall not be delegated to the contractor's safety manager/supervisor(s)/officer(s).

C. Contractor supervisory personnel or other qualified staff shall be present at the job site while work is in progress.

D. The contractor shall remove from the job site any of its employees who refuse or repeatedly fail to comply with safe work practices or supervisors who fail to enforce compliance, including as requested by the SAPO.

E. Listed below are some responsibilities associated with specific contractor job categories, as applicable (e.g., specific management and supervisory job categories may not be required or may be combined if agreed to by the SAPO). Contractor personnel working on SA jobs shall abide by these responsibilities.

7.2 Contractor Management

Contractor company management shall:

- Ensure compliance with SA's safety requirements for the control of injury, damage and fire as stated in the contract, in particular Schedule "D" and this document.
- Ensure preparation and submittal of a contract-specific CSSP and/or HIP, as required by the SAPO.

Saudi Aramco: Company General Use

- Ensure the contractor's subcontractor selection process includes an evaluation of subcontractor safety management program and performance.
- Provide the necessary personnel, training, tools, equipment and materials to enable the work to be performed competently and safely.
- Train and qualify contractor site management and supervision on their job safety responsibilities, including incident investigation and job safety analysis (JSA).
- Conduct training needs analysis to determine the required training for all levels of contractor employees.
- Ensure contractor employees are trained and qualified on their safety responsibilities.
- Provide needed PPE and establish training/procedures to ensure proper PPE selection, use and maintenance.
- Participate in coordination (interface) meetings between SA, subcontractors and any other contractors that may be working on the same jobsite to coordinate work activities.
- Ensure development, SAPO review and implementation of detailed procedures for critical work activities such as welding, tie-ins, hot taps, loop tests, excavations, confined space entries, equipment/vehicle access, etc.

7.3 Contractor Site Management

A. The contractor's site management (project manager, construction manager, site superintendent or equivalent position) shall establish the following at the planning stage:

- Safety responsibilities for supervisors, subcontractors and other personnel.
- Fire prevention and protection provisions.
- Emergency vehicle access.
- Specific hazards to be identified in the CSSP and/or HIP.
- Job-skills/craft training and safety training/orientation requirements for personnel.
- Types and quantities of PPE needed.
- First aid, medical and sanitation facilities needed.
- Work permit procedures and requirements, if not already established by the SAPO.
- Emergency Response Plan (ERP) and/or emergency procedures aligned with any applicable SAPO ERP.

Saudi Aramco: Company General Use

B. The contractor's site management shall be fully responsible for implementation of all contractual requirements at the job site and shall visibly demonstrate the priority of safety in all activities, including setting a good personal example and as follows:

- Empower all contractor and subcontractor personnel on site to stop their own work and work related to the contract that they deem to be unsafe and take immediate corrective actions as needed.
- Understand and implement the safety and health requirements of the contract, in particular Schedule "D" and this document.
- Implement the CSSP and/or HIP and convey the safety responsibilities of each level of supervisory staff.
- Use only SA-certified work permit receivers when work will be conducted in SA "restricted areas," and for designated "restricted activities," or where required by the SAPO.
- Implement contractor's work permit procedures in work areas where SA work permits are not required or as requested by the SAPO.
- Attend/conduct safety meetings to promote and reinforce proper safety and health performance.
- Periodically inspect the work site, report any unsafe acts/conditions to the contractor's site supervisor and/or foreman, provide recommendations to correct deficiencies and perform follow-up inspections to ensure corrective actions have been taken.
- Routinely consult with the contractor's safety manager/supervisor(s)/officers to assess the job site safety status and identify areas for supervisors and foremen to take corrective action.
- Provide and maintain a Jobsite Safety Logbook (JSL) at each separate job site (note: the JSL shall be used by SA and the contractor to document unsafe acts/conditions and the corrective actions taken).
- Ensure that the appropriate supervisor or foreman responds immediately to comments written in the JSL.
- Review work methods and precautions with site supervision before work starts.
- Immediately report all incidents and near misses to the SAPO in accordance with GI 6.007 and Chapter 1-2, *Incident Reporting and Investigation,* of the CSM.
- Ensure incidents and near misses are properly investigated to determine root causes, make recommendations to prevent recurrence and that corrective actions have been taken.

Saudi Aramco: Company General Use

7.4 Site Safety Manager/Supervisor

The contractor's site safety manager/supervisor (site safety superintendent, senior safety engineer, safety coordinator or equivalent position) shall visibly demonstrate the priority of safety in all activities, including setting a good personal example and as follows.

- Be responsible and accountable for the proper performance of field safety officers under their authority.
- Be empowered in writing by their management to stop their own work and work related to the contract that they deem to be unsafe and take immediate corrective actions as needed.
- Understand safety and health requirements of the contract - in particular Schedule "D" and this document- as well as the CSSP/HIP and CSM.
- Conduct safety kickoff meetings with subcontractors to explain site-specific safety requirements and expectations.
- Ensure all contractor and subcontractor personnel attend site safety orientations, including as required by the SAPO, and ensure contractor and subcontractor personnel attend applicable safety training.
- Communicate safety rules and standards to the contractor and subcontractor workforce.
- Provide/assist with safety training for personnel.
- Periodically inspect the work site, report any unsafe acts/conditions to the area supervisor and/or foreman, provide recommendations to correct deficiencies and follow-up to verify corrective actions have been taken.
- Keep a record of safety meetings, including agendas and personnel attendance records.
- Keep a permanent record of job-related injuries/illnesses, near misses, fires, motor vehicle accidents, property damage, crane and heavy equipment incidents, etc.
- Participate in incident investigations, safety meetings, drills, etc., and conduct/facilitate safety training sessions.
- Ensure general safety rules are printed in languages understood by contractor and subcontractor personnel and are posted in areas where they are clearly visible.

Saudi Aramco: Company General Use

7.5 Project Engineer

A. The contractor's project engineer (project superintendent or equivalent position) shall immediately notify the contractor's site management and the SAPO of the following:

- Injury or death of personnel, damage to equipment, loss of process or damage to the environment.
- Safety infractions noted during site inspections, etc.

B. The contractor's project engineer shall visibly demonstrate the priority of safety in all activities, including setting a good personal example and as follows:

- Conduct daily site inspections and evaluate safe work methods in operation.
- Monitor compliance with Saudi Arabian Government regulations and SA requirements, including the adequacy of sanitation and first aid/medical facilities.
- Provide/assist with safety training for personnel.
- Meet and discuss with the SAPO, regarding injury or death of personnel, damage to equipment, loss of process or damage to the environment.
- Obtain and circulate relevant safety information applicable to personnel.
- Attend safety meetings and report on-job safety performance.
- Participate in incident investigations, drills, etc., and conduct/facilitate safety training sessions.

7.6 Site Supervision

The contractor's site supervision (field engineers, supervisors, foremen or equivalent position) shall visibly demonstrate the priority of safety in all activities, including setting a good personal example and as follows.

- Be qualified, proficient in both verbal and written English, provide direct and effective on-site supervision and be continuously present on-site.
- Be empowered in writing by their management to stop their own work and work related to the contract that they deem to be unsafe and to take immediate corrective actions as needed.
- Understand the safety and health requirements of the contract - in particular Schedule "D" and this document- as well as the contractor's CSSP and/or HIP.
- Assess the workplace and work activities to determine hazards that are present or are likely to be present, in consultation with the safety manager/supervisor(s) or field safety officer as needed.

Saudi Aramco: Company General Use

- Evaluate hazardous operations and implement needed precautions to ensure the safety of all affected personnel (note: hazardous operations may include, but are not limited to: welding, radiography, abrasive blasting, asbestos removal, electrical work, solvent cleaning, crane operations, etc.).
- Understand the safest method of performing each job activity in their area of responsibility.
- Provide instructions to their personnel on proper work methods, sequence of operations, potential hazards at each stage and precautions to follow.
- Inform their personnel of safe work methods and safety requirements detailed in the CSSP and/or HIP prior to beginning a different work activity (i.e., conduct prejob "toolbox" craft safety meetings).
- Use only trained personnel who are properly qualified for the work to be performed.
- Ensure that equipment operators operate only the specific equipment for which they have been trained and/or certified.
- Plan and maintain good housekeeping in the work area.
- Coordinate with subcontractors and other contractors on-site to avoid confusion in areas with joint or overlapping responsibility or joint occupancy (note: this includes work that may be separate and unrelated).
- Position temporary equipment to avoid safety hazards.
- Provide the required PPE and ensure proper use.
- Ensure equipment and tools (both power and hand tools) are in good operating condition and properly used.
- Train their personnel on emergency response procedures/plans.
- Provide immediate assistance as requested by the contractor's safety manager/supervisor, emergency response organizations, SAPO, etc., during emergencies.
- Conduct weekly safety meetings for their personnel.
- Conduct daily work site inspections to identify and immediately correct unsafe acts, conditions and/or equipment.
- Document and coordinate safety inspection activities and findings with the safety manager/supervisor.
- Commend personnel who, by action and/or initiative, eliminate hazards.
- Immediately report all incidents, unsafe conditions and defects in equipment to the contractor's site management and the SAPO.
- Participate in incident investigations, safety meetings, drills, etc., and conduct/facilitate safety training sessions.

Saudi Aramco: Company General Use

7.7 Field Safety Officer

The contractor's field safety officers (safety inspector, site safety engineer, safety advisor, safety representative or equivalent position) shall visibly demonstrate the priority of safety in all activities, including setting a good personal example and as follows:

- Be empowered in writing by their management to stop their own work and work related to the contract that they deem to be unsafe and take immediate corrective actions.
- Understand the safety and health requirements of the contract - in particular Schedule "D" and this document- as well as the CSSP/HIP.
- Communicate safety rules and standards to the contractor and subcontractor workforce.
- Inspect the work site daily, report any unsafe acts/conditions to the supervisor and/or foreman, provide recommendations to correct deficiencies and follow-up to ensure corrective actions have been taken.
- Participate in incident investigations, safety meetings, drills, etc., and conduct/facilitate safety training sessions.

7.8 Equipment Manager/Supervisor

A. The contractor's equipment manager/supervisor or equivalent position shall ensure that all equipment purchased, rented or leased:

- Has proper guarding for electrical, mechanical and chemical hazards.
- Is equipped with required safety devices.
- Has required testing laboratory stamps, labels and certifications affixed.

B. The equipment manager/supervisor shall visibly demonstrate the priority of safety in all activities, including setting a good personal example and as follows:

- Attend and participate in safety meetings.
- Verify heavy equipment operators are certified as required by SA.
- Ensure compliance with the requirements of GI 7.024 through GI 7.031 as applicable.
- Ensure hand-held electrical equipment and power tools are rated at 110 volts.
- Ensure tools constructed of good quality materials are used. Use of "homemade" tools is prohibited.
- Ensure periodic tests, inspections and maintenance of equipment are carried out when due and records are properly maintained and available for review by the SAPO.

Saudi Aramco: Company General Use

- Ensure equipment defects are promptly repaired and defective equipment is immediately "red tagged", removed from service and discarded/destroyed.

7.9 Contractor Personnel

Contractor personnel shall visibly demonstrate the priority of safety in all activities and shall:

- Be empowered in writing by their management to stop their own work and work related to the contract that they deem to be unsafe (without fear of retribution).
- Immediately report all incidents or hazardous conditions to their supervisor.
- Never endanger themselves or their fellow workers, including refraining from horseplay.
- Take and pass required job-skills/craft training and safety training.
- Understand safety rules, safe work practices and follow special safety precautions (e.g., in SA restricted areas).
- Properly use the correct tools and equipment for the job.
- Keep tools in good condition and repair.
- Properly use the correct PPE.
- Never remove, modify or abuse safety devices, equipment and welfare facilities.
- Attend and participate in safety meetings, "toolbox talks", safety training, etc.
- Obey posted warning signs.

8.0 Personnel Qualifications, Training and Certification

8.1 General

A. Contractor shall ensure that all its personnel are qualified, competent and have demonstrated they have the necessary knowledge and skills to safely and properly perform their assigned work.

B. Contractor shall ensure their personnel receive documented training, based on job classification and training needs analysis, before being permitted access to the work site. This training shall include: (1) safety orientation, (2) job-specific safety training and (3) job-skills/craft competency training for personnel engaged in specific craft activities (e.g., electrical, scaffolding, steel erection, welding, cutting, crane/heavy equipment operation).

Saudi Aramco: Company General Use

C. Contractor shall establish job classifications (e.g., welder, rigger, crane operator, heavy equipment operator, driver) required to perform the work and the specific job skills/craft competence and training requirements for each of these job classifications, including Saudi Aramco and/or Saudi Arabian Government certification/license requirements.

D. Where a specific job function requires SA and/or Saudi Arabian Government certification/license, these job functions shall be assigned only to properly certified/licensed personnel (e.g., certified crane/heavy equipment operators per GI 7.025, certified scaffold supervisors/inspectors per GI 8.001).

E. Contractor shall establish additional training programs for personnel who perform high-risk activities, such as but not limited to: confined space entry, fire watch, isolation and lock-out/tag-out, working on or near energized electrical equipment, working at height, lifting and rigging, excavation, specialized power tools and equipment, handling of hazardous chemicals, waste storage and handling, etc.

F. Contractor's in-house or third-party training shall include:

- Training facilities complete with multimedia (audio/visual) resources.
- Qualified instructors to ensure personnel properly receive the required training.
- Verbal instruction and written materials in a language clearly understood by the personnel receiving the training.
- Documented post-training competency assessments.
- Documentation of completed safety training (e.g., pocket card, "safety passport" or file copies of training records).

G. Personnel shall maintain the required SA and/or Saudi Arabian Government certification/licenses in their possession at all times.

H. Contractor shall work closely with their subcontractors to provide training programs to ensure that subcontractor personnel have the necessary knowledge and skills required to safely and properly perform the assigned work.

8.2 Safety Orientation for Contractor Employees

A. Contractor companies shall ensure that their employees and subcontractor employees who are new to a particular work site attend and pass their own company's safety orientation, as well as any facility safety orientation that may be required by the SAPO.

B. The contractor's safety orientation program shall include an overview of relevant requirements in the SA *Safety Handbook* and *Construction Safety Manual* (CSM).

Saudi Aramco: Company General Use

C. The contractor's safety orientation program shall include, but not be limited to, the applicable topics shown in Table 8.1.

Table 8.1 Contractor's Safety Orientation Topics

Alarms and notifications	Incident reporting procedures
Assembly points	PPE
Basic safety rules	Smoking restrictions and locations
Break areas	Stop work authority
Emergency response procedures	Traffic rules and restrictions
Hazard Recognition	Understanding safety signs and Warnings
Heat stress precautions	Work permits
Hydrogen sulfide (H2S) safety	

8.3 Short Service Employee (SSE) Program

A. Contractor shall establish a short service employee (SSE) program. This program shall include identification of new or inexperienced personnel so others may take extra care in their presence and provide additional assistance.

B. The SSE program shall define the criteria for an inexperienced worker based on duration of employment, change of job scope and/or length of industry service.

C. All new or inexperienced workers shall be classified as a SSE for a predetermined duration (e.g., 3-6 months) and shall be assigned a mentor during this time.

D. All SSE's shall continuously wear a visual identifier while at the job site (e.g., orange hard hat). The SSE visual identifier to be used shall be approved beforehand by the SAPO.

E. Before work commences, contractor shall inform the SAPO of the maximum ratio of SSEs to experienced workers that will be present at the job site at any given time. The SAPO reserves the right to require an alternate maximum ratio of SSEs.

F. Supervisors shall observe their SSE's work performance until they are satisfied that the employee can perform their job in a safe and effective manner.

G. The SSE program shall provide additional training as requested by the supervisor.

Saudi Aramco: Company General Use

8.4 Job-Skills/Craft Competency Training and Safety Training

A. Contractor shall ensure that job-skills/craft and safety training fully qualify personnel to perform their job properly and safely.

B. Job-skills/craft competency training and safety training shall include, but not be limited to, the relevant topics listed in Table 8.2, depending upon the job scope and assigned responsibilities.

Table 8.2 Job-Skills/Craft and Safety Training Topics

Abrasive blasting	Basic life support (BLS)
Asbestos	Communications
Cartridge operated tools (Hilti)	Compressed gas cylinders
Concrete formwork/shoring	Confined space entry/rescue
Cranes and rigging	Emergency response procedures
Cutting, welding, brazing	Fall prevention/protection
Demolition	Falling object prevention/protection
Electrical systems/equipment	Fire prevention/firefighting
Elevating/lifting equipment	First aid
Excavations and shoring	Hazard recognition
Explosive materials	Hazardous chemicals
Gas testing	Heat stress
Hand tools and power tools	Housekeeping
Heavy equipment	Hydrogen sulfide (H2S)
Hydrotesting	Incident reporting/investigation
Ionizing radiation	Isolation/lockout/hold tag
Isolation and blinding	Job safety analysis (JSA)
Non-destructive testing (NDT)	Ladders
Painting and coating	Materials handling
Piling	Personal protective equipment (PPE)
Pipefitting	Respiratory protection
Plumbing	Vehicle/traffiddriving safety
Portable power tools	Work over water
Pressure testing	Work at heights
Scaffolding	Work permits

C. Contractors shall maintain training records for review by the SAPO upon request.

D. SA reserves the right to test/verify the job skills/craft competency and qualifications of contractor's employees and to remove any employee failing this test/verification.

Saudi Aramco: Company General Use

E. Safety training shall also address off-job hazards (e.g., seat belt use, cooking safety).

8.5 Refresher Safety Training

Refresher safety training shall be:

- Conducted at a frequency not less than that established by Saudi Arab Government regulations or SA requirements (note: in the event that refresher safety training is not covered by Saudi Arabian Government regulations or SA requirements, the SAPO or contractor shall document the refresher safety training frequency).
- Documented by the contractor, including the personnel that attended and passed refresher safety training.

8.6 Safety Training for Site Supervision and Safety Staff

A. Contractor shall ensure that **all** their site supervision and safety staff receive formal safety training, including a 24-hour (min.) OSHA, NEBOSH, NSC or other SAPO-approved equivalent safety training program. This training shall include a review of typical site hazards and safe work practices.

B. Contractor's site supervision and safety staff shall be trained in, but not be limited to, the following:

- The job-specific CSSP and HIP.
- The contract's safety requirements.
- Specific hazards and safe work practices associated with the job.
- Relevant sections of the SA *Safety Handbook* and the SA *Construction Safety Manual* (CSM).
- Injury/incident reporting and investigation.
- Applicable emergency response procedures.
- First aid and basic life support (BLS). Note: They shall have valid first aid and BLS certificates in their possession at all times.

9.0 Medical

9.1 General

Contractor shall provide for medical care of its employees according to requirements established by the Saudi Arabian Government Ministry of Health (MOH) and Saudi Arabian labor law, GI 150.002, the SA *Minimum Medical Standards Requirements* (MMSR) Manual and in accordance with this section. This medical care shall include, but not be limited to, first aid, urgent and emergency care, stabilization and immediate transfer of patients to hospital, inpatient/outpatient hospitalization and emergency and disaster response. Following is a summary of some of the requirements from the MMSR manual.

Saudi Aramco: Company General Use

9.2 Provision of First Aid

A. First aid, which is the immediate help provided at the work site to injured or seriously ill personnel prior to the arrival of professional medical assistance, shall be in strict compliance with the minimum requirements specified in Category D Facilities (Section 4) of the MMSR manual.

B. Contractor shall provide and maintain adequate first aid supplies for contractor and subcontractor personnel at all work locations per GI 150.002 and as follows:

- If fewer than 50 people are at a work site, provide at least one 10-unit first aid kiVcabinet. See GI 150.002 and the MMSR manual, Attachments 23 and 24, for the required contents of a 10-unit first aid kiVcabinet.
- If 50 people or more are at a work site, provide at least one 36-unit first aid kiVcabinet. See GI 150.002 and the MMSR manual, Attachments 23 and 24, for contents.
- If work is carried out at locations that are more than 300 m (1,000 ft) apart, a separate first aid kiVcabinet shall be provided for each group of workers.
- The contractor shall assign first aid attendant(s) to be responsible for each first aid kiVcabinet and to ensure there is sufficient stock of all supplies at all times.
- Signs/notices shall be posted near each first aid kiVcabinet stating the following:
  - Name of person(s) who is in charge of the first aid kiVcabinet.
  - Hospital where injured/ill personnel are to be transported.
  - Telephone number(s) of doctor(s) or first aid attendant(s).
  - Emergency telephone number(s).

C. First aid supplies shall be kept readily available in a first aid kiVcabinet designated for those supplies only. First aid supplies shall be kept in a sanitary condition at all times.

D. Contractor shall provide an adequate number of personnel at each work site who are trained in first aid and BLS, including those in charge of first aid supplies. See GI 150.002 for training requirements.

Saudi Aramco: Company General Use

E. One four-wheel drive vehicle equipped with a well-stocked first aid kit for each crew shall be available for personnel performing pipeline or power-line work, or who are working in remote areas. These vehicles shall be marked to indicate they carry a first aid kit. A minimum of one person in every remote area crew shall have a valid first aid/BLS certificate.

F. A medical logbook shall be maintained at each first aid station and medical facility by the first aid attendant who shall log all injuries/illnesses treated. See the MMSR manual for a sample log.

G. Contractor shall provide Automated External Defibrillators (AEDs) as required by GI 150.002 and the MMSR manual. At each site with an AED, contractor shall provide an adequate number of personnel who are trained in AED operation.

9.3 Work Site Medical Facilities (Clinics)

A. Contractors employing more than fifty (50) total people for a given project (whether working on multiple shifts or not), including personnel employed by the contractor's subcontractors, shall contractually arrange with a SA medical designated facility (MDF), or other medical facility recommended in writing by Johns Hopkins Aramco Healthcare (JHAH), to establish, supply, staff and operate one or more work site medical facilities (clinics) as required by the MMSR manual.

B. Work site medical facilities (clinics), as defined in the MMSR manual, shall be either:

- Category A (Physician operated - Large).
- Category B (Physician operated - Small).
- Category C (Nurse operated).

C. The category of a work site medical facility (clinic) shall be in accordance the Initial Category/Level Evaluation Form (Section 2) in the MMSR manual, which is based on the following criteria:

- Number of personnel at the work site.
- Remoteness of the work site and access to definitive medical care (e.g., hospital).
- Potential risk factors at the work location.
- Specialized services required (medical procedures, diagnostics or otherwise).

D. If approved in writing by the SAPO, the contractor for a non-construction contract is not required to provide a work site medical facility (clinic) for office personnel (e.g., working in an office building within a major metropolitan

Saudi Aramco: Company General Use

area) if the contractor has contractually arranged for emergency response and medical care with a nearby hospital that is operated 24-hours a day, seven days a week and is capable of responding to the office building within a maximum travel time of ten (10) minutes.

E. Work site medical facilities (clinics) shall be fully established and in operation before work begins and shall:

- Have the capability to provide first aid, urgent care, prehospital and resuscitation care, stabilization and prompt transfer to the nearest hospital.
- Have a building that complies with the building specifications and acceptable floor configurations in the MMSR manual. The floor plan and specifications of all new work site medical facilities (clinics) shall be submitted to the SAPO and approved by SA prior to use.
- Have an emergency response plan (ERP) detailing the response capabilities specific to the geographical location. A medical emergency and disaster call-out list shall be posted in the work site medical facility (clinic). Each facility shall have at least one emergency response bag as specified in the MMSR manual.

F. The contracted MDF or other medical facility shall provide, in addition to qualified manpower (see Section 9.4) and proper supplies, all medical services required to operate the work site medical facility in accordance with the MMSR manual. This operation shall include, but not be limited to, providing the following services: clinic supervision, medical referral and consultation, pharmaceutical (drug formulary, storage, administration, dispensing and disposal), medical equipment and equipment maintenance, medical transportation, emergency/disaster response planning and training, healthcare policies and procedures, and other needed general and technical medical support services, including medical training to the contractor's employees.

G. Contractor shall make arrangements to have each work site medical facility (clinic) independently inspected/audited prior to startup and at least semiannually thereafter. These inspections/audits shall be performed by medically qualified personnel from the contracted MDF or other medical facility used by the contractor for its work site medical facilities (clinics), but shall not be personnel who staff the specific work site medical facility being inspected/audited.

H. These inspections/audits shall use the Survey and Compliance Review Report (Sections 3 and 4) in the MMSR manual, including during initial setup of a medical facility (clinic). The clinical and technical parts of the survey shall be performed by medically qualified personnel. The contractor shall be responsible for promptly correcting **all** deficiencies or violations identified by any such inspections/audits. Initial and periodic inspections/audits shall cover all areas mentioned in this Section 9.0 and the MMSR manual, including:

Saudi Aramco: Company General Use

- General health care requirements.
- Building specifications.
- Manpower requirements.
- Staff qualifications, continuing education and training.
- Safety, environmental, health and infection control requirements.
- Medical equipment and supplies.
- Pharmaceutical Services.
- Support services (communications/ambulance/janitorial services).
- Medical emergency and disaster response procedures/Medevac procedures.
- Health care policies, procedures and scope of service.
- First aid kit/cabinets required, including an Automated External Defibrillator (AED).

I. Contractor shall ensure that drug formulary, prescription, supplies, storage, administration and dispensing shall be under the supervision of a licensed pharmacist or physician from the contracted MDF or other medical facility used by the contractor for its work site medical facilities (clinics).

J. Contractor shall ensure it has or has arranged to have in place the necessary support services required to comply with the requirements in the MMSR manual, including safety, environmental health and infection control (e.g., disposal of medical waste), equipment management, janitorial services and communication services.

K. Work site medical facilities (clinics) shall be subject to inspection by SA. The contractor shall be responsible for promptly correcting any deficiencies or violations identified by SA following any such inspections/audits.

9.4 Medical Professional Personnel

A. Contractor shall contractually arrange with a SA-contracted MDF, or other medical facility recommended in writing by JHAH, to provide qualified medical professional personnel as per the MMSR manual to staff each work site medical facility (clinic).

B. Medical professional personnel (e.g., physicians, nurses) shall at a minimum meet the licensing requirements of the Saudi Arabian Government MOH Saudi Council for Health Specialties (SCFHS) and shall possess the necessary experience, training, minimum qualifications and required certifications as specified in the MMSR manual.

Saudi Aramco: Company General Use

C. The names, qualifications and MOH certificates of the medical professional personnel who will staff a medical facility (clinic) shall be submitted to the SAPO for review before work begins.

D. Contractor shall have arrangements in place with the contracted MDF or other medical facility used by the contractor for its work site medical facilities (clinics) to provide medical professional personnel coverage for unplanned emergencies, holidays, sickness, off-duties, absences and other unplanned events.

E. Medical professional personnel shall be provided with periodic mandatory and continuing education by their employer as required by the MOH. This continuing education shall include, but not be limited to: first aid/BLS, safety and infection control, heat stress, fire and disaster training, etc.

F. Contractor shall make arrangements with the contracted MDF or another medical facility (e.g., hospital) for consultation services so a qualified physician (specialist or otherwise) can be consulted by the work site medical facility's staff 24 hours a day, seven days a week for medical advice, prescription of drugs, referral and/or transfer of patients as needed.

G. All medical professional personnel shall receive disaster training at least annually. Training shall include the application of the commonly used triage system in disaster management, communication strategies and participation in at least two disaster drills per year.

9.5 Medical Insurance and Ambulance(s)

A. To facilitate and expedite patient transfer and admission to a nearby hospital for definitive care and to comply with the Saudi Arabian Government's medical insurance laws, contractors shall ensure all their employees, including subcontractor employees, are continuously provided with valid medical health insurance coverage, before they enter the work site, for outpatient, first aid, emergency, specialist and inpatient care at a nearby hospital that is operated 24-hours a day, seven days a week. Contractor shall submit documentary evidence of current medical health insurance coverage for its employees to the SAPO monthly and upon request.

B. Contractors shall provide or make arrangements to provide a dedicated, full-size emergency vehicle (ambulance) at each work site medical facility (clinic) to transport injured/ill personnel to the nearest hospital. If the work location is off road, the contractor shall provide a four-wheel drive ambulance.

C. Ambulances shall comply with the vehicle specifications in the MMSR manual and shall be maintained in a safe, clean, sanitary and roadworthy condition in compliance with Saudi Arabian Government regulations and SA vehicle requirements. Ambulances shall be provided with a dedicated shaded parking space.

Saudi Aramco: Company General Use

D. Ambulances shall have purpose markings, be configured safely and be equipped, at a minimum, with emergency and resuscitation supplies as specified in the MMSR manual.

E. A daily ambulance log and ambulance preventive maintenance work sheet shall be maintained (see the MMSR manual for samples).

F. Contractors shall provide ambulance drivers with first aid/BLS training, site orientation and medical facilities location training.

G. Ambulance drivers shall be qualified as per the MMSR manual and shall have a valid Saudi Arabian Government driving license.

9.6 Air Medical Evacuation (Medevac)

A. Contractor shall ensure that needed Medevac procedures are incorporated into their emergency response procedures as a part of their CSSP.

B. Procedures to initiate a Medevac are in GI 1321.015.

10.0 Site Planning, Usage and Housekeeping

10.1 Initial Site Planning

A. Prior to start of on-site work, the contractor shall determine what personnel, equipment, procedures, etc., will be needed and how they will be provided in order to ensure that the work will be conducted in a safe manner.

B. The contractor's initial site planning shall consider, but not be limited to, the following topics:

- Site location-offices, worker camps, etc. (see Sections 10.0 and 11.0).
- Heavy equipment, chemicals, demolition, welding, nondestructive testing (NDT), etc.
- Personal protective equipment (PPE).
- Emergency response procedures.
- Work permit requirements.
- Control of falling objects.
- Required barriers.
- Medical and first aid resources needed (see Section 9.0).
- Heat stress management and prevention.
- Fire/drinking/sanitary water supply and distribution.

Saudi Aramco: Company General Use

- Transportation (see Section 4.15).
- Excavations.
- Electrical tools and services.
- Scaffolding and work at heights.
- Safety staff (see Section 4.5).

Note: Some of the above topics are covered in further detail elsewhere in this manual.

10.2 Site Planning and Layout

A. Site planning shall include, but not be limited to: building spacing, fire protection, welfare facilities, rest areas, recreational facilities, assembly areas, offices, living quarters, medical facilities, dining facilities, prayer areas, laydown yards, fabrication shops, etc.

B. The site layout shall be planned before mobilization to the work site to identify issues such as, but not limited to: emergency access routes, normal traffic flow, parking areas, siting for cranes, staging areas, material storage, sanitation/welfare facilities, first aid stations/medical facilities, fixed/portable fire protection, utilities, etc.

C. Access road planning shall include, but not be limited to: traffic flow, load-bearing capacities, traffic signs and controls, road striping, parking areas, road intersections and multiple-use roads. Emergency response vehicle access shall be provided at all times to all locations.

D. Contractor shall provide adequate shelters/rest facilities and drinking water supply at construction sites and work locations, including as needed for prevention of heat stress.

10.3 Plans for Contractor Camps and Project Support Facilities

A. Contractor shall prepare comprehensive plans for all contractor camps and project support facilities that incorporate the requirements from the above planning and are in accordance with Section 11.0. These plans shall address, at a minimum, the following as applicable to the contract:

- Plot plans and building layouts, which for contractor camp facilities shall show the camp site layout including medical, dining, recreation and toilet/shower facilities.
- Interior building layout/space utilization, which shall show site offices, conference rooms, prayer rooms, open office space for clerks, partitioned office spaces, kitchens, storage areas, etc. For contractor camps, interior building layouts shall show dormitory room planned occupancy and furniture layout.

Saudi Aramco: Company General Use

- Building architectural/structural design features, including materials of construction.
- Building fire protection and alarm systems.
- Blast resistance features (if located within a blast hazard zone as per SAES-B-014).
- Building air-conditioning, heating and ventilation distribution systems, including temperature control and equipment sizing calculations.
- Electrical power distribution systems.
- Electrical outlets per room (number and location shall be sufficient to safely accommodate personal electronics needs, such as TVs, mobile phone chargers, radios, etc.).
- Building and area lighting.
- Communications systems, data cabling and equipment.
- First aid, ambulance and medical services/clinics.
- Fire prevention and fire fighting provisions.
- Raw water treatment and drinking water supply.
- Sewage/waste water collection, treatment and disposal.
- Sanitation plan, including refuse handling requirements and waste management facilities.
- Storage, shop, fabrication areas.
- Roads and parking areas.
- Provisions for vehicle repairs, service and maintenance.
- Site lunch shelters.
- Site security fencing.

B. Contractor shall submit three copies of all contractor camp and project support facility plans to the SAPO for review within fifteen (15) working days of contract execution. Construction shall not start on the contractor camp or project support facility until the plans have been reviewed and approved per GI 298.010.

10.4 Land Use Permit

A. Whenever a contractor camp or project support facility is needed, the contractor shall obtain, through the SAPO, any required land use permit (LUP) prior to the commencement of any work activity at the site.

B. The LUP application shall be in accordance with GI 2.716 and GI 2.718. The LUP application (SA Form 8037) shall specify the maximum number of occupants and shall include plans of the proposed contractor camp and project support facilities, as specified in Section 10.3.

Saudi Aramco: Company General Use

C. Contractor shall comply with all conditions stated on the SA LUP.

D. If required, a letter of understanding per GI 2.718 for contractor site allocation shall be signed by contractor and contractor shall comply with all conditions stipulated therein.

10.5 Project Signs

A. A job activity information sign (e.g., see Figure 10.1 below) shall be erected at the main entrance(s) to the job site and shall comply with the requirements of this section.

B. At a minimum, the following information shall be shown on project signs:

- SAPO name.
- Project title.
- Budget item (BI), job order (JO) or contract number.
- Prime contractor name, address and telephone number.
- Emergency contact numbers for SAPO and contractor representatives.

Figure 10.1 Example Job Activity Information Sign

SA/CENTRAL AREA PROJECTS
SA-BUILT GOVERNMENT SCHOOLS
BOYS SECONDARY - DAMMAM
BI# 2510
CONTRACTOR:
NAME
P.O. BOX
LOCATION
TELEPHONE NUMBER
SA REPRESENTATIVE
TEL. – OFFICE/TEL. – MOBILE –

C. The design of project signs shall be:

- A minimum of 1.2 m (4 ft) high and 2.4 m (8 ft) wide.
- Printed in black and white.
- Printed in Arabic and English, with the Arabic text located above or to the right of the English text.

D. Sufficient signs shall also be erected and maintained on or near the site to direct delivery vehicles and visitors to the work area.

Saudi Aramco: Company General Use

E. Other signs, such as safety warnings, may be required (e.g., by the SAPO).

10.6 Entry and Exit

Safe entry and exit points shall be provided at work sites. Entry and exit points shall be kept clear and unobstructed at all times.

10.7 Pedestrian Pathways On-Site

On-site dedicated pedestrian walkways/pathways shall be clearly marked and distinct from vehicular travel routes. Physical barriers shall separate parallel personnel walkways/pathways from adjacent vehicular and heavy equipment traffic.

10.8 Barricades

Barricades shall be provided where required. Barricades shall be clearly marked with flagging. Barricades shall have protective lighting, when necessary.

10.9 Site Drainage

Sites shall have good drainage and be graded so water does not pool on job sites, camps, roads, etc.

10.10 Fire Protection and Prevention

A. Contractor shall provide firefighting equipment (e.g., fire extinguishers, hydrants, hoses, sprinklers, alarms) as specified in SAES-M-100, or if applicable, SAES-B-019. See Section 11.6 for fire water system requirements, as applicable.

B. Firefighting equipment shall be readily available and accessible. Areas around fire extinguishers, hydrants, hoses and other firefighting equipment shall be kept clear.

C. Fire extinguishers, hydrants, hoses and other firefighting equipment shall be regularly inspected (i.e., per GI 1781.001) and maintained. Contractor shall provide fire equipment inspection and maintenance records to the SAPO upon request.

D. Designated site personnel shall be trained in the use of the various types of firefighting equipment on-site. See Chapter 1-7, *Fire Prevention,* of the CSM for further details.

Saudi Aramco: Company General Use

E. Smoking shall be permitted only in designated areas.

10.11 Materials Storage Yards

A. Flammable and combustible material storage areas within materials storage yards shall be clearly marked and adequate in size and layout.

B. Material storage yards shall not be closer than 15 m (50 ft) to any other structure.

C. For further information, see Chapter 1-12, *Materials Handling,* of the CSM (including an example of a proper material storage yard layout drawing).

10.12 Site Illumination and Electrical

A. Adequate lighting shall be provided per SAES-P-123.

B. Grounding for electrical tools and wiring installations shall be in accordance with SAES-P-111.

C. Contractor shall comply with the National Fire Protection Association, NFPA 70, *National Electrical Code (NEC),* and SA's electrical safety requirements.

10.13 Security Fencing

A. Contractor shall provide, install and maintain required temporary security fencing in accordance with SA requirements (e.g., SAES-M-006).

B. Fences shall be properly designed, grounded, of sound construction, appropriate for the intended purpose and built in accordance with SA requirements (e.g., SA standard drawing AB-036677, "An Overview [Architectural] Saudi Aramco Security and General Purpose Fencing").

C. Fences shall be periodically inspected.

D. Existing roadways and pedestrian walkways crossing the work site shall be rerouted outside the work site perimeter fence prior to the start of work.

E. Red and white, blue and white, or black and reflective yellow (or white) flags shall be fastened to the fence when a fence crosses an existing road.

F. Dead-end signs shall be erected on the approach to fences if access is blocked. The distance to the blocked access shall be noted on the sign. However, if there is a temporary bypass, a "DIVERSION AHEAD" sign, with diversion arrows showing the proper route, shall be erected on the approach to the fence in black and yellow (or white) reflective material.

Saudi Aramco: Company General Use

G. At least two access gates 4.5 m (15 ft) wide, located at opposite ends, shall be provided to the site. Access gates, where possible, shall avoid opening onto main thoroughfares.

H. Standard Saudi Arabian Government-compliant stop signs shall be attached to vehicle access gates.

I. Temporary signs shall be erected to route traffic in the safest manner to, from and within the site. Temporary signs shall not be placed on public highways and roads (refer to Saudi Arabian Government traffic regulations).

10.14 Securing Site and Equipment after Working Hours

A. Power-driven construction equipment shall have the ignition locked and key removed when not in use.

B. Heavy equipment that will be left unattended overnight shall be made immobile by disconnecting the battery or by other appropriate means if thereis no lock for the cab and the engine compartment access is readily available.

C. Bulldozer blades, front loader and backhoe buckets and similar pieces of equipment shall be lowered to the ground when not in use.

D. Excavations or obstructions creating hazards to pedestrian or vehicular traffic at night shall have adequate lighting. Warning signs shall be posted on approved types of barricades (see GI 1021.000).

E. Contractor shall provide night watchmen and security personnel as needed to control access to the site after hours.

10.15 Manholes and Covers

Open manholes and openings in grating on elevated levels shall be properly barricaded. Hard barricades and warning signs shall be installed prior to removing a manhole cover or grating. Manhole and grating shall be immediately put back in place upon completion of the work activity.

10.16 Guy Lines/Ropes

Temporary guy lines and barrier ropes shall be clearly marked with reflective tape and/or signs and barricades provided to protect them, when needed.

10.17 Road Closures

Road closures shall be performed in accordance with Saudi Arabian Government regulations and SA requirements, including GI 1021.000.

Saudi Aramco: Company General Use

10.18 Dust Control

A dust control program shall be identified in the HIP, developed and implemented to protect personnel and the general public.

10.19 Protection of the General Public

The general public shall be protected from exposure to hazards associated with the contractor's work activities such as, but not limited to, abrasive blasting, radiation, painting, excavations and traffic routing.

10.20 Housekeeping

A. Contractor shall provide for:

- Cleaning of the entire site, including identifying areas where each subcontractor is responsible for the cleaning.
- Collection, storage and disposal of nonhazardous and hazardous waste in accordance with GI 430.001.
- An adequate amount of trash receptacles in work areas.
- Keeping waste segregated at all times in accordance with waste handling requirements (see GI 430.001).

B. The contractor's site supervision shall ensure that trash and debris is properly collected and disposed of daily.

C. Trash containers shall be of durable construction and shall be located as needed throughout the work area. Trash containers shall be covered, clearly marked and emptied daily. Separate trash containers, with suitable disposable plastic liners, shall be provided for food scraps and other organic matter.

D. Refuse, trash and garbage shall only be disposed of at approved sites as designated by SA or local municipality.

E. Excavation spoils and building materials shall only be disposed of at other approved sites as designated by SA or local municipality.

F. Contractor shall establish a site-specific waste management plan, which shall include specific procedures for disposal of any hazardous wastes (e.g., waste oil, sewage, naturally occurring radioactive materials [NORM]), in accordance with Saudi Arabian Government regulations and SA Environmental Protection Department (EPD) requirements. Contractor shall submit their site-specific waste management plan to the SAPO for review. The SAPO reserves the right to forward a copy of the waste management plan to EPD for review.

Saudi Aramco: Company General Use

11.0 Contractor Camps, Project Support Facilities, and Temporary Construction Facilities

11.1 General

A. Contractor shall ensure contractor camps/compounds, project support facilities and temporary construction facilities(e.g., site offices, storage/laydown yards, fabrication/maintenance shops, medical/clinics) that are provided for contractor's personnel, subcontractors' personnel and/or SA employees comply with the provisions of the Saudi Arabian Labor and Workmen Law and SA's safety, health and environmental requirements, including Section II of Schedule "D", GI 298.010, GI 1781.001, the SA Environmental Health Code (SAEHC), GI 151.006, and SA SMG 07-005-2012, or their replacements as amended from time to time.

B. SA will inspect and periodically reinspect any contractor camp, other project support facility or work site, on or off SA property, for compliance with applicable laws and SA's safety, health and environmental requirements. Corrective actions shall be taken as noted.

C. Contractor camps and project support facilities shall be located so as to minimize exposure to hazards (e.g., located upwind from process areas and well sites), including traffic hazards to work site(s). SA shall approve the location of contractor camps and project support facilities prior to their construction, as per Section 10.4.

D. Buildings, including portable buildings, are not allowed within 500 m (1,640 ft) of a plant perimeter fence, pipeline corridor or well site without SA's written permission. See SAES-B-014, SAES-B-055, SAES-B-062 and SAES-B-064 for additional facility siting requirements.

E. Contractor shall furnish, install and maintain a fire alarm system for all contractor camp and project support buildings as required by SAES-M-100.

F. Contractor shall provide designated outdoor smoking facilities within contractor camp and project support facilities. Only smoking facilities approved by the SAPO shall be used by workers on jobs located within a SA plant or hazardous area.

G. Contractor shall provide, install, operate and maintain potable water supply and distribution system(s) in accordance with Section 01, *Water,* of the SA Environmental Health Code (SAEHC). Potable water systems shall have sufficient storage capacity for providing acceptable potable water supply as required for contractor camp and project support facilities, as well as at construction sites and other work locations. Potable water shall have a residual chlorine level of between 0.5 ppm minimum and 3.0 ppm maximum. See Section 11.7.

Saudi Aramco: Company General Use

H. Prior to occupancy and connection of utilities, contractor camp and project support facilities shall be subject to inspection by the SAPO, LP, Fire Protection Department, Inspection Department (electrical, mechanical, plumbing), EPD, JHAH, and shall meet all applicable safety, fire and health standards. Any concerns generated during the inspection or otherwise brought to the attention of the contractor shall be promptly and satisfactorily resolved prior to occupancy.

I. For contractor camps and project support facilities, a dedicated and properly trained maintenance crew shall be available 24 hours per day. The names and contact information for these maintenance personnel shall be prominently displayed within the camp/facility.

J. High risk maintenance activities (e.g., confined space entry, electrical isolation, rigging and lifting) at contractor camps and project support facilities shall be controlled (e.g., by developing JSAs, using work permits, or issuing procedures).

11.2 Contractor Camp General Requirements

A. Contractor shall design and construct structures and buildings to meet the requirements of SAES-M-100.

B. Contractor shall provide a camp(s) to adequately house anticipated staff and labor force. Depending on the nature of the contract these camps may also house SA and subcontractor personnel in addition to contractor personnel.

C. Contractor shall operate and inspect (with corrective actions), manage and maintain accommodation camps so as to ensure an acceptable standard of living, including proper facility maintenance, hygiene standards, fire and life safety, pest control and food safety in accordance with SAES-M-100, SAEHC-S-07 *(Camps and Communal Living Facilities),* and the contract. Facilities for sleeping, dining, medical, firefighting, sanitation and recreation, as well as barber shops, bakeries, grocery/convenience markets, cleaning/laundry services, etc., shall be provided in accordance with the requirements of this document, SAES-M-100, SAEHC-S-07, and the contract.

D. Sleeping and living areas within contractor camps shall be air-conditioned and periodically maintained on at least a biannual basis in accordance with the manufacturer's recommendations. The contractor shall submit to the SAPO a copy of the maintenance records, upon request.

E. Contractor camps shall include a fully equipped kitchen(s) and dining room(s) suitable for the preparation of high-quality meals per Section 07 of the SAEHC. Dining facilities shall be provided with tables, chairs, utensils and cutlery.

Saudi Aramco: Company General Use

F. Personnel housed in the contractor camp shall be provided with three ample and well-balanced meals per day.

G. Cooking shall not be allowed within contractor camp accommodation rooms per section 07 of the SAEHC. Use of hot plates, stoves, portable ovens, open-flame burners, etc., shall only be permitted in designated kitchen and break room areas. Use of smoking materials, including cigarettes, cigars, pipes, etc., and burning of candles, incense, etc., shall not be allowed inside any building.

H. Camp food establishments, grocery/convenience markets, etc., shall not sell raw meats, cooking oil, cooking pots and pans, cooking burners, hot plates or other food items and equipment that would enable camp residents to cook in their own rooms.

I. All buildings, including portable buildings, shall be equipped with hand-held fire extinguishers as per SAES-M-100 and SAES-B-019, as applicable.

J. Any personal electrical items offered for sale to camp residents (e.g., in a camp grocery market or convenience store) or used in the camp shall be labeled as meeting CE, Underwriters' Laboratories (UL) or Factory Mutual (FM) requirements (or equivalent as specified in writing by the SA Loss Prevention).

K. Contractor camps and project support facilities shall include adequate purpose-designed lighting for all streets, parking areas, sidewalks and around buildings and outdoor facilities.

L. Contractor camps and project support facilities shall be adequately drained on and away from the site.

M. Contractor camps and project support facilities shall include paved/designated streets and parking areas with a properly prepared and compacted base. Speed bumps/dips shall be installed on streets as required for pedestrian safety. The camp/support facility shall include paved/designated sidewalks for all areas to be utilized as pedestrian walkways and shall include small diameter crushed stone as ground cover in unpaved areas around all buildings.

11.3 Minimum Safety Standards for Contractor Camp Buildings and Project Support Buildings

A. The minimum clear spacing between non-combustible buildings larger than 548 m^2 (5,900 ft^2) and/or between clusters of smaller buildings totaling more than 548 m^2 (5,900 ft2) shall be 6.1 m (20 ft). The minimum clear spacing between smaller buildings and buildings within a cluster shall be 1.8 m (6 ft). The minimum clear spacing from perimeter fences to buildings shall be 3 m (10 ft). See SAES-M-100.

Saudi Aramco: Company General Use

B. The building's structural design shall be for applicable loads and in accordance with SAES-M-100, including wind loads per SAES-A-112. Building frames shall be supported on concrete footings.

C. Camp accommodation rooms shall have not less than 4.6 m^2 (50 $ft2$) of air-conditioned living area per person, preferably at least 6.5 m^2 (70 $ft2$) per occupant.

D. A separate bed shall be provided for each camp occupant. Triple deck bunk beds are not permitted.

E. Sleeping rooms shall have an emergency egress opening, which can either be an outward opening mandoor or a window that opens to the outside. Emergency egress openings shall comply with SAES-M-100 and shall be operational from inside the room without use of keys or tools. All operable windows in accommodation rooms shall be provided with an insect screen.

F. Newly installed, relocated or renovated contractor camp buildings and project support buildings, including portable buildings, provided for SA and/or contractor/subcontractor personnel shall comply with SAES-M-100 as explained in the SA Safety Management Guide, *Application of Saudi Aramco Building Code to Contractor Camp and Project Support Buildings.*

G. Any newly installed, relocated or renovated building, whether portable or fixed, that is located in a zone predicted to receive at least 3.5 kPa gauge (0.5 psig) peak side-on overpressure from a vapor cloud explosion shall be designed and constructed in accordance with SAES-B-014.

H. Pre-engineered modular buildings meeting SAES-M-100 equivalent standards of quality, durability, safety, sanitation and reliability may be proposed by the contractor for consideration by the SAPO. Proposals for pre-engineered modular buildings shall include the manufacturer's name, address, phone/facsimile numbers, Internet Web site address and sufficient product information to enable the SAPO to evaluate the suitability of such structures.

I. Pre-engineered modular buildings shall meet the following minimum requirements:

- Welded steel skids or attached running gear.
- 100 mm (4 inches) minimum wall thickness.
- Fully insulated walls and ceilings.
- Metal or other nonflammable roof materials.
- Suspended ceiling completely wired and plumbed with concealed wiring and plumbing.

Saudi Aramco: Company General Use

- Built-in circuit breaker panel and exterior electrical connection.
- Ground fault circuit interruption (GFCI) devices on all electrical outlets within 1.8 m (6 ft) of a water source (e.g., sink, tub, toilet, shower, etc.).
- Air conditioning and heating with individual controls to maintain temperature between 21 and 24 °C (70-75 °F).
- Offices with full height walls shall be lockable and have windows facing the outside of the building with blinds.

J. External egress doors shall swing outward and shall be provided with panic push bars as required by SAES-M-100. Internal doors shall be painted solid core with frame and door stopper.

K. Buildings and structures shall be electrically grounded. Metal enclosures of power distribution panel boards shall be connected to a grounding system.

11.4 Welfare/Sanitation Facilities

A. Contractor shall provide welfare facilities (e.g., toilet/washing facilities) for personnel at contractor camps, project support facilities and other work sites in accordance with GI 151.006 and Section 07, *Camps and Communal Living Facilities,* of the SAEHC.

B. Toilet facilities shall include western- and eastern-style toilets, urinals, ablution hoses, sinks, water heaters, air extractors, mirrors, toilet paper holders, paper towel holders, soap dispensers/dishes, coat hooks and garbage bins.

C. Toilets shall be provided, as a minimum, according to Section 07, Table 2, of the SAEHC.

D. Toilet facilities shall be easily accessible and shall be of durable and hygienic construction consistent with their purpose and shall have adequate lighting, ventilation and a continuous supply of water.

E. Washing facilities shall be provided in accordance with GI 151.006 and the SAEHC.

F. Toilets and washing facilities shall be continuously maintained in a clean and sanitary condition.

G. Potable (fresh) drinking water shall be readily available. Contractor shall provide conveniently located bottled drinking water dispensers. Only water bottles with tops that have been sealed by the supplier shall be used (i.e., bottles shall not be refilled except by the bottle supplier). Water bottles shall be routinely changed and all water dispensers shall be frequently cleaned to maintain a sanitary and fresh supply of drinking water in each dispenser. Common drinking cups or dippers are prohibited. Disposable paper cups or other separate cups shall be provided for each person.

Saudi Aramco: Company General Use

H. Sun-protected rest areas shall be provided and shall be away from operating equipment and work areas.

11.5 Electrical Power Generation and Distribution Systems

A. Contractor shall provide, install, operate and maintain power generation and distribution facilities at contractor camps, project support facilities and worksites, as needed.

B. The power system shall provide electrical power supply at 110 volts/60 Hz, on a 24 hour per day, 7 days per week basis, or as needed.

C. Power distribution panel boards shall be labeled to identify the service of individual breakers.

D. The entire electrical installation shall comply with the U.S. National Electrical Code (NEC) and be tested at least annually by a qualified electrical engineer from an independent source. The contractor shall submit to the SAPO a copy of the electrical test certificate, upon request.

11.6 Fire Protection Systems

A. Contractor shall design, install and operate a fire water system(s) with sufficient storage capacity to provide full fire protection coverage. Design plans for fire protection systems shall be submitted to the SAPO for review.

B. Inspection, testing and maintenance of fire alarm and protection systems, including sprinklers and portable fire extinguishers, shall be in accordance with GI 1781.001.

C. Dedicated fire water storage capacity shall not be used for any other purpose (e.g., drinking, bathing, ablution).

11.7 Raw Water Treatment and Drinking Water Supply Facilities

A. Contractor shall provide, install, operate and maintain all required raw water treatment facilities, potable water distribution systems, drinking water supply systems within the contractor's and subcontractor's assigned areas in accordance with Section 01, *Water,* of the SAEHC.

B. Plans for raw water treatment and drinking water shall be reviewed by the SA EPD prior to construction.

C. Contractor shall ensure that the bacteriological and chemical qualities of the drinking water, including during transportation and storage, are in accordance with Section 01, Table 10, of the SAEHC.

Saudi Aramco: Company General Use

11.8 Sewage and Solid Waste Management Facilities

A. Contractor shall provide, install, operate and maintain all required sanitary sewer systems at contractor and subcontractor assigned areas, including contractor camps and project support facilities, in accordance with Section 02, *Sanitary Wastewater and Sewerage Systems*, of the SAEHC. The contractor shall be responsible for installing all required sewage collection manholes and piping, etc.

B. Contractor shall remove all solid waste and debris from contractor camp and project support facilities on not less than a daily basis and dispose of it at a solid waste disposal facility approved by SA.

C. Plans for sewage collection, holding, treatment and final disposal and plans for solid waste management facilities shall be reviewed by the SA EPD prior to construction.

Saudi Aramco: Company General Use

Saudi Aramco
Work Site Safety Manual (WSSM)
Table of Contents

Part I. General Safety

1.	Emergency Reporting and Response	I-3
2.	Incident Reporting and Investigation	I-2
3.	Personal Protective Equipment (PPE)	I-10
4.	Work Permit System	I-6
5.	Isolation, Lockout and Use of Hold Tags	I-7
6.	Confined Spaces	I-16
7.	Fire Prevention	I-11
8.	Traffic and Vehicle Safety	I-4
9.	Compressed Gas Cylinders	I-4
10.	Hazardous Materials	I-14
11.	Hand Tools and Power Tools	I-18
12.	Materials Handline	I-7
13.	Heat Stress	I-11

Part II. Civil

1.	Excavations and Shoring	I-40
2.	Scaffolding	I-86
3.	Ladders and Stepladders	I-7
4.	Temporary Walking and Working Surfaces	I-5
5.	Fall Protection	I-10
6.	Concrete Construction	I-12
7.	Steel Erection	I-10
8.	Abrasive Blasting	I-5
9.	Painting and Coating	I-5
10.	Cutting, Welding and Brazing	I-10
11.	Roadworks	I-2
12.	Piling Operations and Cofferdams	I-6
13.	Explosive Materials	I-1
14.	Demolition	I-4
15.	Rope Access	I-10

Part III. Mechanical and Electrical

1.	Machine Guarding	I-3
2.	Mechanical and Heavy Equipment	I-8
3.	Electrical Equipment	I-18
4.	Pressure Testing	I-8
5.	Ionizing Radiation	I-3
6.	Non-Destructive Testing (NDT)	I-4

7. Cranes and Lifting Equipment I-11
8. Slings and Rigging Hardware I-14

Part IV. Operations

1. Diving Operations I-7
2. Marine Operations I-5
3. Drilling and Well Servicing I-1
4. Aviation I-4

1. Emergency Reporting and Response

1.1 Purpose

This chapter describes minimum requirements for emergency reporting, as well as for response actions during an emergency.

1.2 References

Saudi Aramco (SA) General Instructions (GIs):

GI 6.025, *Control of Remote Area Travel and Search/Rescue Procedures*

SA Safety Management Guide: Emergency Preparedness

SA Emergency Management Guide

SA Safety Handbook, *Minimum Safety Rules*

1.3 Emergency Response Plan

1.3.1 SA and contractor personnel shall be familiar with the following:

A. Specific facility emergency response plan.

B. Specific roles/responsibilities (e.g., for supervisors—to provide head counts).

C. Locations where resources are available.

D. Facility's audio and visual alarms.

E. Evacuation routes and procedures.

F. Assembly areas and shelters.

1.4 Emergency Reporting

1.4.1 All emergencies shall be reported immediately (e.g., to the nearest SA Security Main Gate or Security Control Center [SCC]).

1.4.2 Signs shall be conspicuously posted at the work site with the emergency telephone numbers and reporting instructions.

1.4.3 Reporting emergencies within Saudi Aramco shall be:

A. By telephone. Dial 911.

B. By radio. Radio an operations group that has a telephone and ask them to dial 911 if you cannot contact the Security Main Gate or SCC directly.

1.4.4 Reporting emergencies from outside SA or by mobile phone shall be:

A. Dial the following number depending upon the area:

Area RSCC	Dial 911 Number	Area RSCC	Dial 911 Number
Central Area RSCC	(013) 872-0911 Dhahran (013) 880-0911 (013) 876-0911 (013) 578-0911 Shaybah (013) 875-0911 Turaif (013) 877-0911 Al-Jawf	**Central Region RSCC**	(011) 285-0911 Riyadh (013) 574-0911 Pump Stations (013) 878-0911 Khurais (013) 578-1911 (013) 874-0911 Hawtah
Southern Area RSCC	(013) 572-0911 Abqaiq (013) 576-0911 Udhailiyah (013) 577-0911 Mubarraz (013) 862-0911 Shedgum (013) 873-0911 South Ghawar	**Western Region RSCC**	(012) 427-0911 Jeddah (014) 397-0911 Yanbu & Madinah (017) 310-0911 Jazan
Northern Area RSCC	(013) 378-0911 Tanajib (013) 379-0911 Manifa (013) 679-0911 Khursaniyah (013) 673-0911 Ras Tanura (013) 677-0911		

B. By messenger. Send a messenger to the nearest telephone, radio, SA Security Main Gate or SCC to report the emergency.

1.4.5 When transmitting a message by telephone, radio or messenger, ensure the following information is provided:

A. Exact location (e.g., plant, building or house number).

B. Nature of the emergency (e.g., fire, explosion or gas release).

C. Type of service required.

D. Number of injured personnel.

E. Telephone number you are calling from, if available.

F. Caller's name and badge number.

Note: Stay on the telephone or radio until told to hang up. *Repeat the message if asked to do so.* If possible, post a lookout to direct the ambulance, fire truck, helicopter or other response vehicle to the right location.

1.5 Actions to be Taken During Emergencies

1.5.1 This section lists primary actions for personnel not involved with emergency response. Whether a responder or not, all personnel shall be knowledgeable of the minimum requirements that are specific to each operating facility/area during an emergency.

1.5.2 The actions that shall be performed by personnel not involved with emergency response that are common across all SA facilities/sites are as follows:

A. Upon hearing an emergency alarm, personnel shall:

- Stop all work immediately.
- Safely shut down all equipment.
- Evacuate to the predetermined assembly point.

B. Supervisors shall:

- Stop all work immediately and cancel work permits.
- Safely shut down all equipment.
- Evacuate all personnel to a predetermined assembly point or shelter area.
- Conduct a roll call or head count to account for every person. In the event a person is missing, their name and last known location shall be communicated to the Incident Commander immediately.
- Prevent personnel from returning to work until notification has been received from the SA proponent organization (SAPO).
- Revalidate all work permits prior to commencing work.

Contractors shall provide home and mobile telephone numbers (and those of replacements) to the SAPO for emergency contact after hours for incidents involving the contractor's job, personnel or equipment. These telephone numbers shall be kept current and posted at the job site.

2. Incident Reporting and Investigation

2.1 Purpose

This chapter describes requirements for reporting and investigating incidents that occur on Saudi Aramco (SA) property or on SA projects.

2.2 References

SA General Instructions (GIs):

GI 2.104, *Offshore Oil Spill Reporting Procedure*

GI 2.401, *Inland Oil Spill Response*

GI 6.000, *Incident, Notification, Reporting & Investigation*

GI 6.004, *Near Miss Reporting Process*

GI 155.003, *Form 3208, "Request for Medical Treatment of Injury or Occupational Illness"*

GI 1787.000, *Report of Fire, Emergency or False Alarm*

2.3 General Requirements

2.3.1 SA personnel/supplemental manpower shall immediately report to their supervisors:

A. All on-job injuries and occupational illnesses.

B. All fire, explosion and false alarm incidents.

C. All oil spills/leaks and gas leak incidents.

D. All crane and heavy equipment incidents.

E. All SA motor vehicle accidents (MVAs).

F. All incidents resulting in damage to SA equipment/assets.

G. All near misses, as determined by the SA proponent organization (SAPO).

2.3.2 SA supervisors shall:

A. Investigate the following:

- All on-job injuries and occupational illnesses.
- All fires, explosions and false alarm incidents.
- All oil spills/leaks and gas leak incidents.

Saudi Aramco: Company General Use

- All serious near misses, as determined by the SAPO.
- All crane and heavy equipment incidents.
- All SA MVAs.
- All incidents resulting in damage to SA equipment/assets.

B. Begin the investigation process immediately after the incident and complete it as soon as practicable.

C. Complete and submit all injury data from the incident into SAP EH&S within one working day of the incident.

D. Submit an initial incident report within 24 hours of verbal notification.

E. Submit final incident investigation reports in accordance with GI 6.003.

2.3.3 Contractor personnel shall immediately report to their supervisor:

A. Job-related fatalities.

B. All on-job injuries and occupational illnesses.

C. Damage to property or equipment (e.g., cranes/heavy equipment, scaffold or excavation collapses).

D. All fires and explosions.

E. All oil spills/leaks and gas leaks.

F. All near misses.

2.3.4 The contractor supervisor shall immediately report to the SAPO all contractor and sub-contractor employees' on-job injuries or occupational illnesses, and MVAs utilizing the appropriate forms.

2.3.5 The contractor supervisor shall:

A. Submit to the SAPO all on-job incident reports.

B. Provide assistance to the SAPO's incident investigation team as deemed necessary.

Saudi Aramco: Company General Use

3. Personal Protective Equipment (PPE)

3.1 Purpose

This chapter describes minimum requirements for selection and use of personal protective equipment (PPE).

3.2 References

Saudi Aramco (SA) General Instructions (GIs):

GI 2.721, *Electrical Arc Flash Hazard Mitigation*

GI 8.002, *Safety Spectacles*

GI 8.005, *Protective (Safety) Footwear*

GI 1780.001, *Atmosphere-Supplying Respirators*

SA Engineering Standard (SAES):

SAES-A-105, *Noise Control*

SA Safety Management Guide

Flame Resistant Clothing (FRC)

American National Standards Institute (ANSI)/International Safety Equipment Association (ISEA)

ANSI/ISEA Z87.1, *American National Standard for Occupational and Educational Personal Eye and Face Protection Devices*

ANSI/ISEA Z89.1, *American National Standard for Industrial Head Protection*

American National Standards Institute (ANSI)/American Industrial Hygiene Association (AIHA):

ANSI/AIHA Z88.2, *Practices for Respiratory Protection*

U.S. Code of Federal Regulations (CFR):

29 CFR 1910, Subpart I, *Personal Protective Equipment*

29 CFR 1926, Subpart E, *Personal Protective and Life Saving Equipment*

3.3 General Requirements

3.3.1 When a hazardous situation is recognized, steps shall be taken to eliminate the hazard by use of engineering or administrative controls. If engineering and administrative controls do not adequately eliminate the hazard, PPE shall be used to protect personnel from the hazard.

3.3.2 At a minimum, hard hats, safety glasses and safety shoes shall be worn in SA restricted areas and project work sites. Additional PPE shall be selected and used based upon the results of a documented PPE needs analysis, which shall consider the exposure hazard(s), materials handled and activities performed by personnel. Contractor‟s documented PPE needs analysis shall be made available to the SA proponent organization (SAPO) upon request.

3.3.3 Supervisors shall ensure their personnel are trained in inspection, use, maintenance and storage of PPE according to the manufacturer‟s instructions and this chapter.

3.3.4 PPE shall meet applicable ANSI requirements or equivalent as specified in writing by the SA Loss Prevention.

3.3.5 Proper PPE (e.g., correct for type of exposure, sized to fit the worker, meets applicable standards, no defects) shall be provided to personnel when/where required.

3.3.6 See Chapter IV-2, *Marine Operations*, of this manual, for additional PPE requirements for work on, over or near water.

3.3.7 PPE shall be visually inspected by the user before each use. Defective or damaged PPE shall not be used and shall be immediately replaced.

3.3.8 PPE that has exceeded its useable service life shall be immediately replaced.

3.3.9 Clothing shall be free of holes, excessive wear and other defects. Only proper work clothing (e.g., coveralls, long pants and sleeved shirt) shall be worn by personnel performing construction, maintenance and operations work (e.g., traditional loose flowing “Eastern” style clothing shall not be worn, since it presents tripping and entanglement hazards).

3.4 Head Protection

3.4.1 Personnel shall wear approved hard hats in designated areas, including (1) construction sites, (2) operating plant areas, (3) where there are overhead objects or activities that can result in falling or flying objects or (4) when performing activities that have potential electrical shock or burn hazards to the head.

3.4.2 Hard hats shall meet ANSI Z89.1, Type "1"", Class "E" (electrical) requirements and shall consist of a shell, suspension cradle and, optionally, a chin strap.

3.4.3 Hard hat suspension cradles shall be properly adjusted. There shall be a minimum 3.8 cm (1.5 inches) clearance between the top of the cradle and the inside of the hard hat shell.

3.4.4 Hard hats shall bear identification on the inside of the shell stating the name of the manufacturer, ANSI Z89.1 compliance, date of manufacture and class of the hard hat.

3.4.5 When earmuffs, welder"s shields and/or face shields are required they shall be compatible with the hard hat used.

3.4.6 Hard hats shall not be painted, have holes drilled in them or have large stickers applied to them.

3.4.7 Hard hats shall be destroyed if they have been damaged (e.g., have a hole, gouge, crack or defective suspension cradle), painted or experienced a sharp impact.

3.4.8 Metallic hard hats shall not be used.

3.4.9 Hard hats shall be worn in accordance with the manufacturer"s recommendations.

3.4.10 Hard hats shall be replaced not more than 5 years from the date of manufacture stamped/printed/embossed on the inside of the shell or as otherwise recommended by the manufacturer (e.g., every 3 years). Suspension cradles shall be replaced after no more than 12 months of use.

3.5 Eye and Face Protection

3.5.1 Eye and face protection devices shall meet ANSI Z87.1 requirements.

3.5.2 Approved safety eyewear with side protection shall be worn in designated areas and as needed to protect the worker"s eyes from flying particles, chemicals, etc.

3.5.3 Prescription safety glasses (spectacles) with side shields and shatter-proof lenses, or over glasses that completely cover the worker"s regular prescription glasses, shall be provided to personnel requiring them.

3.5.4 Additional approved hazard-specific eye/face protection (e.g., safety goggles, face shield) shall be worn as needed to protect the worker"s face and neck from flying particles, sprays of hazardous liquids, splashes of molten metal, etc.

3.5.5 Selection, fit and use of eye and face protection devices shall be based on the hazard and the visual needs/limitations of the intended user. See Figure 3.1 for examples of typical eye and face protection devices.

3.5.6 Safety glasses or goggles shall always be worn under a face shield and welding helmet.

3.5.7 Personnel working with or near hazardous liquids shall wear splash-proof goggles with rubber seals that fit flush against the face, including with a face shield if required. See Chapter I-10, *Hazardous Materials*.

3.5.8 Electrical workers shall wear an arc rated face shield or arc flash hood as required by GI 2.721.

3.5.9 Personnel performing welding operations shall wear an approved welder‟s helmet with the proper lens shade. Torch welders, cutters and brazers shall wear special shaded goggles. See Chapter II-10, *Cutting, Welding and Brazing*.

Safety glasses with side shields	Face shield
	
Safety goggles	**Welding helmet**
	

Figure 3.1 Typical Eye and Face Protection Devices

3.6 Hand Protection

3.6.1 Gloves shall be selected and worn based on the materials or equipment being handled. Gloves shall be resistant to hazards specific to the job; such as, but not limited to: hot surfaces, acid/caustic/corrosive chemicals, abrasion, sharp edges, high voltage/electrical and cold surfaces/cryogenics. See Figure 3.2 for examples of typical types of gloves.

3.6.2 Gloves shall be the proper size to fit the wearer‟s hand to ensure proper grip. One size does not fit all.

3.6.3 High-voltage rubber gloves with leather protectors shall be worn by electrical workers as required. See GI 2.721 and Chapter III-3, *Electrical Equipment*, for more information including inspection and maintenance requirements.

3.6.4 Gloves shall not be worn near moving machinery/rotating equipment or when they could present a safety hazard (e.g., where gloves could get caught between moving machinery parts).

Heat resistant	Abrasion resistant (leather)
	
Chemical resistant	**High voltage**
	

Figure 3.2 Typical Glove Types

3.7 Foot Protection

3.7.1 Approved safety footwear shall be worn in field operations, process areas and other designated areas. Foot protection shall comply with GI 8.005 requirements.

3.7.2 Safety footwear shall be selected and used based on the need for oil/abrasion/chemical/impact resistance, heat protection, electrical insulation and comfort.

3.7.3 Safety footwear shall fit properly and shall be worn to cover the entire foot, including the heel.

3.7.4 Safety footwear shall have leather uppers and/or leather composition with steel or nonmetallic composite toecaps. Soles and heels shall be of the nonslip type. However, when working in water or wet areas requiring waterproof footwear, rubber safety boots are allowed.

3.7.5 Personnel working with or near jackhammers, soil compactors and concrete breakers shall wear proper safety shoes, preferably with metatarsal guards.

3.7.6 Nonconductive safety shoes shall be worn by anyone working on electrical equipment. Safety shoes shall not be used when working on electrical equipment if the shoe becomes wet, the rubber sole is worn through or metal particles become embedded in the shoe"s sole or heel.

3.8 Hearing Protection

3.8.1 Ample supplies of approved hearing protection (e.g., earplugs) shall be provided at the job site and shall be worn in high noise areas (i.e., 85 decibels [dBA] or higher).

3.8.2 Plain cotton earplugs shall not be used for hearing protection.

3.8.3 Personnel shall not be exposed to impulse or impact noise levels that exceed the requirements of SAES-A-105. The need for additional hearing protection devices shall be evaluated prior to performing work.

3.8.4 Disposable earplugs shall be discarded at the end of each shift.

3.9 Body Protection

3.9.1 Body protection shall be provided and worn by personnel as needed to protect against hazards such as flash fire, electrical arc flash (see GI 2.721), abrasive blasting, welding, handling asbestos or acidic/corrosive liquids, etc. This protection may include flame resistant clothing (FRC), Tyvek, leather or nonpermeable materials.

3.9.2 FRC shall be provided to and worn by SA and contractor personnel in the specific locations and operating areas where the SAPO has assessed the flash fire hazard and determined that FRC is required.

3.9.3 FRC for protection against flash fire shall be per the SA *Safety Management Guide for Flame Resistant Clothing (FRC)*. The FRC specified in this safety management guide does not provide sufficient protection against electrical arc flash hazards. The proper arc flash FRC/PPE shall be provided to and worn by electrical workers per GI 2.721.

3.10 Fall Protection

PPE used to protect against the risk of falling and related requirements are contained in Chapter II-5, *Fall Protection*, of this manual.

3.11 Respiratory Protection Equipment (RPE)

3.11.1 General RPE Requirements

A. RPE shall be provided and used by personnel exposed to air contaminants exceeding the permissible exposure limit (PEL). See Figure 3.3 for various types of RPE.

B. RPE shall meet ANSI Z88.2 requirements.

C. Self-contained breathing apparatus (SCBA) shall be positive-pressure type. Negative-pressure SCBA shall not be used.

D. Breathing air compressors shall be in accordance with Chapter III-2, *Mechanical and Heavy Equipment*.

E. Breathing air quality shall meet Compressed Gas Association (CGA) Grade „D" requirements (see GI 1780.001) and shall be supplied via an SCBA, air-line cascade system or air-fed hoods with proper particulate/moisture filters and air temperature monitoring.

F. An atmosphere-supplying respirator shall be used when an oxygen-deficient atmosphere could exist or in the presence of toxic hazards where cartridge/filter RPE is inadequate (e.g., H_2S).

G. Personnel shall perform a face seal check to ensure a proper seal prior to every use.

H. RPE shall be inspected by the user before and after each use.

I. RPE maintained for emergency situations shall be inspected at least weekly.

J. RPE shall be cleaned and sanitized after use.

K. RPE shall be stored in a manner to protect from dust, sunlight, heat or damaging chemicals.

3.11.2 Supervisor RPE Responsibilities

Supervisors shall:

A. Identify and evaluate respiratory hazards in the work area.

B. Select the appropriate RPE for the specific hazard(s).

C. Verify RPE meets ANSI Z88.2.

D. Verify that filters, cartridges and/or RPE are correct and rated for use in the intended hazardous atmosphere.

E. Ensure personnel are properly trained on the hazards requiring RPE and the proper use, maintenance and storage of RPE.

F. Fit-test users while they are wearing the RPE to confirm there is a proper face mask seal to prevent leakage.

G. Ensure that other PPE (e.g., safety glasses) does not interfere with the proper fit of the RPE.

H. Ensure/verify the exposure does not exceed the manufacturer"s limits for the selected RPE, filter or breathing air (e.g., could decrease RPE effectiveness by clogging the filter).

I. Conduct periodic RPE inspections and document the findings. Copies shall be submitted to the SAPO upon request.

3.11.3 RPE Training

Employees shall be trained on how to use RPE safely and efficiently. This training shall include:

A. Specific hazards the RPE is designed to protect against.

B. How to wear the RPE, the proper position on the face, where to place the head straps and how to adjust strap tension.

C. The role of exhalation valves and filters.

D. How to properly clean and store RPE.

E. How to identify when RPE is no longer safe to use (e.g., mask is defective, filter/cartridge has exceeded its allowable exposure limits).

F. The warning signs indicating RPE failure.

3.11.4 Proper Usage of RPE

Personnel shall:

A. Not use air-purifying (cartridge type) RPE when potential exposure levels are above the RPE-rated capacity or the immediately dangerous to life or health (IDLH) concentration of the material.

B. Not use air-purifying (cartridge type) RPE in oxygen-deficient atmospheres (i.e., less than 20% oxygen) or for gases and vapors with poor warning properties (e.g., no odor or deadens the sense of smell).

C. Not use incorrect cartridges or filters for the type and concentration of air contaminant.

D. Not use defective equipment.

E. Not use equipment without receiving adequate training.

F. Not wear improperly fitting or modified equipment.

G. Not mix and match RPE parts from different manufacturers.

H. Not use dust masks for protection against hazardous vapors or gases that require respiratory protection.

3.11.5 Air-Line RPE

A. Full-face, positive-pressure type air-line RPE shall be used. Half-face or negative-pressure type air-line RPE shall not be used.

B. Full-face air line RPE shall not be used when air contaminant concentrations are over 1,000 times the PEL. SCBA shall be used when air contaminant concentrations are or could be over 1,000 times the PEL.

C. Five-minute escape packs shall be attached to air-line RPE when exposure levels exceed the IDLH level.

D. Only CGA Grade „D" or greater breathing air shall be supplied to air-line RPE.

E. Breathing air quality shall be checked periodically to ensure air quality is maintained. See Chapter III-2, *Mechanical and Heavy Equipment*. Test results shall be logged/maintained.

F. Air delivered to air-line RPE shall be no hotter than 37.8 °C (100 °F). Use of air-cooling devices (e.g., vortex tubes) may be necessary.

G. Air-line RPE shall not be used when the distance from the source of breathing air is greater than 91 m (300 ft).



Figure 3.3 Types of RPE

4. Work Permit System and Stop Work Authority

4.1 Purpose

This chapter describes minimum requirements of the Saudi Aramco (SA) Work Permit System at maintenance and construction work sites that apply to SA employees and contractors. It also describes the stop work authority program and the associated signage requirements.

4.2 References

SA General Instructions (GIs):

GI 2.100, *Work Permit System*

GI 2.709, *Gas Testing Using Portable Gas Monitors*

SA Safety Management Guides (SMGs)

SMG 06-006, Work Permit Reviews

SA Safety Handbook, *Minimum Safety Rules*

4.3 General Requirements

4.3.1 Work permits shall be used to control hazardous work activities at all SA facilities and locations. For SA operated facilities and for projects after the facility, or portion thereof, has been certified as mechanically complete, the SA work permit system shall be implemented per GI 2.100.

4.3.2 During the construction phase of grassroots projects and before a facility, or portion thereof, is certified as mechanically complete, or for any location which does not meet the criteria as defined in Section 4.3.1, the contractor shall implement an approved work permit system in line with GI 2.100 for all hazardous work, , to ensure safe execution of construction activities. The contractor's work permit system shall be subject to approval by the SA proponent organization (SAPO).

4.4 Work Permit Certification

4.4.1 Work permit issuers and receivers shall have a valid SA issuer or receiver certificate, respectively. They shall attend and pass the work permit issuer or receiver course conducted by SA Training & Development, as well as any required prerequisite training per GI 2.100.

4.4.2 The issuer/receiver's manager or, in the case of a contractor, the SAPO manager who has contractual authority over the contractor, shall sign the issuer/receiver certificate.

Saudi Aramco: Company General Use

4.4.3 Issuers/receivers with signed certificates from one organization shall not issue/receive permits at a different organization/facility, unless the responsible SAPO manager signs a reissued certificate that reflects the current organization, or some other method of agreement between the two organizations is agreed.

4.5 Permit Types

4.5.1 There are four types of SA work permits. As per GI 2.100, they are:

Equipment Opening/Line Break, Form 9873-1 (yellow)

The purpose of the Equipment Opening/Line Break Permit is to ensure that proper planning and precautions are taken during work activities associated with the initial opening of equipment, vessels, or piping that is part of a closed system that contains (or has the potential to contain) flammable, combustible, toxic, or injurious materials (e.g., high-pressure steam).

This permit does not authorize releases; rather it is to ensure that the appropriate precautions are in place to prevent a release.

Hot Work, Form 9873-2 (red)

The purpose of the Hot Work Permit is to control work activities that may produce sufficient energy to ignite flammable atmospheres or combustible materials.

Activities in restricted areas requiring a hot work permit include, but are not limited to:

- Open flames, welding, or torch cutting.
- Use of spark-producing tools or equipment.
- Abrasive blasting.
- Use of internal combustion engines.
- Work on, or in close proximity to, live electrical apparatus.
- Use of a device not rated for the electrical classification of the area.

Cold Work, Form 9873-3 (blue)

The purpose of the Cold Work Permit is to control work activities that will not produce sufficient energy to ignite flammable atmospheres or combustible material but could contribute to injury.

This permit may be used for, but is not limited to, the following work in restricted areas:

- Structural demolition or collapse of nonoperational buildings.
- Removal or disturbance of asbestos-containing material.

Saudi Aramco: Company General Use

- Work activities involving cryogenic materials.
- Scaffold erection or dismantling.
- Painting.
- Excavating by hand.
- Concrete pouring and formwork.
- Use of hand tools that have no electrical power.

Confined Space Entry, Form 9873-4 (green)

The purpose of the Confined Space Entry Permit is to ensure:

- Proper preparation of confined spaces prior to entry.
- Safe entry by personnel, including provisions for rescue.
- Restoration of confined spaces.

Work activities inside a confined space may require a Hot or Cold Work Permit to be issued in combination with the Confined Space Entry Permit. Refer to Chapter I-6, *Confined Spaces,* for further requirements.

4.6 Issuance and Approval of Permits

4.6.1 Issuers and receivers shall have in their possession a valid SA work permit certificate.

4.6.2 Certified permit receivers shall request the proper permit(s) from a SAPO-certified permit issuer (e.g., supervising operator, operations supervisor) prior to executing any job. Permits shall identify the specific work to be performed by the work crew at a specific location.

4.6.3 Issuers shall approve and issue a permit only after they (or their designated representative) have performed the following:

A. Verified that "Section 1 - Work Description" of the work permit form has been completed. Work permits shall clearly specify date and duration of the work, work location, work to be performed, and equipment to be used at the job site.

B. Completed "Section 2 - Hazard Identification and Control" of the work permit form. Work permits shall clearly identify the types of energy, isolation method(s), potential exposures, required protective equipment, fire protection methods, additional safety precautions, and actions to be taken in the event of an emergency. General statements, such as "work safely" or "wear PPE," are inadequate and shall not be written on the permit.

C. Reviewed precautions taken and restrictions imposed to control the hazards associated with the job site and/or work activity (see applicable

Saudi Aramco: Company General Use

work permit sections in this instruction) with the receiver and listed them on the work permit.

D. Attached applicable checklists/forms to the work permit that provide supplemental information and/or approvals for the particular work activity, including but not limited to excavation checklist, confined space entry log and gas test form, blind list/isolation plan, critical lift plan, or hydrotest form. All checklists/forms shall be completed.

E. Conducted a joint site inspection with the receiver using the *Hazard Analysis Checklist*. The individuals who participate in the joint site inspection shall sign the *Hazard Analysis Checklist* on the work permit to verify the checklist was completed. See GI 2.100, Supplement 2.100-3 for information regarding the joint site inspection and completion of the checklist.

4.6.4 The issuer's and receiver's signatures, plus any other required approvals/signatures shall be on the completed permit. Issuers shall obtain countersignatures from applicable units/departments as needed. See GI 2.100 for information regarding additional approvals/signatures and countersignatures.

4.6.5 Additional approvals/signatures shall be required for renewed/extended work permits (see GI 2.100 and Section 4.7 of this chapter), as well as for when certain atmospheric limits are present at the job site (see GI 2.709).

4.7 Issued Permits

4.7.1 Permits are normally issued for a single operating shift.

4.7.2 Permits may be *renewed* for one consecutive operating shift, regardless of the shift duration, but the total permit duration cannot exceed 24 hours. This renewal requires the signatures of both the issuer and receiver coming on shift, and the notification of all countersigning organizations.

4.7.3 Permits (except for equipment opening/line break permits) may be issued for a period greater than two consecutive operating shifts, but not in excess of 30 days. This *extended* duration applies to prolonged construction or maintenance work where the job site hazards and precautions remain unchanged. The permit shall be approved by the manager or above of the issuing and receiving organizations, and the following conditions must be satisfied:

A. It is highly unlikely that conditions at the job site will change or develop in a manner that would create a hazard to personnel, damage to equipment or facilities, disruption in operations, or harm the environment.

B. Precautions are taken, prior to performing the work, to ensure safe conditions throughout the work activities.

Saudi Aramco: Company General Use

C. Both the issuing operation's manager and the receiver organization's manager (and countersignature organizations' managers, if applicable) agree to the job conditions and control measures to be used and sign the permit (see GI 2.100 for additional details).

4.7.4 The custody of open work permits shall be transferred to an alternate issuer in the event that the issuer is required to leave work. This transfer of custody of the work permit shall follow the same process as a *renewed* work permit. However, the notification of all countersigning organizations is not required.

4.7.5 Receivers are to remain on the job site at all times. However, if a receiver must leave the immediate work area, they shall give the permit to another SA-certified permit receiver. This alternate receiver shall be agreed to in advance by the issuer and the alternate receiver's name, certificate number, and badge number shall be recorded on the work permit by the issuer.

4.7.6 Receivers shall keep permit copies, either in their possession or posted in plain view at the job location, at all times, so that they are available for inspection or cancellation if necessary.

4.8 Canceling Permits

4.8.1 Work permit(s) shall be immediately canceled, the work stopped, and new permit(s) issued if a change occurs in the work activities or site conditions that could potentially create an additional hazard to personnel, damage to equipment or facilities, disruption in operations, or harm to the environment.

4.8.1.1 When work is stopped the issuer must obtain the work permit, write on the permit the reason for the work cancelation, the time, and other relevant information.

4.8.1.2 The issuer and receiver shall take action to correct deficiencies to allow the job to resume.

4.8.1.3 When all deficiencies have been corrected, the issuer shall issue a new work permit(s).

4.8.2 The issuer and receiver have the responsibility to stop work any time the job site does not meet the work permit conditions or any applicable SA safety and health requirements. The issuer and/or receiver shall take action to correct the deficiencies before work can resume.

4.8.3 In the event of an emergency, all work permits are canceled within the area affected by the emergency condition and as specified by the Incident Commander.

4.8.4 Emergency work can be authorized without applicable work permits under the direction of the Incident Commander. However, the work activity shall follow all SA safety rules and standards normally applicable for the specific emergency situation. Once the "All Clear" has been declared, the work permit system shall be used for all subsequent work activities.

Saudi Aramco: Company General Use

4.9 Closing Out and Filing the Permit

4.9.1 After completion of the job or when the permit's duration has expired, issuers (or their designated representative) shall ensure a joint site inspection has been conducted with the receiver to verify that the work area has been left in a safe and secure condition before the work permit can be closed.

Note: During activities involving cutting, welding or open flame, the 30 minute fire watch period must be completed prior to closing the permit.

4.9.2 Work permits shall be closed by both the issuer and receiver signing the permit form. When distance and remoteness make signing impractical, an alternative closing method must be determined and stated on the work permit when it is issued.

4.9.3 The original permit shall be maintained on file by the issuing department for a minimum of three months.

4.10 Permit Rules

4.10.1 The issuer and receiver are jointly responsible for the safety of personnel and equipment at the job site. A joint site inspection shall be conducted for *all* work permits. Work shall not begin before the permit has been properly signed.

4.10.2 The correct permit(s) shall be issued for the job: Hot, Cold, Confined Space Entry, and Equipment Opening/Line Break. More than one permit may be required for some jobs (e.g., most confined space entries).

4.10.3 Atmospheric gas testing shall be conducted with SA-approved portable gas monitoring equipment for all types of work permits for work that is performed in "restricted areas" as well as for Confined Space Entry Permits, Equipment Opening/Line Break Permits, and Hot Work Permits outside "restricted areas" where the presence of flammable vapors or gases is suspected. Tests for hydrogen sulfide (H_2S), oxygen concentration, flammable gases, and any applicable toxic substances shall be performed before issuing these permits. Gas tests shall be performed for Cold Work Permits where applicable. See GI 2.100 and GI 2.709.

4.10.4 Hot work is not permitted if the atmosphere is above 0% of the lower explosive limit (LEL).

4.10.5 A breathing apparatus (e.g., self-contained breathing apparatus) shall be used if any of the following atmospheric conditions exist:

- Oxygen (O_2) concentrations are less than 20.0%.
- Flammable mixtures are at or above 5% and less than 10% of the LEL.
- Hydrogen sulfide (H_2S) concentration is at or above 10 parts per million (ppm) and less than 100 ppm.

Saudi Aramco: Company General Use

4.10.6 Job descriptions and equipment to be used shall be clearly stated on the permit(s). Permits shall be issued for specific tasks at specific locations. One permit shall not cover more than one location.

4.10.7 Proper locks and hold tags shall be used where applicable (e.g., multiple clips with locks or chains with locks). See Chapter I-5, *Isolation, Lockout, and Use of Hold Tags*, for further requirements.

4.10.8 Permits shall be issued for the specific period of time required to complete the job.

4.10.9 Prior to the start of work, the work permit receiver shall communicate the hazards and precautions for the job, as well as other requirements on the permit, to all workers working under the permit.

4.10.10 Periodic reviews of the job site, including gas testing, shall be conducted as required.

4.10.11 Oncoming shift issuers and receivers shall inspect the job site, write the renewal time and sign the permits when renewing permits for another shift (per Section 4.7).

4.10.12 Special requirements and precautions, such as fire watches, self-contained breathing apparatus (SCBA), lifelines, and barricades shall be indicated on the permit.

4.10.13 During activities that involve cutting, welding or open flame, a fire watch shall remain in the area for no less than 30 minutes after the hot work is finished.

4.10.14 In the event of an emergency, all active permits in the affected area shall be immediately cancelled and work activities stopped.

4.10.15 Work areas shall be cleared of nonessential personnel to avoid exposing them to unnecessary hazards.

4.10.16 The issuer or receiver shall stop work and cancel the permit if there are changes in the work activities or site conditions that could potentially create an additional hazard to personnel, damage equipment or facilities, disrupt operations, or harm the environment. If a permit is cancelled, a new permit shall be issued after the work site has been made safe (see Section 4.8).

4.10.17 Permits shall be closed out (per Section 4.9) after the work has been completed or the permit expires. The issuer and receiver shall inspect the job site and sign the permit to close it. When distance and remoteness make signing impractical, an alternative closing method shall be determined and stated on the work permit when it is issued.

Saudi Aramco: Company General Use

4.11 Stop Work Authority

4.11.1 All personnel, whether Saudi Aramco employee or contractor, have the authority and obligation to stop any observed unsafe work at all locations covered in Section 4.3.

4.11.2 Contractors at SA grassroots project sites shall implement a stop work authority program in line with these requirements. The contractor's stop work authority program shall be subject to approval by the SA proponent organization (SAPO).

4.11.3 Stop work authority consists of five steps:

4.11.3.1 **Stop Unsafe Work**: Personnel shall stop work if an unsafe behavior or condition is observed.

4.11.3.2 **Notify Affected Personnel and Supervision**: Notify the SA supervisor as well as any additional applicable organizations, such as the Loss Prevention Department, if needed.

4.11.3.3 **Investigate the Cause for Stopping Work and Correct the Hazard**: Proponents shall discuss the situation and come to an agreement on the behavior or condition in question. If it is safe to proceed, the reasons for continuing the work shall be explained to the individual that stopped the work as well as the work crew prior to work resuming. If the concern is valid, work shall remain suspended until it has been verified that proper controls are in place. This may require modification of work practices or procedures.

4.11.3.4 **Communicate Findings and Resume Work**: All affected personnel shall be notified of actions that were taken.

4.11.3.5 **Follow-Up**: Proponents shall promptly evaluate and review all stop work cases to identify any need for additional investigation or follow-up.

4.11.4 Stop work signage, as defined further below, shall be mounted in clearly visible locations at worksites.

4.11.4.1 The signage shall be in Arabic and English and shall contain the following language:

4.11.4.1.1 English text: If it's unsafe, stop work and report it to your supervisor.

4.11.4.1.2 Arabic text:
اذا كان الوضع غير آمن، اوقف العمل وقم بابلاغ مشرفك

Saudi Aramco: Company General Use



Figure 1: Example of Stop Work Authority signage

4.11.4.2 Signage design and color shall comply with SAES-B-067.

4.11.4.3 The number of signs and sign locations shall be determined by the proponent based on facility design, size, and risks, in order to ensure adequate coverage.

4.11.4.4 Contractors shall ensure that signage language is translated into the additional language(s) of their workforce.

Saudi Aramco: Company General Use

5. Isolation, Lockout and Use of Hold Tags

5.1 Purpose

This chapter describes minimum requirements for safely isolating energy sources and managing associated hazards during maintenance, inspection and construction activities, including facility modifications. This is applies to electrical sources of energy as well as other sources of potentially stored energy.

5.2 References

Saudi Aramco (SA) General Instructions (GIs):

GI 2.100, *Work Permit System*

GI 6.012, *Isolation, Lockout and Use of Hold Tags*

SA Safety Handbook, *Minimum Safety Rules*

5.3 General Requirements

5.3.1 Isolation of energy sources shall be per GI 6.012.

5.3.2 During job planning, an isolation plan shall be developed that shall identify all locations to be isolated, types of isolating devices to be used and site/job-specific procedures for isolating the equipment.

5.3.3 The isolation plan shall include a blind list if blinds are to be used. The blind list shall, at a minimum, include the following blind information: blind number, blind rating, date of installation, location, installer name, date of removal and remover name.

5.3.4 The isolation plan shall be reviewed and verified by relevant SA facility management (e.g., the operations shift superintendent for the unit where the isolation will occur) and contractor site management prior to the isolation work being performed. In some cases, additional SA operations shift superintendent(s) shall be required to also concur with the plan (e.g., where the isolation affects adjacent process units or other facilities). The SA facility management shall specifically concur with the blind list where plot/battery limit piping is involved.

5.3.5 All necessary isolation and blinding equipment/devices (locks, tags, properly rated blinds, etc.) shall be made ready and inspected before commencing work.

5.3.6 All forms of isolation (electrical, mechanical or otherwise) shall use the Lock/Hold Tag (SA Form 525) at every isolation point. See Figures 5.1 and 5.2. The following information shall be provided on all tags:

- Plant number/location.

- Equipment name.
- Date and time of lockout.
- Name, badge number, organization, contact phone and signature of the individual who installed the isolation device.
- The reason for the isolation.

5.3.7 Contractors shall establish an isolation, lockout and use of hold tag program for grassroots projects that is compatible with GI 6.012 and this chapter. For existing facilities, contractors are required to implement the SA proponent organization's isolation procedure.



Figure 5.1 SA Form 525, Front



Figure 5.2 SA Form 525, Back

5.4 Electrical Lockout and Tagout (Lock, Tag, Clear, Try)

5.4.1 Isolation shall be considered complete only when no associated control device is capable of energizing the equipment.

5.4.2 In situations where it is not possible to lock out an isolating device, isolation may be accomplished by removal of fuses, disconnection of electrical cables, or physical removal of a component of the system

supplying energy to the equipment. The point of physical interruption shall be identified with a fully completed hold tag.

5.4.3 Each lock on a piece of equipment or on a multiple lockout clip shall be identified with a subsequent hold tag. See Figure 5.3.



Figure 5.3 Multiple Lockout Clip

5.4.4 Each organization issuing locks shall have a system of uniquely identified locks. Acceptable methods include color coding, stamping or engraving locks appropriately.

5.4.5 Each lock shall be keyed separately, with no duplicate key, to ensure removal only by the authorized user.

5.4.6 Operations representatives shall be the first to install their lock(s) and shall be the last to remove them.

5.4.7 Maintenance personnel shall install their lock(s) at each corresponding isolation point. Every individual worker shall have in place their personal lock(s) at all lockout locations.

5.4.8 Work shall not be allowed to commence nor shall any maintenance material/device be placed on the isolated equipment until a verification test has been performed to ensure isolation has been correctly carried out and that no residual energy exists within the equipment. “Clear” the area of all potential hazards associated with an accidental start-up (e.g., tools, materials, personnel at a hazardous location). Then a verification test (or “Try”) shall be witnessed by all affected parties and shall be conducted for each potential energy source for the equipment being isolated.

5.4.9 No padlock/lockout device shall be cut or forcefully removed without the permission of the lock owner’s superintendent or operating shift superintendent and such actions shall be in accordance with GI 6.012.

5.4.10 A “group lockout” procedure shall be implemented during maintenance and construction activities involving large numbers of personnel, such as: turnarounds and inspections (T&Is), facility expansions or compressor

repairs. Personnel shall be afforded individual protection and the following steps shall apply to group lockout:

A. An operations representative shall lock and tag each isolation point with single-keyed locks per the requirements of this document or written departmental isolation procedure/instructions.

B. The maintenance/construction supervisor shall also lock and tag each isolation point.

C. The maintenance/construction supervisor's key(s) to these locks shall be placed in a group lockout box.

D. Multiple lock clips (hasps) shall then be attached on the closed group lockout box, as required.

E. The operations representative shall install their lock and tag on the group lockout box first. They shall maintain possession of their key(s) until the job is complete.

F. Each member of the maintenance/construction crew shall then place their lock and tag on the group lockout box (use a multiple lock clip (hasp) if necessary) and maintain possession of their key(s) until the job is complete.

G. When a craft shift change occurs and work has not been completed, the oncoming shift may either:

Replace the previous shift's locks and tags with their own locks and tags, in which case the off-going shift shall remove their locks and tags.

Transfer keys between shifts. This transfer requires the craft supervisors to conduct a detailed review of installed locks and tags. Hold tags belonging to the original shift crew shall be signed by the oncoming shift personnel, or entirely new tags shall be completed by the oncoming shift and installed to replace the original shift's hold tags.

5.5 Piping and Equipment Isolation and Blinding

5.5.1 Piping or equipment shall be isolated and/or blinded and the contents drained, vented or purged before any work is performed (inspections, repairs, maintenance, modifications, etc.).

5.5.2 Operations or proponent organizations shall ensure that specific isolation, lock and hold tag procedures are in place to protect personnel when such activities are performed.

5.5.3 The levels of isolation are listed in Table 5.1 in the increasing order of protection (first being the lowest and last being the highest) and shall be applied accordingly depending on the nature of work.

5.5.4 If isolating by double block and bleed (DB&B), which involves locking closed two isolation valves in series, and locking open a drain/vent valve between the two isolation valves (see Figure 5.4), a hose or hard piping shall be attached to the drain valve to ensure that any liquid that might pass is carried away from the work site and all locks shall be tagged.

Table 5.1 Levels of Isolation

Method of Isolation	Degree of Protection	Examples of Use
Single block valve	Minimum	Changing a gauge or sock filter, swinging a blind (minimum routine maintenance)
Double block and bleed (DB&B)	Medium	Removing a control valve
Disconnection (removal/dropping of a spool piece)	Maximum	Long-term construction/maintenance work
Blinding	Maximum	Confined space entry/hot work

Notes:

- All means of isolation shall be locked and tagged accordingly.
- When using a single block valve, fluid shall be removed and valve tested for leakage before commencing work.

5.5.5 In order for DB&B to be utilized, the subsequent bleed (vent/drain) valve shall be adequately sized in order to handle the upstream pressure in the event the first isolation valve fails/passes. Vents and drains shall be verified to be clear of obstruction.

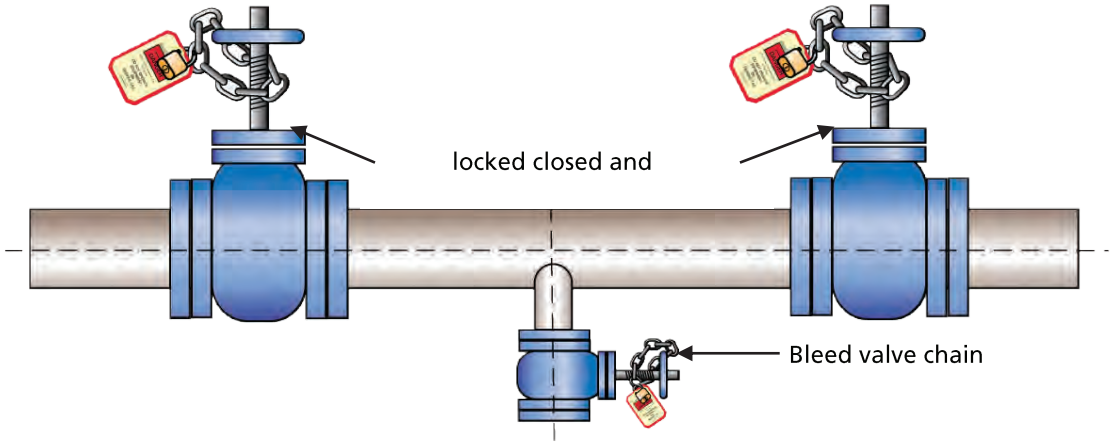

Double Block and Bleed Assembly with Chain Locks and Tags

5.5.6 Single block valve and DB&B isolations shall not be used when equipment or a piping containing hazardous materials is to be opened for confined

space entry or hot work activities. This type of work activity requires isolation by blinding.

5.5.7 Blinding involves inserting a slip blind or blind flange at a flanged joint or a swinging (rolling) a spectacle blind if provided by design. See Figures 5.5, 5.6 and 5.7.



Figure 5.5 Slip Blind



Figure 5.6 Blind Flange

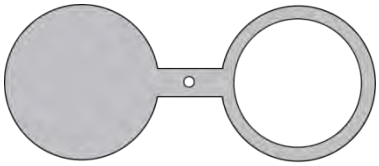

Figure 5.7 Spectacle Blind

5.5.8 The rating, size and location of all blinds shall be verified prior to installation and shall be reflected on the blind list. Each blind shall be stamped with the corresponding pressure rating and installed with matching gaskets.

5.5.9 Blind gaskets shall be inspected for damage prior to installing/swinging blinds.

5.5.10 Written procedures shall be developed and implemented for major equipment with multiple connections and several low points where hazardous materials might remain trapped.

5.5.11 These written procedures shall include, but not be limited to:

- Drawings (P&IDs, isometric drawings, etc.) indicating all isolation points, drains and vents.
- The blind list, to track installation (and later removal) of all blinds.
- The steps or sequence for depressurization, draining and purging of equipment and associated piping before blinds are inserted.
- Site preparation steps (e.g., covering sewers).
- Proper sequence for installing blinds.
- Safe venting and disposal of any drained material.

5.5.12 Associated equipment and piping shall be isolated by closing block valves, depressurization, draining and purging (for flammable/toxic service piping). Valves shall be chain-lock closed and tagged before opening the flange and shall remain so while any blinds are in place. Valve locks and tags can be removed when the subsequent blinds are removed and the flanged connection restored to its original condition.

5.5.13 Piping sections with valves on each end, drains at low points and vents at high points shall be isolated, depressurized and drained prior to work. Piping that has no drains or vents shall not be opened.

5.5.14 A Release Permit shall be issued before commencing any blinding activity. Blind swinging/insertion shall be covered by a Hot or Cold Work Permit as well, depending on the circumstances (using impact wrench with generator vs. using hand tools).

5.5.15 Blinding shall be performed by loosening the bolts and cracking the flanged connection at the "5 o'clock position" (down and away from the person performing the work) to allow any potential gases or liquids to be released away from personnel.

5.5.16 When equipment (e.g., pump, meter or filter) is removed from service for long-term maintenance or construction activities, subsequent blinds shall be required for associated piping.

5.5.17 Blinds shall be inserted only at the isolated side (i.e., downstream) of each isolation valve that has been locked closed and tagged.

5.5.18 Blinds shall be accessible and scaffolding shall be provided where necessary.

5.5.19 The first blind inserted shall be the last to be removed.

5.5.20 All bolt holes of the blind and corresponding flange connection shall be used when installing blinds.

5.5.21 All slip blinds shall have tails as shown in Figure 5.5.

5.5.22 Safety precautions shall be taken (e.g., use of self-contained breathing apparatus) for removing blinds since hazardous materials might have accumulated between the blind and the corresponding isolated valve if the valve was passing.

5.6 Power Operations Department Clearances

5.6.1 The SA Power Operations Department (POD) shall issue clearances as required before work is performed on or near high-voltage electrical equipment (e.g., that has been de-energized and isolated from the power system in an approved manner). See Chapter III-3, *Electrical Equipment*, of this manual.

5.6.2 Clearances shall be issued by POD dispatchers in addition to any work permits that are required. See Chapter I-4, *Work Permit System*.

5.6.3 The proponent organization and contractors shall contact POD directly to coordinate with the POD electric system operators for assistance.

6. Confined Spaces

6.1 Purpose

This chapter describes minimum site safety requirements for personnel performing work inside confined spaces.

6.2 References

Saudi Aramco (SA) General Instructions (GIs):

GI 2.100, *Work Permit System*

GI 2.709, *Gas Testing With Portable Gas Monitors*

GI 6.008, *Restriction of Portable Electrical/Electronic Devices*

GI 6.012, *Isolation, Lockout and Use of Hold Tags*

GI 430.001, *Waste Management*

GI 1780.001, *Atmosphere Supplying Respirators*

SA Engineering Standards (SAESs)

SAES-B-068, *Electrical Area Classification*

SAES-P-123, *Lighting*

SA Safety Handbook, *Minimum Safety Rules*

6.3 General Requirements

6.3.1 Confined space entry within SA facilities, SA project sites, and at project support facilities covered under SA Land Use Permits, including laydown yards shall be in accordance with this chapter and local instructions.

6.3.2 A confined space entry permit shall be issued in accordance with GI 2.100 prior to entry into confined spaces. Other permits may be required (e.g., hot work permit or cold work permit), depending on the type of work to be conducted within the confined space.

6.3.3 For confined space entry performed only by personnel from a SA proponent department/organization (e.g., plant operations), the confined space entry permit shall be issued to a SA-certified work permit receiver from the proponent department/organization.

6.3.4 During the construction phase of grassroots construction projects and before a facility, or portion thereof, is certified as mechanically complete,

the contractor shall implement equivalent confined space entry permit procedures to ensure safe execution of construction activities. The contractor's confined space entry permit procedures shall be subject to approval by the SA proponent organization (SAPO).

6.3.5 Every job that requires a confined space entry shall have a designated confined space entry supervisor (CSES). See Section 6.4.1 for CSES responsibilities.

6.3.6 A confined space entry plan shall be developed by the SAPO or the contractor (e.g., for a grassroots construction project) prior to entry into a confined space (see Section 6.5 for confined space entry plan requirements).

6.3.7 A standby man shall be assigned by the CSES at each designated entry point and shall continuously monitor the confined space entry while personnel are inside the confined space. In certain situations (e.g., multiple entry/exit points) more than one confined space standby man is required. See Section 6.4.2 for standby man responsibilities.

6.3.8 Standby men shall be provided with adequate means of communication (e.g., two-way radio) to ensure continuous communication with entrants and with the proper personnel (e.g., CSES, rescue team) in event of an emergency.

6.3.9 At least one fire extinguisher (30 lb) shall be provided near each designated confined space entry point if the space is within process equipment (e.g., vessel, column, tank) or where combustible or flammable material may be present (including residue). Carbon dioxide (CO_2) type fire extinguishers shall not be used inside enclosed confined spaces.

6.3.10 A confined space entry checklist (such as the sample checklist at the end of this chapter) may be used by the CSES, etc., to help ensure safety requirements are met.

6.3.11 Confined space standby men and entrants shall be physically fit.

6.3.12 Each designated confined space entry point shall be evaluated to ensure entrants can safely enter and exit the confined space. Designated entry points shall not be blocked or obstructed with equipment while entrants are inside the space (e.g., air cooling/ventilation hoses blocking an entry point).

6.3.13 The completed work permit(s) (e.g., confined space entry, hot work), confined space warning signs and barricades shall be posted outside the confined space to notify personnel that a confined space entry is in progress and to prohibit entry by unauthorized personnel.

6.3.14 Confined space warning signs shall comply with SAES-B-067 and read in Arabic and English as follows:

Arabic text:	English text:
منطقة محصورة خطرة الدخول من غير مرخص له ممنوع	Danger Confined Space No Unauthorized Entry

6.3.15 When the potential exists for persons or objects to fall into a confined space, additional warning signs and/or barricades shall be provided.

6.3.16 Prior to entry, chemical, and physical hazards shall be eliminated or controlled by one or more of the following methods: equipment isolation (e.g., lockout/tagout), draining, water washing, steam cleaning, purging, etc. See Sections 6.6, 6.8, and 6.9 for further information.

6.3.17 Mechanical ventilation (e.g., air movers) shall be used to ensure removal of all hazardous airborne contaminants in confined spaces where a hazardous atmosphere exists or could develop during the course of planned work. See Section 6.8 for further information regarding ventilation.

6.3.18 Atmospheric gas testing shall be in accordance with GI 2.709 and Section 6.7.

6.3.19 The proper personal protective equipment (PPE) shall be provided to personnel entering a confined space and to each standby man. PPE shall be continuously used during the confined space entry. See Chapter I-3, *Personal Protective Equipment (PPE)*.

6.3.20 Only properly trained and authorized personnel shall enter a confined space. Verification of training shall be made available upon request by the SAPO.

6.3.21 Personnel entering/exiting a confined space shall sign a log in/out sheet. See the sample log sheet at the end of this chapter.

6.3.22 Ignition sources shall be eliminated or controlled within a confined space. If ignition sources are present (e.g., sparks or open flames), a hot work permit shall be issued and periodic gas tests, or continual gas monitoring, as applicable, shall be performed (see section 6.7 for gas testing requirements).

6.3.23 Electrical equipment, including lighting, used in an electrically classified area (see SAES-B-068) shall be Underwriters' Laboratories (UL) listed, Factory Mutual (FM) approved or equivalent. Electrical equipment (including radios) shall be in accordance with the electrical classification of the confined space and as per the requirements of GI 6.008 and SAES-B-068.

6.3.24 Residual current devices (RCDs), including ground fault circuit interrupters (GFCIs) and earth leak current breakers (ELCBs), shall be

utilized on all electrical-powered equipment (including portable lighting) used inside a confined space regardless of the electrical classification of the space.

6.3.25 Lighting shall be provided as needed to safely enter, exit, and work inside a confined space. Lighting shall be on a separate electrical circuit from other electrical equipment and tools used in the confined space.

6.3.26 If the confined space is within process equipment (e.g., vessel, column, tank) or where combustible or flammable material may be present (including residue), portable lighting shall be rated for an electrical classification not less than Class I, Zone 2, and shall not be used in the confined space without a hot work permit per GI 2.100, except explosion-proof flashlights. See Chapter, I-11, *Hand Tools and Power Tools*, for further information on portable lighting.

6.3.27 When electrical power cords are used inside a confined space, protection shall be provided near sharp edges and through entry points to prevent damage to the power cords.

6.3.28 Compressed gas cylinders shall not be placed in a confined space.

6.3.29 Internal combustion engines shall not be positioned inside a confined space or at a location that could allow exhaust to enter the space. This type of equipment shall be positioned downwind from confined space entry/exit points and air mover intakes.

6.3.30 To facilitate nonentry rescue, retrieval systems or methods shall be used whenever an entrant enters an enclosed confined space that requires vertical entry (e.g., inside a vessel, column, tank, valve box, sump pit, lift station), unless the retrieval equipment would increase the overall risk of entry or would not contribute to the rescue of the entrant.

Note: Confined space entries requiring nonentry rescue shall not be performed after January 1, 2018, unless the requirements of Sections 6.3.30 to 6.3.32 are complied with.

6.3.31 A retrieval system is the equipment (including a retrieval line, full-body harness, and a lifting device) used for nonentry rescue of persons from vertical confined spaces (See Figure 6.1). Retrieval systems shall meet the following requirements:

- Each entrant shall wear a full-body harness, with a retrieval line attached at the center of the entrants back near shoulder level or above the entrant's head.

- The other end of the retrieval line shall be attached to a mechanical device (e.g., winch attached to a tripod) so that rescue can begin as soon as the confined space standby man becomes aware that rescue is necessary.

6.3.32 The retrieval system shall be tested at the beginning of the entry into the vertical confined space to ensure that the system is properly setup and functioning. If the system does not work all entry activities must stop and all entrants must exit the space until the retrieval system is operational.



Figure 6.1 Example of a retrieval system used for nonentry rescues from vertical confined spaces.

6.3.33 Fall protection (e.g., full-body harness/lanyard, scaffolding) shall be used if personnel could fall more than 1.8 m (6 ft) when working inside the confined space. See Chapters II-2, *Scaffolding*, and II-5, *Fall Protection*.

6.3.34 Entrants to a process-related confined space or where movement is inhibited or difficult (e.g., inside a vessel, column, tank) shall be given breaks as needed and allowed to rest outside in an open area. The CSES shall arrange these breaks accordingly. See Chapter I-13, *Heat Stress*.

6.3.35 Flammable/combustible materials shall not be stored inside a confined space.

6.3.36 Entry into a confined space where naturally occurring radioactive material (NORM) contamination is known or suspected shall be subject to the following controls:

- An enclosed confined space (e.g., vessel, column, tank) shall be mechanically ventilated for a minimum of four hours prior to entry.

- Personnel and equipment exiting the confined space shall be subject to a NORM contamination survey.
- Personnel or equipment found to be contaminated with NORM shall be segregated and decontaminated. See Chapter I-10, *Hazardous Materials*.

6.3.37 Where hydroblasting operations are occurring inside a confined space, low point drains shall remain open (car sealed) to eliminate water accumulation.

6.3.38 Rescue equipment and a rescue team shall be available in the event of an emergency requiring evacuation of the confined space.

6.3.39 In the event of a confined space rescue, the confined space atmosphere shall be considered immediately dangerous to life or health (IDLH) and positive-pressure self-contained breathing apparatus (SCBA) or full-face, positive-pressure type air-line respiratory protection equipment with an emergency escape cylinder shall be used by all personnel entering the confined space. See Chapter I-3, *Personal Protective Equipment (PPE)*.

6.3.40 If the confined space entry activity is suspended, the entry point(s) shall be barricaded and a "NO ENTRY" sign shall be posted.

6.3.41 When work is complete and the confined space is ready to be returned to normal service, the confined space shall be inspected to ensure all equipment and tools have been removed, etc.

6.4 Responsibilities

6.4.1 CSESs (e.g., Supervising Operator, Work Permit Issuer) shall:

A. Review the confined space entry plan that is unique to the specific confined space.

B. Communicate the confined space entry plan (e.g., specific confined space hazards, precautions, responsibilities, emergency procedures) to entrants and standby men.

C. Ensure proper work permits (confined space entry, hot work, etc.) are issued prior to allowing work to commence.

D. Verify all precautions of the confined space entry plan and applicable work permits are properly implemented.

E. Designate qualified standby men who are fluent in the language needed to communicate with the CSES or rescue team.

F. Verify entrants and standby men are properly trained.

G. Coordinate confined space operations when employees of more than one maintenance crew or contractor will be working simultaneously inside or adjacent to the confined space.

H. Provide sufficient manpower and equipment for safe confined space entry and work inside the space.

I. Verify the confined space is properly isolated per GI 6.012, purged, and the atmosphere is safe to enter as part of the confined space entry permit issuance process.

J. Ensure the atmosphere within the confined space is monitored as indicated on the confined space entry permit and/or the confined space entry plan.

K. Ensure confined space entry and gas test logs are properly completed.

L. Ensure the proper PPE is provided to personnel entering the confined space and to each standby man.

M. Ensure adequate means of communication (e.g., two-way radio) and a fire extinguisher (non-CO_2 type) are available for each standby man.

N. Verify rescue equipment and a rescue team are readily available in the event of an emergency requiring evacuation of the confined space.

O. Ensure the confined space entrance is barricaded/blocked and a "NO ENTRY" sign posted if the confined space entry is suspended.

P. Terminate confined space entry and cancel work permit(s) as necessary (e.g., unsafe conditions develop).

6.4.2 Confined space standby men shall:

A. Review the confined space entry plan and applicable work permits to understand the confined space hazards, precautions, responsibilities and emergency procedures.

B. Understand the effects of exposure to potential hazardous substance(s) in the confined space.

C. Maintain a confined space entry log and maintain a continuous count of entrants.

D. Prevent unauthorized personnel from entering the confined space.

E. Monitor activities inside and outside the confined space to determine if it is safe for entrants to enter and/or remain inside the space.

F. Maintain two-way communication with entrants to monitor entrant status (e.g., behavioral effects of hazard exposure) and alert entrants of a need to evacuate the confined space.

G. Have communications equipment readily available on-site and immediately notify proper personnel (e.g., CSES, rescue team) in event of an emergency.

H. Remain at the confined space entry point until relieved by another designated standby man or until all entrants have exited the confined space.

I. Never attempt to enter the confined space, even in an emergency, until relieved.

J. Perform nonentry rescues as specified by the rescue plan.

K. Perform no other duties that could interfere with the primary responsibilities of a confined space standby man.

L. Order entrants to evacuate the confined space under any of the following conditions:

- An unsafe condition develops inside or outside the confined space.
- An entrant displays abnormal behavioral effects of hazard exposure.
- If the standby man must leave the area and no relief confined space standby man is provided.

6.4.3 Entrants into a confined space shall:

A. Review the confined space entry permit and confined space entry plan and verify that all precautions have been properly implemented.

B. Understand the effects of exposure to potential hazardous substance(s) in the confined space.

C. Understand the proper use of PPE that is to be used inside the confined space.

D. Not enter a confined space until they are satisfied that all necessary precautions have been properly taken to ensure their safety, including isolation procedures (see GI 6.012 and Chapter I-5, *Isolation, Lockout, and Use of Hold Tags*), and they clearly understand their work assignment within the space.

E. Communicate with the confined space standby man to enable the standby man to monitor the entrants' status (e.g., behavioral effects of hazard exposure).

F. Promptly alert the confined space standby man and other entrants, and/or exit from the confined space as quickly as possible, whenever:

- An order to evacuate is given by the confined space standby man or the CSES.

- The entrant recognizes any warning signs or symptoms of exposure to a hazardous condition or substance.
- An emergency alarm is activated.

6.5 Confined Space Entry Plans

6.5.1 The confined space entry plan shall include, but not be limited to, the following:

A. Scope of work.

B. Results of hazard evaluation (e.g., potential hazards in the confined space and the adjacent area).

C. Location and method for each isolation point of the confined space, including a drawing (e.g., P&ID) and blinding list to assist in verifying isolation of all energy sources.

D. Procedures for cleaning, flushing, purging and/or ventilating the confined space to eliminate or control atmospheric hazards.

E. Access and egress requirements.

F. Pedestrian, vehicle or other barriers as necessary.

G. Fall protection plans whenever an entrant could fall more than 1.8 m (6 ft).

H. Types and frequency of atmospheric gas testing.

I. Types of PPE required (e.g., flame-resistant clothing [FRC], hard hat, safety glasses/goggles, safety shoes, respiratory protective equipment, appropriate gloves, protective coveralls based on potential skin absorption of hazardous materials).

J. Work permit requirements for controlling hazards inside the confined space.

K. Types of equipment required for confined space entry (e.g., scaffolding, air movers, rescue equipment, communication equipment, fire extinguishers).

L. Emergency response/rescue procedures.

6.5.2 The confined space entry plan shall address potential hazards that could develop when employees of more than one maintenance crew or contractor are working simultaneously as authorized entrants in the confined space.

6.5.3 The confined space entry plan shall be made available for review by personnel involved in the confined space entry.

6.6 Isolation and Lockout/Tagout of Confined Spaces

6.6.1 Before personnel are permitted to enter a confined space, all equipment and sources of kinetic and potential stored energy shall be physically de-energized, immobilized, disabled, relieved, disconnected, and/or restrained in accordance with GI 6.012 and Chapter I-5, *Isolation, Lockout, and Use of Hold Tags*. Potential sources of energy include, but are not limited to, electrical, mechanical, hydraulic, chemical, and pneumatic systems.

6.6.2 Blinding or disconnecting of piping shall be the only acceptable method of isolation for confined space entry. Single closed valve or double block and bleed are not acceptable methods of isolation for confined space entry.

6.6.3 Precautions shall be taken to ensure that air contaminants from vehicle exhausts, adjacent processing, or chemical handling cannot enter the confined space.

6.7 Atmospheric Gas Testing

6.7.1 Atmospheric gas testing within confined spaces shall include, but not be limited to, testing for oxygen (O_2), flammable mixtures (Lower Explosive Limit [LEL]) toxic gases (e.g., H_2S), and carbon monoxide (CO).

6.7.2 Atmospheric gas tests shall be performed and immediately recorded:

- Prior to entry.
- After breaks or other interruptions in the work.
- If there is any reason to believe that conditions inside the confined space have changed.
- At periodic intervals (e.g., every 2 hours) as necessary to determine whether acceptable atmospheric conditions are being maintained during the course of the confined space entry.

6.7.3 Atmospheric gas tests shall only be conducted by a SA-certified gas tester per GI 2.709, except for grassroots construction projects which shall be per Chapter I-4, *Work Permit System*.

6.7.4 Initial gas testing prior to entry shall be performed with all mechanical ventilation shut down at least 15 minutes prior to testing.

6.7.5 Initial entry shall be prohibited if gas testing indicates an oxygen deficiency or the presence of unacceptable levels of flammable (LEL) or toxic materials, etc., within the confined space. Only after purging with mechanical ventilation and/or cleanup has rendered the space free of hazardous concentrations (as verified by continuous gas testing inside the confined space) shall initial entry be allowed.

6.7.6 Additional gas testing (e.g., after breaks) shall be conducted with the ventilation system turned on to ensure that contaminants are being removed and that the ventilation system is not a source of contamination.

6.7.7 Continuous gas testing (e.g., by use of personal gas monitors) shall be used if the atmosphere inside the confined space is subject to change or if confined space entry activities involve combustion (e.g., welding or torch cutting).

6.7.8 Whenever a hazardous atmosphere is detected, the confined space shall be evacuated of all personnel until corrective actions have been taken and it has been verified by the CSES that the confined space is safe for reentry.

6.7.9 Hot work shall not be permitted if the atmosphere is above 0% of the LEL.

6.7.10 The following conditions are required prior to entry into or work inside a confined space:

A. No atmosphere-supplying respirator is required if:

- Oxygen (O_2) concentration is at or above 20.0% and less than or equal to 23.5%.
- Flammable/combustible mixtures are less than 5% of the LEL.
- Carbon monoxide (CO) is less than 35 parts per million (ppm).
- Hydrogen sulfide (H_2S) is less than 10 ppm.
- Other potential toxic gas concentrations are below their threshold limit value (TLV).

B. An atmosphere-supplying respirator shall be continuously worn if:

- O_2 concentration is less than 20.0%.
- Flammable/combustible mixtures are at or above 5% and less than 10% of the LEL.
- CO concentration is at or above 35 ppm and less than 1,000 ppm.
- H_2S concentration is at or above 10 ppm and less than 100 ppm.
- Other potential toxic gas concentrations are above their designated TLV and at or below their IDLH level.

C. Confined space entry is not permitted at concentrations above 23.5% O_2, at or above 10% LEL, above 1,000 ppm CO, above 100 ppm H_2S, or above the IDLH of any other potential toxic gas.

D. These requirements are summarized in Table 6.1.

Table 6.1 Confined Space Entry Requirements

Confined Space Entry	Oxygen (O_2)	Flammable/ combustible Mixtures	Carbon Monoxide (CO)	Hydrogen Sulfide (H_2S)
Permitted without an atmosphere-supplying respirator	At or above 20% and less than or equal to 23.5%	Less than 5% of LEL	Less than 35 ppm	Less than 10 ppm
Permitted only while continuously wearing an atmosphere-supplying respirator	Less than 20%	At or above 5% and less than 10% of LEL	At or above 35 ppm and less than 1,000 ppm	At or above 10 ppm and less than 100 ppm
No entry permitted	Above 23.5%	At or above 10% of LEL	At or above 1,000 ppm	At or above 100 ppm

6.8 Ventilation

6.8.1 Mechanical ventilation (e.g., air movers) shall be used to ensure the removal of all hazardous airborne contaminants in confined spaces where a hazardous atmosphere exists or could develop during the course of planned work (painting, welding, etc.).

6.8.2 If the confined space is within process equipment or where combustible or flammable material may be present, mechanical ventilation shall be used during the entire period of occupancy, even if gas testing indicates no hazardous concentrations inside the space.

6.8.3 Flammable/toxic gases or vapors vented from a confined space shall be removed in such a manner that the venting does not pose a risk to employees, equipment, or operations. Precautions shall be taken to eliminate potential sources of ignition in areas where flammable gases or vapors are vented.

6.8.4 Where practical, mechanical ventilation shall provide air blowing into the bottom or lower portion of the confined space and exhaust out the top or upper portion of the space.

6.8.5 Blowers or other means of introducing air into a confined space shall be placed so as to minimize the possibility of introducing air contaminants (e.g., CO).

6.8.6 All electrical and static-producing equipment, including air movers, shall be properly grounded and bonded to the vessel/tank (if applicable).

6.8.7 Mechanical ventilation rates for confined space operations involving application of coating materials, including during the paint curing/drying process, shall meet the minimum requirements of Table 6.2.

Table 6.2 Ventilation Requirements for Confined Spaces

Volume of Confined Space		Required Air Mover Capacity	
m^3	bbl	L/s	cfm
16	100	472	1,000
80	500	1,180	2,500
160	1,000	2,360	5,000
800	5,000	4,720	10,000
1,600	10,000	7,080	15,000
4,000 +	**25,000 +**	**9,440**	**20,000**

6.8.8 Mechanical ventilation/cooling shall be directed at the immediate areas where persons are working within the confined space and shall continue until all person(s) have left the space.

6.8.9 For some jobs, such as welding, grit blasting, spray painting, etc., additional ventilation may be necessary to sufficiently reduce the accumulation of hazardous vapor, mist or particulates. Local exhaust ventilation may also be required for such jobs when the internal configuration of the confined space impedes air circulation.

6.8.10 Plant air or engine-driven compressed air shall never be used for mechanical ventilation.

6.8.11 In lieu of mechanical ventilation, natural ventilation may be used as the source of ventilation in a confined space only if there is no potential for the development of a hazardous atmosphere. Examples of such locations include entries into open excavations or structures, diked areas surrounding tanks, etc.

6.9 Cleaning

6.9.1 Confined spaces shall be cleaned and decontaminated of hazardous materials. Cleaning and decontamination shall be performed to the maximum extent feasible before entry by personnel.

6.9.2 Piping between the confined space and point(s) of isolation shall be drained, cleaned, or flushed of hazardous material and hazardous contaminants.

6.9.3 Additional precautions (e.g., more frequent gas testing) shall be taken when cleaning insulated, double-walled, jacketed, or lined piping and equipment in confined spaces to avoid contamination from trapped materials. Additional precautions shall be taken when cleaning vessels with chemicals, because they may contain hazardous materials.

6.9.4 The method of cleaning, type of equipment used, and safe work procedures shall be selected based on the specific hazards of the confined space.

6.9.5 Prior to entering a confined space that contains unknown residual materials, samples of the materials shall be properly analyzed (e.g., lab analysis) to determine their hazardous characteristics. Whenever possible, samples shall be taken without entering the confined space. See Chapter I-10, *Hazardous Materials*. (Note: Many hazards associated with confined spaces can be attributed to the presence of byproduct sludges, scales, fluids, gases, and other residues.)

6.9.6 Hazardous materials, such as pyrophoric waste, shall be disposed of in accordance with GI 430.001. See Chapter I-10, *Hazardous Materials*.

6.9.7 Entrants and equipment shall be decontaminated and cleaned as necessary during and after the confined space activity.

6.10 Training

6.10.1 Confined space entry supervisors, standby men, entrants, etc., shall receive confined space entry training that is appropriate to their specific responsibilities. Refresher training shall be provided periodically.

6.10.2 Confined space entry training and refresher training shall include, but not be limited to, the following topics:

A. The requirements of GI 2.100 and this chapter.

B. The proponent's or contractor's confined space entry program.

C. Hazards associated with confined space entry.

D. Specific responsibilities of entrants, standby men, entry supervisors, rescue personnel, etc. See Section 6.4.

E. Confined space entry permit requirements.

F. Isolation of energy sources per GI 6.012.

G. SAPO or contractor emergency response plans and pre-incident action plans.

H. PPE requirements.

I. Full-face, positive-pressure type air supplied respiratory protection equipment, including SCBA training, per GI 1780.001.

J. Proper mechanical ventilation techniques and atmospheric gas testing per GI 2.709.

6.10.3 Training for confined space standby men shall also include the following at a minimum:

A. Hazards that may be encountered by entrants and the signs and symptoms of overexposure to potential contaminants inside the confined space.

B. Procedures for summoning rescue or other emergency services.

C. Proper use of equipment used for communicating with entrants and emergency response personnel.

6.10.4 Training for emergency response and confined space rescue personnel shall include the following at a minimum:

A. The SAPO's and/or contractor's pre-incident action plan for each type of confined space they are anticipated to encounter.

B. Emergency response training, including specific training for confined space rescue.

C. Use of emergency rescue equipment and medical equipment expected to be used during a confined space rescue.

D. First aid and basic life support, including cardiopulmonary resuscitation and automated external defibrillator.

Confined Space Entry Checklist

Vessel/Equipment/Confined Space ID:	Entry Date:

#	Requirement	Yes	N/A
1.	Confined space entry procedures/instructions provided and available		
2.	Area barricaded and has warning signs posted		
3.	Electrical sources isolated		
4.	Process piping/equipment isolated		
5.	Hydraulic/pneumatic and other energy sources isolated		
6.	Lockout and hold tag procedures followed		
7.	Hot/cold work permit completed		
8.	Confined space entry permit completed		
9.	Atmosphere tested for % oxygen (O_2)		
10.	Atmosphere tested for % LEL		
11.	Atmosphere tested for hydrogen sulfide (H_2S)		
12.	Atmosphere tested for carbon monoxide (CO)		
13.	Atmosphere tested for other gases (e.g., CO), identify:		
14.	Gases/chemicals purged, flushed, vented		
15.	Continuous gas testing performed		
16.	Mechanical ventilation provided		
17.	Appropriate personal protective equipment (PPE) provided and used		
18.	Appropriate respirator(s) (e.g., SCBAs) provided and used		
19.	Full-body harness provided and used by each entrant		
20.	Appropriate lighting equipment provided		
21.	Rescue service notified of confined space entry operations		
22.	Rescue equipment (e.g., hoist) available		
23.	Fire extinguisher(s) available at designated entry points		
24.	Standby man continuously present during confined space entry		
25.	Standby man has necessary PPE		
26.	Communications equipment for standby man and entrants provided		
27.	Entry log sheet available at designated entry points and used		

Issuer Name, Signature, Badge #	Receiver Name, Signature, Badge #	Time/Date:

Note: This checklist does not replace the mandatory *Hazard Analysis Checklist* that is part of the confined space entry permit issuance process, as required by GI 2.100, *Work Permit System*. This checklist may be used to verify that all required aspects of the confined space entry plan have been implemented prior to beginning the work. If used, the completed checklist shall remain with the Confined Space Standby Man on site after the joint site inspection is complete.

CONFINED SPACE ENTRY LOG

UNIT: _____ WORK PERMIT NO.: _____

LOCATION: _____ PAGE: _____ OF _____

STAND-BY MAN: _____ BADGE NO.: _____

NAME OF PERSONNEL ENTERING THE CONFINED SPACE	BADGE #	SIGNATURE	DATE	TIME-IN	TIME-OUT	JOB ASSIGNMENT

7. Fire Prevention

7.1 Purpose

This chapter describes minimum requirements to prevent and protect against fires at work sites, including construction and maintenance work sites. Design of fixed fire protection systems is not covered by this chapter.

7.2 References

Saudi Aramco (SA) General Instructions (GIs):

GI 2.100, *Work Permit System*

GI 6.001, *Notification Requirements for Incidents (Including Fires)*

GI 6.008, *Restriction of Portable Electrical/Electronic Devices*

GI 1781.001, *Inspection, Testing and Maintenance of Fire Protection Equipment*

SA Engineering Standards (SAESs):

SAES-B-017, *Fire Water System Design*

SAES-B-019, *Portable, Mobile and Special Fixed Firefighting Equipment*

SAES-B-067, *Safety Identification and Safety Colors*

SAES-B-068, *Electrical Area Classification*

National Fire Protection Association (NFPA):

NFPA 1, *Fire Code*

NFPA 10, *Portable Fire Extinguishers*

NFPA 30, *Flammable and Combustible Liquids Code*

NFPA 58, *Liquefied Petroleum Gas Code*

NFPA 70, *National Electrical Code*

NFPA 70E, *Electrical Safety in the Workplace*

NFPA 495, *Explosive Materials Code*

7.3 Layout

7.3.1 The following principles of project site layout and organization shall be used to minimize fire risks:

A. Congestion around machinery and equipment shall be avoided, especially where there is a high level of activity and traffic.

B. Operations having a high fire risk, such as welding and open-flame activities, shall be isolated or specially protected from flammable and explosive materials.

C. Adequate emergency access roads shall be provided. Fire department access roads shall not be less than 6 m (20 ft) in width with an unobstructed overhead clearance of not less than 5.5 m (18 ft). Emergency access roads shall not be obstructed at any time.

D. More than one access road shall be provided when emergency access by a single road could be impaired by vehicle congestion, condition of terrain, climatic conditions or other factors.

E. Storage of flammable and combustible materials shall be restricted to the minimum quantities necessary for an uninterrupted cycle of operations or construction activities. A larger, secondary storage site outside the plant/project area shall be used where possible. Storage and handling of flammable and combustible materials shall meet NFPA 30. See Sections 7.7 and 7.8.

F. Work sites shall be provided with the numbers and types of fire extinguishers suitable for the hazards, and as needed to meet the requirements of NFPA 10 and SAES-B-019. Fire extinguishers and other firefighting equipment locations shall be clearly marked on site layout plans. See Section 7.9.

G. A fire prevention inspection checklist shall be used to evaluate construction site and storage yards/areas. See the sample checklist at the end of this chapter.

7.4 Open Yard/Outdoor Storage

7.4.1 Combustible materials shall be neatly stacked, taking into consideration the stability of the stack (pile) and shall in no case be higher than 6 m (20 ft).

7.4.2 Solid combustible materials shall be separated into stacks not larger than 141 m^3 (5,000 ft^3).

7.4.3 Access roads between and around combustible/flammable storage stacks/areas within an outdoor storage yard shall be at least 4.5 m (15 ft) wide and shall be maintained free from accumulation of rubbish, equipment or other material. See Figure 7.2.

7.4.4 Access roads at storage yards shall be spaced at a maximum grid size of 15 m x 45.7 m (50 ft x 150 ft).

7.4.5 Flammable materials (e.g., paints, fuels, chemicals) shall be separated and stored in a designated flammable liquid storage area away from heat sources, electrical equipment and other ignition sources. See Section 7.7 for further information regarding storage of flammable and combustible materials.

7.4.6 Incompatible materials (e.g., flammables and oxidizers) shall not be stored together.

7.4.7 Vegetation (e.g., weeds and grass) shall be kept down and a regular procedure provided for periodic cleanup of the entire area.

7.4.8 Storage areas shall be graded to divert possible spills away from buildings and adjacent working areas, or shall be surrounded by a curb or earth dike at least 30 cm (12 inches) high. Provisions shall be made for draining off accumulations of ground/rain water and spills of flammable/combustible liquids when curbs or dikes are used.

7.5 Indoor Storage

7.5.1 All materials shall be stored and handled according to their fire characteristics.

7.5.2 Incompatible materials that may create a fire hazard shall be segregated by a barrier having a fire resistance of at least 1 hour.

7.5.3 Material shall be stacked to minimize the spread of fire and permit firefighting access. Aisle space shall be maintained to safely accommodate the widest vehicle that may be used within the building for firefighting purposes.

7.5.4 For building areas/rooms without sprinklers, a minimum clearance of 0.6 m (2 ft) shall be maintained between the ceiling and the top level of any stacked material below.

7.5.5 For building areas/rooms with sprinklers, a minimum clearance of 0.5 m (18 inches) shall be maintained between the top level of any stacked material and the sprinkler heads/deflectors.

7.5.6 Adequate clearance shall be maintained around lights and heating units to prevent ignition of combustible materials.

7.5.7 Combustible/flammable materials shall be maintained at a clearance of at least 0.6 m (2 ft) around fire-rated doors.

7.5.8 Materials shall not be stored/located where they obstruct access to exits or visibility of exit signs.

7.6 Control of Ignition Sources

7.6.1 Personnel shall take the precautions necessary to prevent ignition of materials, lubricants, fuels used in the job itself, etc., including as follows:

A. Temporary wiring shall be installed according to the provisions of NFPA 70. See Chapter I-11, *Hand Tools and Power Tools* of this manual.

B. Electrical equipment shall be regularly checked for defects.

C. Ground fault circuit interrupters (GFCIs) shall be provided where required per NFPA 70.

D. Smoking is permitted only in designated areas. "No Smoking" signs shall be prominently displayed, particularly where flammable or combustible materials are stored.

E. Welding equipment, asphalt kettles, heating appliances and other open flames or hot surfaces shall be segregated from flammable and combustible materials.

F. Precautions shall be implemented as needed to control indirect sources of ignition (e.g., hot welding slag falling from a height or sparks from a fire under an asphalt kettle).

G. Open fires and/or open burning of materials are strictly prohibited. Authorization shall be obtained from the SA Fire Protection Department.

H. Proper bonding and grounding techniques shall be used for any operation where static electricity could become an ignition source.

I. Ignition sources shall be immediately removed (e.g., engines shut down) if there is a hydrocarbon liquid or gas leak.

7.6.2 Noncombustible or flameproof welding screens shall be provided around/under cutting, welding or burning operations that are adjacent to or above hydrocarbon operations or flammable/combustible materials.

7.6.3 Any cutting, welding or burning operation requires an assigned qualified fire watch who shall remain in the work area during these activities and for no less than ½ hour after the work has finished.

7.6.4 Temporary enclosures constructed for the protection of operational components and equipment shall be of fire retardant materials.

7.7 Storage of Flammable and Combustible Liquids and Gases

7.7.1 Flammable liquids shall be kept in securely capped metal containers or steel drums upon which the contents are clearly marked.

7.7.2 Gasoline, acetone and other volatile liquids with flash points below 32 °C (90 °F) shall be kept in strong metal lockers located in well-ventilated, noncombustible huts or sheds. Drums containing flammable liquids shall be provided with proper bung vents.

7.7.3 Flammable materials shall not be stored in direct sunlight or in such a manner that they could be subject to heat above their autoignition temperature. Flammable materials may be stored in an open shelter with a roof and walls, provided the walls do not confine heat, smoke, flammable vapors or restrict firefighting access.

7.7.4 Flammable storage areas shall be secured (e.g., locked, fenced) and located at least 15 m (50 ft) away from the nearest building or storage area for other combustibles. No other materials shall be stored with flammable liquids.

7.7.5 Appropriate warning signs (e.g., "Flammable Liquids," "No Smoking," "Flammable – Keep Fire Away"), which shall include an internationally recognized hazard pictogram(s) (see example), shall be posted at flammable storage areas.



7.7.6 Outdoor storage of flammable and combustible liquids shall be in containers that do not exceed 227 L (60 gal) each and they shall not be stored in excess of 4,160 L (1,100 gal) in any one stack (pile) or area. Stacks or groups of containers shall be separated by a 1.5 m (5 ft) clearance and shall be a distance of 6 m (20 ft) from any building or structure.

7.7.7 There shall be a 3.6 m (12 ft) minimum width access way within 60 m (200 ft) of each outdoor stack or area of flammable or combustible containers to permit approach of firefighting apparatus.

7.7.8 Outdoor storage of flammable and combustible materials shall not be within 3 m (10 ft) of a building or structure. Outdoor storage areas shall be kept free of combustible materials for a minimum distance of 9 m (30 ft) from stored flammable/combustible materials.

7.7.9 Indoor storage of flammable and combustible liquids in excess of 95 L (25 gal) shall be contained in flammable liquid storage cabinets (see Figure 7.1) or specially designed rooms/buildings meeting the requirements of NFPA 30. No more than 95 L (25 gal) of flammable/combustible liquids shall be stored in an enclosed room outside of an approved flammable storage cabinet.



Figure 7.1 Painted Steel Flammable Storage Cabinet

7.7.10 No more than 227 L (60 gal) of flammable liquids and no more than 454 L (120 gal) of combustible liquids shall be stored in a single storage cabinet. Not more than three cabinets shall be located in a single storage area. All cabinets shall be grounded.

7.7.11 Flammable storage cabinets shall be properly labeled in noticeable lettering: "Flammable - Keep Fire Away" with internationally recognized hazard pictogram(s).

7.7.12 Flammable or combustible liquids shall not be stored in areas used for exits, stairways or in areas normally used for the safe passage of people.

7.7.13 Flammable gas cylinders (e.g., acetylene, propane) shall be segregated from other materials and preferably stored under an open, well-ventilated sun shade. Oxidizing gases (e.g., oxygen, chlorine) shall be stored separately. See Chapter I-9, *Compressed Gas Cylinders*, of this manual.

7.8 Handling of Flammable and Combustible Liquids and Gases

7.8.1 The following precautions shall be observed when handling flammable and combustible liquids:

A. Flammable and combustible liquids shall always be transported in closed metal containers. Plastic containers are prohibited for the storage of flammable and combustible liquids.

B. All containers of flammable and combustible liquids, whether at operational facilities, construction sites or inside buildings, shall be properly labeled. See Chapter I-10, *Hazardous Materials*, of this manual.

C. Containers holding a flammable liquid shall be Factory Mutual (FM) approved or Underwriters' Laboratories (UL) listed and labeled as such.

D. Portable gasoline containers shall be placed on the ground during filling and shall never be placed inside vehicle passenger compartments.

E. Containers shall be recapped immediately after use.

F. Gasoline shall not be used as a cleaning agent.

G. Gasoline- and diesel-powered equipment shall only be refueled in well-ventilated areas. Exhaust pipes shall be kept away from combustible/flammable materials. Engines shall be stopped before refueling takes place.

H. Areas where flammable or combustible liquids are transferred from one tank or container to another tank or container in quantities greater than 19 L (5 gal) shall be separated from activities that are a source of ignition (e.g., welding, grinding) by a distance of 7.6 m (25 ft) or by a barrier having a fire resistance of at least 1 hour. There shall be no open flames within 15 m (50 ft) of the transfer operation unless conditions warrant greater clearance.

I. Adequate natural or mechanical ventilation shall be provided to maintain the concentration of flammable/combustible vapor being transferred/handled at or below 10% of the lower explosive limit (LEL).

J. Containers shall be grounded and bonded during transfer of flammable or combustible liquids.

K. Cellular/mobile phones or other electronic devices shall not be used when transferring flammable liquids or when refueling vehicles.

7.8.2 Metallic parts (e.g., nozzles, fittings) of vacuum hoses, suction hoses, pumping equipment, inert gas hoses, steam lines, etc., when used in the cleaning or ventilation of tanks and vessels that contain hazardous concentrations of flammable gases or vapors, shall be bonded to the tank or vessel shell. Bonding devices shall not be attached or detached in hazardous concentrations of flammable gases or vapors.

7.8.3 Storage, handling and use of liquefied petroleum gas (LPG) shall comply with the requirements of NFPA 58 and Chapter I-9, *Compressed Gas Cylinders*, of this manual.

7.9 Portable Firefighting Equipment

7.9.1 Appropriate portable and mobile firefighting equipment shall be located in accordance with SAES-B-019 and as needed to address job site hazards (e.g., hot work activities). See Table 7.1 at the end of the chapter for more information on portable fire extinguishers.

7.9.2 Firefighting equipment shall be located at convenient, conspicuous locations and be easily accessible.

7.9.3 For flammable/combustible liquid storage areas located outdoors, portable fire extinguisher(s) suitable for the fire hazard involved shall be located not less than 7.6 m (25 ft) nor more than 23 m (75 ft) from the fire hazard.

7.9.4 For storage areas located outdoors without flammable or combustible liquids, portable fire extinguisher(s) suitable for the fire hazard involved shall be located so that maximum travel distance to the nearest unit does not exceed 30 m (100 ft).

7.9.5 Firefighting equipment shall be maintained in good working order and be protected from harsh environmental conditions as needed (e.g., cover wheeled fire extinguishers).

7.9.6 The area around firefighting equipment (e.g., fire extinguishers, fire hydrants) shall be kept clear so that they are readily accessible in case of an emergency.

7.9.7 All applicable personnel (including contractor personnel) shall be aware of the firefighting equipment available on-site and shall be trained in its use.

7.10 Inspection and Maintenance of Fire Protection Systems and Equipment

7.10.1 Fire protection systems and equipment, whether temporary or permanent, shall be inspected and maintained in accordance with GI 1781.001.

7.10.2 Equipment inspection records shall be maintained (an inspection log book and equipment inspection tags shall be used at a minimum) and made available for review upon request by SA.

7.10.3 Any fire protection system component or firefighting equipment that does not pass inspection shall be immediately replaced or repaired.

7.10.4 Safety red shall be the identification color for all fire protection equipment per SAES-B-067.

7.11 Housekeeping

7.11.1 Waste shall be removed from the work site at regular intervals and at the end of each work day.

7.11.2 Storage of combustible materials shall not be allowed underneath buildings or stairways.

7.11.3 Metal bins with close-fitting lids shall be provided and used for disposal of oily rags, wood shavings and other highly combustible waste. Oily rags shall not be disposed of in the same container as other combustible waste.

7.11.4 Contents of ash trays shall not be mixed with other combustible or flammable waste.

7.11.5 Noncombustible absorbents shall be used to remove oil spills or leaks.

Fire Extinguisher

	Potassium Bicarbonate (Purple K) Cartridge Operated	Water Type Stored Pressure	Carbon Dioxide (CO_2) Stored Pressure	Multi-Purpose ABC Dry Chemical Cartridge Operated
Class A Fires Ordinary combustibles (wood, paper, trash, etc.)	No	Yes	No	Yes
Class B Fires Flammables and combustibles (e.g., gasoline, oil, paint, grease)	Yes	No	Yes	Yes
Class C Fires Energized electrical equipment	Yes	No	Yes	Yes
Range	1.5-6 m (5-20 ft)	9-12 m (30-40 ft)	1-2.4 m (3-8 ft)	1.5-6 m (5-20 ft)
SA Material Number (MN)	1000124972 (125 lb. Wheeled) 1000124945 (30 lb. Type)	1000124949	1000808216	1000124942

Inspection: Inspections of fire extinguishers shall be performed monthly by the SA proponent organization in compliance with GI 1781.001, *Inspection, Testing and Maintenance of Fire Protection Equipment*, Supplement 1. Contractor shall perform inspections if proponents are not normally on-site.

During inspections check if extinguisher is in correct location, access is unobstructed and extinguisher is clearly visible. Check contents gauges, where fitted, to see if extinguisher is usable. Check for signs of leakage, corrosion or physical damage. Check if seals are unbroken and up-to-date inspection tag is fitted. If in doubt, contact your local Fire Control Unit.

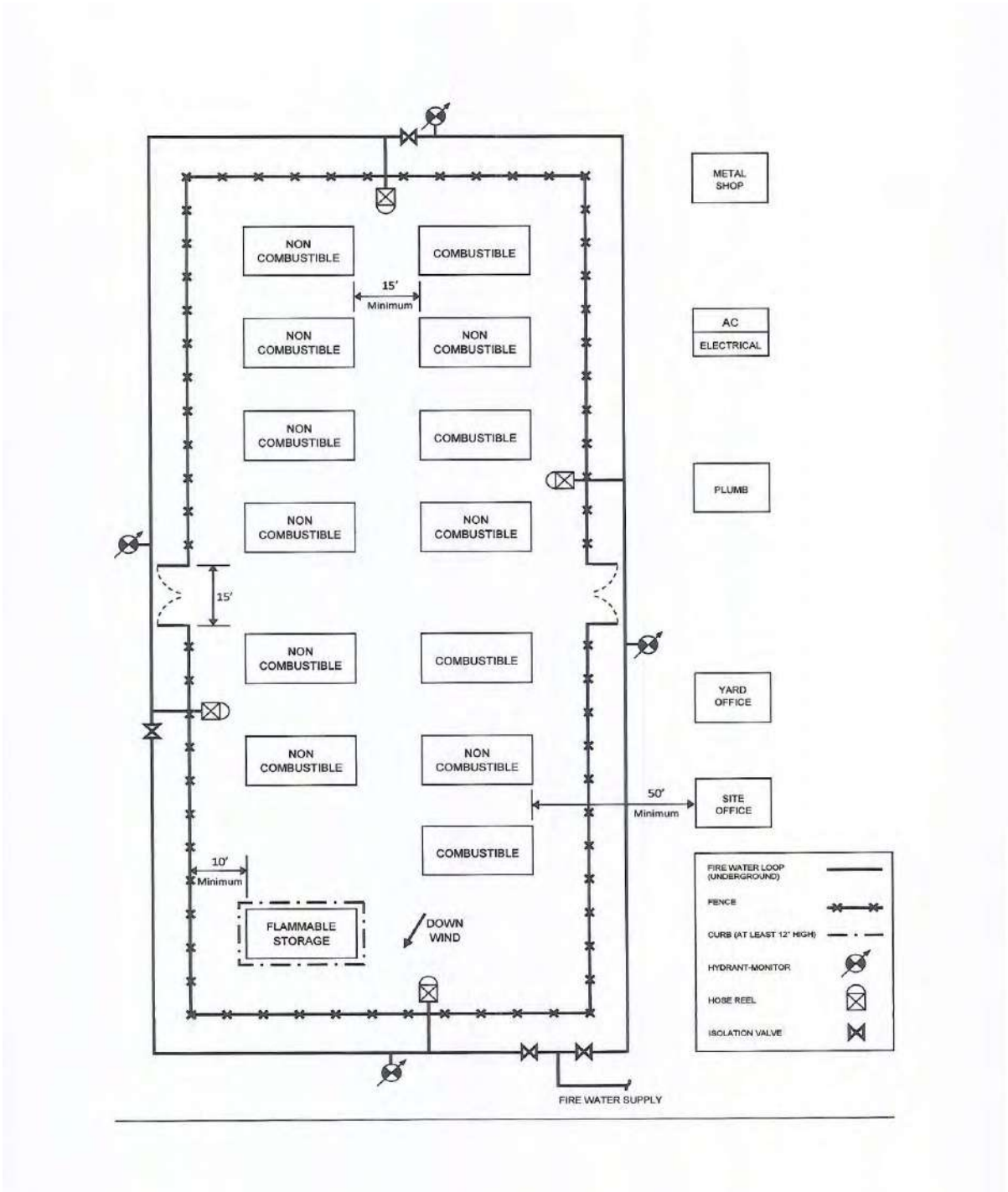

Figure 7.2 Typical Construction Materials Storeyard

Sample Fire Prevention Inspection Checklist

Facility:	Plant/Unit:
Completed By:	Date/Time:

Yes	No	Condition
		Housekeeping
☐	☐	• Construction materials storage orderly
☐	☐	• Combustible scrap/trash removed regularly
☐	☐	• Metal containers with covers provided for disposal of oily or paint-soaked rags
		Smoking
☐	☐	• NO SMOKING signs posted
☐	☐	• NO SMOKING regulations enforced
		Electrical
☐	☐	• Temporary wiring installed per NEC
☐	☐	• Wiring and connections to junction boxes, panels, equipment, etc., in good condition
☐	☐	• Overcurrent protective devices (fuses, circuit breakers) in good condition
☐	☐	• GFCIs provided where required
		Welding and Cutting
☐	☐	• Welding, cutting, or brazing in progress?
☐	☐	• Any combustible materials exposed by these operations
☐	☐	• Fire watch provided during, and for at least 30 minutes after, these operations
☐	☐	• Portable fire extinguisher or fire hose available where operations are carried on
		Flammable/Combustible Liquids
☐	☐	• Flammable/combustible liquids stored and dispensed in a satisfactory manner
☐	☐	• Adequate ventilation provided where flammables and other chemicals are in use
		Exits
☐	☐	• Fire exits unobstructed, including access ways and discharge areas
☐	☐	• All exits clearly marked
☐	☐	• All exits adequately lighted
☐	☐	• Stair exit fire doors in good operating condition
☐	☐	• Adequate egress provided from uppermost work areas
		Construction Offices, Trailers, Sheds
☐	☐	• Combustible offices, trailers, and sheds located at least 10 m (30 ft) away from major buildings and materials storage
☐	☐	• Heating devices in offices, trailers, and sheds "approved" type
☐	☐	• Heating devices properly installed and vented
☐	☐	• Fuel cylinders/lines for heating devices protected against vehicular damage

Yes	No	Condition
		Extinguishers and Small Hose
☐	☐	• Sufficient portable extinguishers of the proper type provided throughout
☐	☐	• Extinguishers and small hoses kept in good operating condition
☐	☐	• Equipment unobstructed and location highlighted
☐	☐	• Equipment protected from rain, dust, construction activity, paint spray, etc.
☐	☐	• Selected personnel trained to operate extinguishers and small hose
		Sprinkler Systems
☐	☐	• Sprinkler installation progressing with construction
☐	☐	• Sprinkler control valves accessible, labeled and open where necessary
☐	☐	• Sprinkler alarms in service
☐	☐	• Sprinkler system pumper connections clearly marked and accessible to Fire Dept
		Hydrants
☐	☐	• Hydrants unobstructed and accessible to Fire Department
☐	☐	• Hydrants in good operating condition
		Standpipes
☐	☐	• Standpipe systems installed and in service up to highest level of operations
☐	☐	• Standpipe hose connections unobstructed and accessible to Fire Department
☐	☐	• Standpipe pumper connections clearly marked and accessible to Fire Department
		Fire Alarms
☐	☐	• Standard procedure established for reporting a fire
☐	☐	• All workers instructed in this procedure
☐	☐	• Audible alarm in operation to alert workers of a fire on the site
☐	☐	• Emergency communication capability located nearby
☐	☐	• Has the Fire Department visited the site during the past month?
		Tarpaulins
☐	☐	• Are tarpaulins used for cover/enclosure?
☐	☐	• Tarpaulins in use flame-resistant type
☐	☐	• Tarpaulins in use tightly secured to prevent contact with ignition sources
		Other:

8. Traffic and Vehicle Safety

8.1 Purpose

This chapter describes minimum requirements for operating motor vehicles within areas under Saudi Aramco (SA) jurisdiction, including driver performance and vehicle maintenance.

8.2 References

SA General Instructions (GIs):

GI 6.000, *Incident Notification, Reporting & Investigation*

GI 6.030, *Traffic and Vehicle Safety*

GI 6.036, *Journey Management Program*

GI 710.005, *Vehicle Stickers and Heavy Equipment Access to Company Facilities*

Safety Management Guide (SMG) 06-009, *Journey Management Program*

SA *Safety Handbook*

8.3 General Requirements

8.3.1 All contractors are required to have a written Journey Management Program (JMP) aligned to GI 6.036 and SMG 06-009.

8.3.2 Contractors/Sub-contractors are responsible for developing their own JMP which shall be reviewed and approved by SA proponent organizations.

8.3.3 Only authorized drivers (SA or contractor) shall operate motor vehicles. Operator credentials shall be verified prior to their being allowed to operate motor vehicles.

8.3.4 Drivers operating motor vehicles (either SA owned/leased or contractor owned/leased) on highways and company property and/or work sites shall have in their possession a valid Saudi Arabian Government (SAG) driving license.

8.3.5 SA drivers shall complete and pass the SA Driver Improvement Program and shall have completed the Driver Improvement Refresher Seminar within the period stipulated in GI 6.030.

8.3.6 Contractor and subcontractor drivers shall complete and pass an

approved driver improvement program such as Qyadati Program*, in line with Schedule D of standard contracts.

*Qyadati is a free, web-based defensive driving awareness program (https://qyadati.com) equivalent to SA Driver Improvement Program that includes different training tracks, such as light vehicles, trucks, and buses and it's offered in different languages that are most commonly spoken in Saudi Arabia: Arabic, English, Hindi, Urdu, Indonesian, and Tagalog.

SA Contractors will be able to create their own accounts within Qyadati to register their employees, track their training progress, ensure completion, and generate certificates and reports for Saudi Aramco organizations' compliance reviews.

8.3.7 Drivers (SA and contractor) shall be held accountable for the safe operation of the vehicle.

8.3.8 Drivers shall:

A. Abide by all SAG traffic regulations and SA traffic requirements at all times in all locations.

B. Wear seat belts at all times and ensure that all passengers wear their seat belts as well.

C. Report any damage immediately to their supervisor.

D. Perform a 360-degree walk around before getting into the vehicle.

E. Ensure the vehicle is safe to operate and contains all required safety equipment prior to use.

F. Ensure the vehicle is properly equipped before operating in remote locations.

G. Not exceed the posted speed limit at any time.

H. Not use a cell phone, eat or drink while driving.

I. Properly transport materials and ensure loads do not exceed the vehicle manufacturer's design load capacity. Loads shall be properly secured and tied down. Materials shall not extend over the sides of the vehicle. Loads extending beyond the front or rear shall be marked with a red flag and trailers shall be equipped with visible brake and taillights.

J. Secure loose materials in the driving compartment or truck cargo area. Hard hats and other loose materials shall not be placed on the rear

window shelf.

K. Ensure unauthorized persons are not transported in vehicles.

L. Not transport more passengers than the number of seat belts provided in the vehicle.

M. Not transport passengers in the rear of pickups or on truck beds.

N. Only park in designated parking areas. Parked vehicles shall not obstruct other vehicles, roadways, access ways, or fixed firefighting installations.

O. Reduce vehicle speed under hazardous weather or road conditions (see GI 6.030).

P. Not leave the vehicle unattended while the engine is running.

Q. Always set the parking or emergency brake when the vehicle is parked.

8.3.9 All vehicles entering a SA restricted area shall have a valid SA inspection sticker as per GI 710.005.

8.3.10 Vehicles shall be re-inspected when its SA inspection sticker expires. If the vehicle fails inspection due to mechanical reasons, it shall be repaired and inspected before a new sticker is issued.

8.3.11 All motor vehicles shall be serviced and repaired according to the manufacturer's maintenance schedule.

8.4 Vehicle Inspection

8.4.1 Drivers shall inspect vehicles on a monthly basis using a detailed inspection checklist. The checklist items shall cover, but not be limited to, the availability and/or condition of:

A. Two reflective warning triangles.

B. Windows, windshields, inside and outside rearview mirrors, and windshield wipers.

C. Headlights, taillights, brake lights, turn signal lights, horn, etc.

D. Foot and emergency brakes.

E. Tires, wheels, spare tire(s) and jack, and wrench.

F. Vehicle fluids (e.g., radiator coolant*, oil, brake fluid, transmission oil [checked with engine running], steering fluid, wiper washer water, and

distilled water for the battery).

*NOTE: The driver shall check the radiator coolant level only when the engine is cool. When necessary, coolant shall be added to the level marked on the overflow expansion tank, if provided.

8.5 Vehicle Monitoring System

8.5.1 In line with Schedule D of standard contracts, contractor shall provide a Vehicle Monitoring System (VMS) to monitor all contractor vehicles used in performance of the work. The VMS shall include a comprehensive vehicle location, monitoring software system, and all associated devices in contractor vehicles. The VMS shall be deployed to track and monitor vehicle information including location, license plate, user and driver, vehicle speed, rapid acceleration and rapid deceleration, seatbelt usage, and other driving behavior through a Global Positioning System (GPS). The VMS shall include SOS Alert Buttons with (GPS) location beacons in all contractor vehicles.

8.5.2 The VMS requirement shall be applicable to all vehicles used by the contractor and all of its subcontractors in the performance of the work, including vehicles located at each work site and those used for transportation to and from each work site.

8.5.3 The VMS shall enable contractor to issue real-time warnings and violations to the drivers, alerting drivers of any traffic violation. All data, including violations and warnings, collected through this system shall be stored and provided to Saudi Aramco Proponent Organization (SAPO) on a monthly basis or upon request.

8.5.4 The VMS shall be linked to the contractor's safety incentive and disciplinary program for drivers and shall allow real-time monitoring of VMS-fitted vehicles, facilitating communication with emergency control centers.

8.6 Motor Vehicle Accidents

8.6.1 Motor vehicle accidents (MVAs) that occur on SA premises or SA project sites shall be reported to the nearest SA 911 Emergency Center by telephone, radio, or messenger.

8.6.2 The driver shall immediately inform their supervisor of an MVA, after meeting the requirements of SA Industrial Security and/or Saudi Arabian Government (SAG) police.

8.6.3 Drivers shall not leave the scene of an incident or move the vehicle after a collision until released by the SAG police officer or a SA Industrial Security representative.

8.6.4 Reflective triangles shall be used to warn approaching traffic if a damaged vehicle is blocking traffic or is stopped on the road.

8.6.5 GI 6.000 lists further instructions and procedures that shall be followed.

8.6.6 Include an MVA pre-incident plan in site-specific Emergency Response Plans.

8.7 Desert Driving (Off-Road Driving)

8.7.1 Off-road vehicle operators shall receive specific training in off-road driving and survival techniques. Contractor companies shall provide their own training and testing for off-road travel.

8.7.2 Off-road vehicle operators shall inform their immediate supervisors of their destination, route, and expected time of return.

8.7.3 Personnel lost or stranded in the desert shall stay with the vehicle.

8.7.4 Off-road vehicles shall be in good condition and, as a minimum, be equipped with the following:

A. Compass and/or global positioning system (GPS) unit and appropriate maps.

B. Adequate spare fuel and oil.

C. Communication equipment.

D. Tools and equipment for emergency use (shovel, sand boards/mats, rope, sling, shackles, etc.) and two properly inflated spare sand tires.

E. Sufficient food and drinking water to last until rescue occurs, if stranded.

F. Sufficient materials to create shade.

9. Compressed Gas Cylinders

9.1 Purpose

This chapter describes minimum requirements for safe storage, handling and transportation of compressed gas cylinders.

9.2 References

Saudi Aramco (SA) Engineering Standards (SAESs):

SAES-B-055, *Plant Layout*

SAES-B-067, *Safety Identification and Safety Colors*

SA Safety Handbook, *Minimum Safety Rules*

SA Supply Chain Management Manual

CU 22.01, *Dangerous Goods: Processing and Handling Gas and Gas Cylinders*

National Fire Protection Association (NFPA):

NFPA 70, *National Electrical Code*

9.3 General Requirements

9.3.1 Compressed gas cylinders shall be properly marked or labeled, including their contents, with lettering in Arabic and English as per SAES-B-067 and CU 22.01. This includes all industrial, medical, laboratory and aviation bottled gases.

9.3.2 The supplier's identification tag shall be used to verify the contents of a cylinder.

9.3.3 Cylinders shall not be placed in confined spaces or adjacent to excavations.

9.3.4 Cylinders shall be inspected for damage, severe corrosion, valve leakage and current hydrotest date prior to each use.

9.3.5 Damaged or defective cylinders shall not be used.

9.3.6 A leaking cylinder shall be immediately removed to an open space, clear of all buildings, people and any potential source of ignition.

9.3.7 All cylinders shall have an approved pressure-reducing regulator with check valve connected to the cylinder valve.

9.3.8 Regulators shall be closed (adjusting screws backed out) prior to connection to the cylinder valve.

9.3.9 The cylinder valve shall always be opened slowly to prevent damage to the regulator.

9.3.10 Valves on cylinders shall not be opened more than 1½ turns.

9.3.11 Threads on fittings shall correspond to cylinder valve outlets.

9.3.12 The cylinder valve shall always be closed before attempting to stop a leak.

9.3.13 Oil, grease or other hydrocarbons shall not be used as a lubricant on valves, fittings or threaded attachments.

9.3.14 Hose connections shall be kept free of grease and oil.

9.3.15 Compressed gas cylinders used for oxygen-fuel welding and cutting shall be per Chapter II-10, *Cutting, Welding and Brazing*, of this manual.

9.4 Storage

9.4.1 Cylinders shall be stored in a safe and accessible location. Cylinder storage locations shall be a dry, well-ventilated area prepared and reserved for that purpose.

9.4.2 Location and/or spacing requirements for cylinder storage areas shall be in accordance with SAES-B-055.

9.4.3 Flammable/combustible substances (e.g., oil, grease, volatile liquids) and corrosive substances shall not be stored in the same area as gas cylinders.

9.4.4 Oxygen cylinders and cylinders containing other oxidizers (e.g., chlorine, nitrous oxide) shall be stored at least 6.1 m (20 ft) from flammable gas cylinders or they shall be separated by a ½-hour fire rated barrier at least 1.5 m (5 ft) high.

9.4.5 Smoking and other sources of ignition are prohibited near storage areas.

9.4.6 Storage areas shall have Arabic and English “No Smoking” and “Gas Cylinder Storage Area” signs prominently displayed per SAES-B-067 and CU 22.01.

9.4.8 Cylinders shall be chained or otherwise secured in an upright position; use bottle/cylinder racks wherever possible.

9.4.9 Cylinders stored in the open shall not have direct contact with the ground, exposure to extreme weather or contact with water.

9.4.10 The quantity of cylinders shall be kept to a minimum at job site locations. Bulk storage (e.g., large inventories) shall be located off-site.

9.4.11 When regulators are removed from the cylinders, they shall be considered "not in use" or "stored" and cylinder valve caps shall be put back in place.

9.4.12 Water and dry chemical fire extinguishers shall be immediately available within 15 m (50 ft) of the storage area.

9.4.13 Cylinders shall not be stored at temperatures or locations that could result in the temperature of the cylinder exceeding 54 °C (130 °F). Outside cylinder storage areas shall have protective enclosures or sun shelters installed as needed to prevent cylinders from reaching 54 °C (130 °F).

9.4.14 Cylinders shall not be stored in a location where they would be subject to direct flames or other heat sources, such as furnaces.

9.4.15 Cylinder storage shall be arranged so that cylinders are used in the order in which they are received from the supplier.

9.4.16 Empty and full cylinders shall be stored separately with empty cylinders plainly marked to avoid confusion.

9.4.17 Cylinders (empty and full) shall be segregated according to the type of gas they contain.

9.5 Storage Rooms

9.5.1 Cylinder storage rooms shall be sufficiently ventilated so that explosive concentrations of gas cannot accumulate.

9.5.2 Electrical systems (wiring, connections, conduits, lighting fixtures, etc.) in cylinder storage rooms shall meet *National Electrical Code* (NFPA 70) requirements for hazardous areas.

9.6 Handling of Cylinders

9.6.1 A cylinder shall never be lifted by its valve.

9.6.2 A protective cap shall remain on the valve when the cylinder is not in use.

9.6.3 A cylinder's valve shall be fully closed before a cylinder is moved.

9.6.4 Unless a trolley or special carrier is used, regulators and hoses shall be detached and cylinder valve caps put back in place before moving.

9.6.5 If cylinders are to be lifted by a crane, specially designed bottle carriers with lifting eyes shall be used. Cylinders shall not be lifted with electromagnetic devices, slings, chains or ropes.

9.6.6 Cylinders shall not be struck together, dropped, thrown, dragged, used as rollers or as a support.

9.6.7 Cylinders involved in a fire shall be returned immediately to the supplier, alerting the supplier that the cylinders were exposed to a fire.

9.6.8 Cylinders, even those marked empty, shall be treated as a possible hazard and handled with great care. No cylinder is completely empty of gas.

9.6.9 Personnel handling toxic gas cylinders shall be trained in the hazards of the gas they are handling and how to use a self-contained breathing apparatus (SCBA).

9.6.10 Empty cylinders shall be returned to the supplier with the valves closed and cylinder valve caps in place.

9.7 Transportation

9.7.1 Cylinder trolleys, material baskets, cylinder racks and other proper types of equipment shall be used to transport cylinders.

9.7.2 All cylinders being transported by vehicle shall have cylinder valve caps in place, be positioned in an upright position and be firmly secured to prevent movement.

9.7.3 Vehicles transporting cylinders shall be equipped with the required firefighting and first aid equipment.

10. Hazardous Materials

10.1 Purpose

This chapter describes minimum requirements for the safe use, handling, storage and disposal of hazardous materials.

10.2 References

Saudi Aramco (SA) General Instructions (GIs):

GI 2.100, *Work Permit System*

GI 2.709, *Gas Testing Procedure*

GI 150.001, *Asbestos Hazard Management*

GI 150.100, *Hazardous Materials Communication (HAZCOM) Program*

GI 150.110, *Periodic Occupational Physical Examination Programs*

GI 430.001, *Waste Management*

GI 1780.001, *Atmosphere-Supplying Respirators*

SA Engineering Standards (SAESs):

SAES-B-067, *Safety Identification and Safety Colors*

SAES-B-069, *Emergency Eyewashes and Showers*

SA Engineering Procedure (SAEP):

SAEP-358, *Management of Technologically Enhanced Naturally Occurring Radioactive Material (NORM)*

SA Chemical Hazard Bulletins (CHBs)

American National Standards Institute (ANSI)/American Society of Safety Engineers (ASSE):

ANSI/ASSE Z390.1, *Accepted Practices for Hydrogen Sulfide (H_2S) Training Programs*

National Fire Protection Association (NFPA) Standard:

NFPA 704, *Standard System for the Identification of the Hazards of Materials for Emergency Response*

10.3 General Requirements

10.3.1 When using/handling potentially harmful chemicals or hazardous substances, precautions shall be taken to ensure that personnel do not swallow, inhale or allow it to contact their skin.

10.3.2 Hands shall be washed thoroughly after handling chemicals or hazardous substances.

10.3.3 Personnel shall be trained to remove contaminated clothing, promptly flush affected areas with clean water for at least 15 minutes and seek medical attention when harmful chemicals contact the skin or eyes.

10.3.4 Chemicals shall not be subjected to undue physical shock, pressure or heat.

10.3.5 Excess chemicals no longer needed shall be safely disposed of or recycled per GI 430.001.

10.3.6 Personal protective equipment (PPE), including respiratory protection equipment, as stipulated in the relevant Material Safety Data Sheet (MSDS) or Chemical Hazard Bulletin (CHB), shall be used when working with chemicals or hazardous substances. See Chapter I-3, *Personal Protective Equipment (PPE)*, of this manual.

10.3.7 When handling volatile liquids, the threshold limit value (TLV) of the vapor shall be determined and not exceeded. When exhaust ventilation is unavailable, good mechanical ventilation shall be provided or the work shall be performed outdoors.

10.3.8 Exhaust ventilation, fans, blowers and proper handling procedures shall be used to keep personnel from breathing hazardous vapors and/or dust. Respiratory protection shall be provided and used when necessary.

10.3.9 Respiratory protection equipment shall be used when chemical concentrations in air exceed the TLV.

10.3.10 Equipment, piping or filter cartridges containing pyrophoric materials (e.g., iron sulfide) shall be kept wet to prevent spontaneous ignition upon opening of equipment and contact with air.

10.3.11 Emergency eye wash stations and showers shall:

A. Be provided when eyes or skin may be exposed to chemicals or hazardous substances.

B. Be installed and maintained per SAES-B-069.

10.3.12 Only the necessary amount of hazardous materials shall be stored at the job site, usually not more than a 1-day supply.

10.3.13 Hazardous materials shall not be allowed to accumulate. Extra amounts shall be removed from the work area.

10.3.14 Waste (e.g., slop liquids and trash) shall be immediately removed from the work area.

10.3.15 Smoking and use of devices not classified as explosion proof are prohibited near flammable liquids or finely divided combustible solids.

10.3.16 Fire extinguishers shall be available. See Chapter I-7, *Fire Prevention*.

10.4 Identification and Labeling

10.4.1 All materials or substances (gas, liquid or solid) produced in or brought into a facility or project site shall be identified and evaluated for their potential physical or health hazards.

10.4.2 The SA proponent organization (SAPO) and/or contractor company shall prepare a complete inventory of all current chemicals and products (e.g., liquids, solids, powders, pastes, gases) at the facility or project site.

10.4.3 For construction or maintenance projects, the inventory shall be prepared at the beginning of the project and each quarter thereafter until project completion. All inventory sheets shall be forwarded to the SAPO and maintained on file until completion of the project.

10.4.4 Each container of hazardous material shall be properly labeled to indicate its contents and hazards (see Figure 10.1 for an example). Hazardous materials received at a facility or project site without proper labels shall be set aside and not distributed for use until properly labeled. See GI 150.100 for typical hazardous chemical labels.

10.4.5 Portable containers into which hazardous chemicals are transferred that are intended only for use by the employee who performs the transfer shall also be identified as to their contents (e.g., acetone, gasoline).

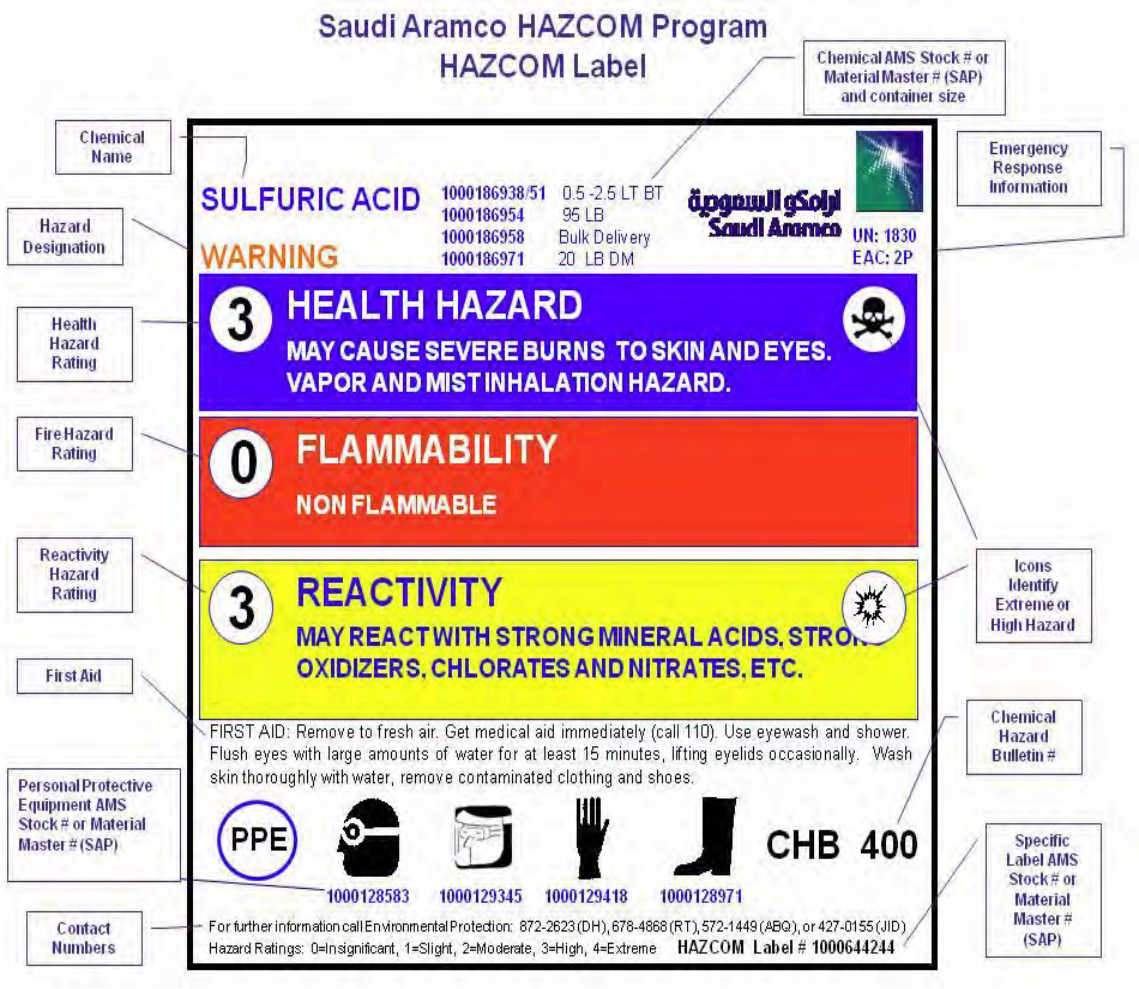

Figure 10.1 Example Hazardous Material Label

10.4.6 Labels shall be prominently located on each container of hazardous material so as to be legible while the container is in the upright position.

10.4.7 Labels on containers exposed to direct sunlight and/or adverse weather shall be periodically inspected to verify that the label is clear and conspicuous and has not been damaged or destroyed.

10.4.8 If a labeled container is covered by a secondary container or a covering that remains in place while the contents of the container are withdrawn or used, the required labels shall also appear on the secondary container or covering.

10.4.9 Containers of mixtures shall be labeled with the common name and listed hazards of the mixture or with the chemical name listed on the CHB/MSDS for each toxic or hazardous substance in the mixture.

10.4.10 Unlabeled containers found in the workplace shall be tested and properly labeled or disposed of per GI 430.001.

10.5 Material Safety Data Sheets/Chemical Hazard Bulletins

10.5.1 Complete and current MSDSs/CHBs for each chemical or hazardous substance stored/used on site shall be readily accessible (e.g., at the location of the material storage or handling areas) to employees and contractors and to emergency response personnel (e.g., firefighters, security personnel, emergency medical personnel). See Figure 10.2 for an example of a CHB.

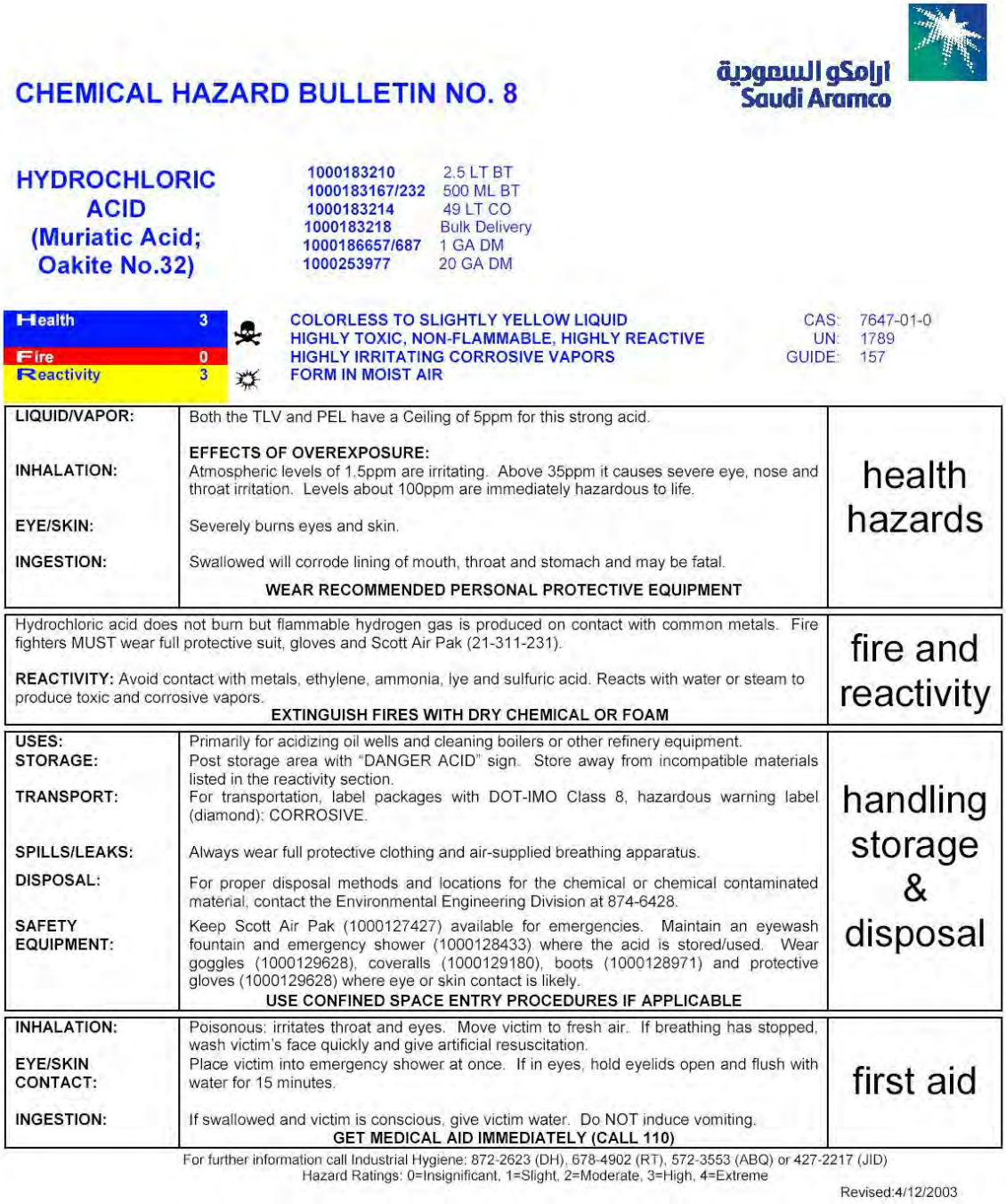

CHEMICAL HAZARD BULLETIN NO. 8

Saudi Aramco

HYDROCHLORIC ACID (Muriatic Acid; Oakite No.32)

1000183210	2.5 LT BT
1000183167/232	500 ML BT
1000183214	49 LT CO
1000183218	Bulk Delivery
1000186657/687	1 GA DM
1000253977	20 GA DM

Health	3
Fire	0
Reactivity	3

COLORLESS TO SLIGHTLY YELLOW LIQUID
HIGHLY TOXIC, NON-FLAMMABLE, HIGHLY REACTIVE
HIGHLY IRRITATING CORROSIVE VAPORS
FORM IN MOIST AIR

CAS: 7647-01-0
UN: 1789
GUIDE: 157

LIQUID/VAPOR: INHALATION: EYE/SKIN: INGESTION:	Both the TLV and PEL have a Ceiling of 5ppm for this strong acid. **EFFECTS OF OVEREXPOSURE:** Atmospheric levels of 1.5ppm are irritating. Above 35ppm it causes severe eye, nose and throat irritation. Levels about 100ppm are immediately hazardous to life. Severely burns eyes and skin. Swallowed will corrode lining of mouth, throat and stomach and may be fatal. **WEAR RECOMMENDED PERSONAL PROTECTIVE EQUIPMENT**	health hazards
Hydrochloric acid does not burn but flammable hydrogen gas is produced on contact with common metals. Fire fighters MUST wear full protective suit, gloves and Scott Air Pak (21-311-231). **REACTIVITY:** Avoid contact with metals, ethylene, ammonia, lye and sulfuric acid. Reacts with water or steam to produce toxic and corrosive vapors. **EXTINGUISH FIRES WITH DRY CHEMICAL OR FOAM**		fire and reactivity
USES: STORAGE: TRANSPORT: SPILLS/LEAKS: DISPOSAL: SAFETY EQUIPMENT:	Primarily for acidizing oil wells and cleaning boilers or other refinery equipment. Post storage area with "DANGER ACID" sign. Store away from incompatible materials listed in the reactivity section. For transportation, label packages with DOT-IMO Class 8, hazardous warning label (diamond): CORROSIVE. Always wear full protective clothing and air-supplied breathing apparatus. For proper disposal methods and locations for the chemical or chemical contaminated material, contact the Environmental Engineering Division at 874-6428. Keep Scott Air Pak (1000127427) available for emergencies. Maintain an eyewash fountain and emergency shower (1000128433) where the acid is stored/used. Wear goggles (1000129628), coveralls (1000129180), boots (1000128971) and protective gloves (1000129628) where eye or skin contact is likely. **USE CONFINED SPACE ENTRY PROCEDURES IF APPLICABLE**	handling storage & disposal
INHALATION: EYE/SKIN CONTACT: INGESTION:	Poisonous: irritates throat and eyes. Move victim to fresh air. If breathing has stopped, wash victim's face quickly and give artificial resuscitation. Place victim into emergency shower at once. If in eyes, hold eyelids open and flush with water for 15 minutes. If swallowed and victim is conscious, give victim water. Do NOT induce vomiting. **GET MEDICAL AID IMMEDIATELY (CALL 110)**	first aid

For further information call Industrial Hygiene: 872-2623 (DH), 678-4902 (RT), 572-3553 (ABQ) or 427-2217 (JID)
Hazard Ratings: 0=Insignificant, 1=Slight, 2=Moderate, 3=High, 4=Extreme

Revised:4/12/2003

Figure 10.2 Sample CHB

10.5.2 CHBs printed directly from the SA Environmental Protection Department (EPD) HAZCOM intranet site shall be printed in color to properly show the color-coded hazard ratings.

10.5.3 SA and contractor employees shall be provided with effective training on the proper use and precautions for hazardous materials in their work area. This training shall be at the time of their initial assignment and whenever a new hazardous material that the employees have not previously been trained on is introduced into their work area. Chemical-specific information identified from labels, MSDSs and/or CHBs shall be included in this training, which shall be documented.

10.6 Transportation, Storage and Disposal

10.6.1 Hazardous materials shall be protected against shock, incidental mixing with other materials, damage to containers, undue heat from the sun or other sources, and theft during transportation.

10.6.2 Vehicles transporting hazardous materials shall be suitably labeled as such and shall not be left unattended. Drivers shall have copies of the MSDS(s) and/or CHB(s) for the material(s) being transported with them at all times.

10.6.3 Specific storage and handling recommendations for hazardous materials provided in MSDSs and/or CHBs shall be followed.

10.6.4 MSDSs and/or CHBs shall be referenced to identify which chemicals are reactive to each other prior to transportation or storage.

10.6.5 Chemicals shall not be allowed to inadvertently mix with other substances during transportation, storage or use.

10.6.6 Incompatible chemicals shall not be stored near each other or be mixed together. Reactive substances shall not be stored near flammable or corrosive materials.

10.6.7 Combustible and flammable materials shall be stored in accordance with Chapter I-7, *Fire Prevention*.

10.6.8 Chemical containers in storage cabinets shall be inspected periodically for container integrity.

10.6.9 Toxic substances shall be segregated in well-identified areas with proper exhaust ventilation.

10.6.10 Hazardous materials shall be stored in containers that are safe for storage, transportation and use.

10.6.11 Empty hazardous material containers shall be washed free of the material or destroyed. Liquids used to wash containers shall be properly disposed of as liquid hazardous waste in accordance with GI 430.001.

10.6.12 Spills shall be promptly cleaned up by personnel using the appropriate PPE. Proper disposal of contaminated materials shall be in accordance with EPD requirements and GI 430.001.

10.6.13 Personnel who handle, store, use or dispose of hazardous materials/waste shall receive hazard communication (HAZCOM) training. See GI 150.100.

10.6.14 When a contractor is required to dispose of waste determined to be hazardous, the contractor shall follow Saudi Arabian Government regulations and SA requirements in disposing of hazardous waste materials. Contractor shall provide SA with documented evidence that hazardous wastes have been properly disposed of at a licensed hazardous waste disposal facility.

10.7 Hydrogen Sulfide (H_2S)

10.7.1 Air supplied respiratory protection equipment (e.g., self-contained breathing apparatus [SCBA], air-line respirator) shall be made available to personnel who may be exposed to an H_2S release. See GI 1780.001.

10.7.2 Air supplied respiratory protection equipment shall be worn by all personnel in an area where the H_2S concentration equals or exceeds 10 parts per million (ppm).

10.7.3 Personnel shall not rely on their sense of smell to detect H_2S because higher concentrations can quickly deaden the sense of smell.

10.7.4 Personnel working in areas with H_2S shall be trained on the hazards and effects of H_2S exposure and proper use of applicable respiratory protection equipment.

10.7.5 Personnel shall not open or enter lines, vessels, tanks or equipment that contains (or has the potential to contain) H_2S without a properly prepared procedure. The procedure shall include, but not be limited to:

- Properly completed work permits (e.g., Release of Hazardous Liquids or Gases permit).
- Properly calibrated H_2S-detection equipment and personal monitors.
- Testing of the atmosphere inside the vessel/equipment prior to opening and/or entering the space per GI 2.709.
- Available standby personnel who are trained on the hazards and affects of H_2S exposure, how to use an SCBA and performing first aid/basic life support (BLS).
- Use of SCBA or air-line respirator with 5-minute escape pack by personnel entering any line, vessel or equipment with H_2S concentrations at or above 10 ppm. See Chapter I-6, *Confined Spaces*.
- Notification of personnel in the immediate area before work begins.

- Use of the "buddy system" if atmospheric testing indicates H_2S levels at or above 10 ppm.
- Observance of wind direction.
- Controls used to keep nonessential personnel upwind or crosswind from the work site location.
- Contingency plan/emergency response procedures in the event of an H_2S release or personnel exposure to elevated levels of H_2S.
- Preplanned escape route(s) and assembly areas in the event of an emergency.
- Specific methods for alerting personnel during an emergency condition.

10.7.6 Personal H_2S monitors shall be worn as required by local SAPO procedures in areas where H_2S concentrations have the potential to equal or exceed 10 ppm.

10.7.7 Personnel shall use calibrated gas monitoring equipment when performing work in areas where there is an H_2S hazard.

10.7.8 Warning signs and barricades shall be posted advising personnel of the potential presence of H_2S in the work area.

10.7.9 Personnel shall not be allowed to enter areas where the atmosphere contains an H_2S concentration of 100 ppm or greater, except in emergencies. An atmosphere containing 100 ppm of H_2S is considered immediately dangerous to life or health (IDLH).

10.7.10 Only properly trained personnel wearing an SCBA shall attempt to rescue a victim of H_2S exposure.

10.7.11 The "buddy system" is mandatory when responding to H_2S emergencies or when working in H_2S IDLH conditions. A "buddy system" involves organizing employees into work groups so that each employee in the work group is designated to be observed by at least one other employee in the work group (e.g., be within line-of-sight with each other).

10.7.12 Personnel expected to use a SCBA as part of their normal or emergency duties shall be medically approved before donning the device, per the requirements of GI 150.110.

10.7.13 H_2S Training

A. Training shall be provided to personnel working in areas where there is a potential H_2S exposure. The training shall be provided prior to being approved for work and shall be documented.

B. Training shall include, at a minimum:

- Physical and chemical properties of H_2S.
- Natural and industrial H_2S sources, including decomposition of organic matter (wastewater, sewers), waste streams of industrial operations, crude petroleum and natural gas.
- Signs and symptoms of H_2S exposure, including the physical warning properties of rotten egg odor, burning of eyes, throat irritation, nausea and dizziness.
- Responsibilities of standby personnel, including:
  - Monitoring personnel for potential effects of H_2S exposure.
  - Proper use of H_2S detection equipment.
  - Monitoring strategy (e.g., frequency of atmospheric testing).
  - Securing the work area(s).
  - Monitoring wind direction.
  - Notification of emergency assistance if required.
- PPE, especially respiratory protection:
  - Locations of SCBAs and spare cylinders.
  - Limitations and capabilities of SCBAs and air-line respirators.
  - Demonstrated proficiency in use of a SCBA.
- Emergency response procedures including:
  - Instructions for alerting personnel of an emergency.
  - Notification of emergency response organizations and personnel.
  - Evacuation routes and assembly areas.
  - Detailed site-specific emergency procedures.
- H_2S detection and monitoring methods, with instructions on the types of monitoring equipment available, including:
  - Limitations.
  - Calibrations.
  - Function testing.
  - Use.

C. Refresher training shall be provided at least every two years and be documented.

D. Visitors shall receive a site-specific orientation on local sources of H_2S, health hazards and signs of exposure to H_2S, evacuation routes and emergency assembly areas, applicable alarm signals and how to respond in an emergency.

10.8 Asbestos and Asbestos-Containing Material (ACM)

10.8.1 Work involving asbestos-containing material (ACM) shall be per GI 150.001. Work permit(s) per GI 2.100 shall be obtained for any ACM-related work.

10.8.2 Personnel performing ACM work shall be subject a medical examination per GI 150.001.

10.8.3 The work area shall be clearly defined, roped off and signs posted to warn personnel of the presence of ACM. Signs shall be posted at all approaches to the work area in readily visible locations and shall be in Arabic and English.

10.8.4 Wet methods shall be used for removing or disposing of ACM to prevent the release of asbestos fibers. ACM shall be wetted continuously while removal is in progress. If wet methods cannot be applied, the SA EPD shall be consulted for special procedures for ACM removal. For further information on ACM handling and removal practices, see GI 150.001.

10.8.5 Shearing, punching, sawing or drilling of ACM shall be performed manually. The work surface shall be wetted throughout the operation to minimize ACM dust. Cutting with power-operated tools is prohibited, unless the equipment has high-efficiency particulate air (HEPA) exhaust ventilation.

10.8.6 PPE, including respiratory protection, per GI 150.001 shall be worn wherever ACM-related work is performed, regardless of ventilation, wetting, etc.

10.8.7 Dry sweeping, shoveling or other dry cleanup methods of ACM dust and debris is prohibited.

10.8.8 Eating, drinking and smoking are prohibited in ACM work areas. Personnel shall exit and shower before eating, drinking or smoking after being in an area containing ACM.

10.8.9 At the end of a shift, personnel shall proceed first to a nearby designated area, where contaminated coveralls and equipment shall be removed, collected and disposed of, then proceed to the shower and cleanup area. Selected equipment to be reused shall be collected, cleaned, decontaminated and disinfected prior to reuse.

10.8.10 Contaminated waste, ACM and used disposable clothing shall be transported and disposed of in sealed impermeable bags or containers. Bags and containers shall be marked in both Arabic and English with: “Caution: Health Hazard - Contains Asbestos.” The bags and containers shall be handled and disposed of in accordance with GI 150.001. See Figure 10.3.



Figure 10.3 Asbestos Warning Label

10.9 Naturally Occurring Radioactive Material (NORM)

10.9.1 Work involving NORM-contaminated materials shall be per SAEP-358. Work permit(s) per GI 2.100 shall be obtained for any NORM-related work.

10.9.2 Personnel working with or around NORM-contaminated piping, equipment, materials (e.g., filter cartridges), soil or wastes shall be trained in the hazards of NORM.

10.9.3 Tasks involving NORM-contaminated equipment or materials shall be covered by a job safety analysis (JSA), which shall identify the hazards and associated controls to be used.

10.9.4 Prior to performing an activity involving intrusive operations on any equipment/vessels suspected of having NORM contamination (e.g., cleaning, entering, repairing), a NORM survey shall be performed per SAEP-358.

10.9.5 Based upon the results of the NORM survey, any item or area with detectable levels of NORM contamination shall be subject to contamination control measures and personnel shall follow worker protection requirements per Section 10.9.6 and SAEP-358.

10.9.6 Personnel entering NORM-contaminated pipelines or vessels or conducting intrusive operations on NORM-contaminated equipment shall:

A. Wear appropriate personal protective equipment (PPE), which includes but is not limited to:

- Tyvek coveralls.
- Neoprene, butyl/neoprene or PVC gloves.
- Half-face respirators with HEPA cartridges.
- Quarter-face HEPA disposable respirators.

B. Not eat, drink, smoke or chew gum in areas where potential NORM contamination exists.

C. Thoroughly wash with adequate amounts of soap and water after working with or handling NORM-contaminated equipment or materials, including before eating, drinking or smoking and at the end of the work day.

10.9.7 Work involving any item or area with detectable levels of NORM contamination shall be carried out in a manner that prevents the spread of NORM contamination and minimizes the potential for workers to be exposed to NORM. NORM operations shall only be undertaken in areas that are clearly marked and barricaded, with access restricted to those directly involved in the operations.

10.9.8 Transport of NORM-contaminated equipment or materials shall be per SAEP-358.

10.9.9 Any NORM-contaminated equipment or materials that require release or disposal shall be handled, transported and disposed of in accordance with SAEP-358 and GI 430.001.

10.10 Mercury-Contaminated Material

10.10.1 Equipment, vessels or pipelines in facilities that process hydrocarbons with elevated levels of mercury have the potential to accumulate either free mercury or "black powder" and sludge rich with mercury. Therefore, operations involving crude oil, gas condensate and natural gas (e.g., "black powder" at scraper traps) may contain mercury-contaminated material.

10.10.2 Prior to handling or disposal of "black powder" or sludge, samples shall be analyzed using internationally accepted methods, such as the toxicity characteristic leaching procedure (TCLP) for heavy metals in sludge/solid hazardous wastes.

10.10.3 The SAPO shall notify the SA EPD two weeks prior to working on any equipment that is potentially contaminated with mercury.

10.10.4 SA EPD shall be provided with an up-to-date list of all personnel involved in work with equipment that is potentially contaminated with mercury.

10.10.5 Work permit(s) per GI 2.100 shall be obtained for any mercury-related work. Entry into any vessels or pipelines that potentially contain mercury-contaminated material shall be in accordance with Chapter I-6, *Confined Spaces*, of this manual.

10.10.6 Personnel entering mercury-contaminated vessels or pipelines, conducting intrusive work on mercury-contaminated equipment or conducting activities that may release mercury into the ambient air (e.g., welding of contaminated piping) shall be trained in the hazards associated with mercury.

10.10.7 The work area shall be barricaded with posted warning signs that clearly warn personnel of mercury hazards. Warning signs shall be in both Arabic and English. The warning sign shall read:

WARNING
MERCURY HEALTH HAZARD
AUTHORIZED PERSONNEL ONLY

10.10.8 Tasks involving mercury-contaminated equipment or materials shall be covered by a job safety analysis (JSA) which shall identify the hazards and associated controls to be used.

10.10.9 All personnel in the immediate area shall be notified before work begins. Nonessential personnel shall be kept upwind or crosswind from the work site location.

10.10.10 Exposures to levels exceeding the American Conference of Governmental Industrial Hygienists (ACGIH) mercury TLV of 0.025 mg/m^3 shall not be permitted without proper PPE, including respiratory protection. It is important to note that the TLV has a skin notation indicating that mercury can be readily absorbed through the skin.

10.10.11 Mercury-contaminated equipment, vessels or pipelines shall be continuously mechanically ventilated during confined space entry operations. The exhaust of the air blower shall be located downwind. Ventilation must be sufficient to ensure that mercury vapor does not exceed the mercury TLV.

10.10.12 Measurements of mercury vapor shall be conducted at representative locations inside equipment, vessels and pipelines throughout the work. Samples shall be collected by SA EPD Industrial Hygienists. Results of the air testing shall be used to determine changes in the level of required PPE, including respiratory protection.

10.10.13 Personnel entering equipment, vessels or pipelines shall wear air-supplied respirators or SCBAs, unless otherwise instructed by the SA EPD. See Chapter I-3, *Personal Protective Equipment*, for information regarding respiratory protection equipment.

10.10.14 Personnel working with mercury-contaminated equipment or materials shall wear appropriate PPE, which shall include, but not be limited to:

A. Disposable DuPont™ Tychem® SL coveralls or equivalent, following prior approval from the SA EPD. Coveralls shall be fitted with elastic hoods. Street clothing and/or work overalls shall not be worn under disposable coveralls.

B. Neoprene or butyl/neoprene gloves.

C. Chemical resistant overboots.

10.10.15 Decisions on downgrading/upgrading any level of PPE rests with SA EPD and shall be based, as a minimum, on current work activities, airborne levels of mercury contamination detected and visual determination of mercury contamination. Any proposed changes to the required level of PPE used by personnel shall be approved in writing by the SA EPD.

10.10.16 Personal ("street") clothing shall never be worn inside mercury-contaminated equipment or pipelines, including under coveralls.

10.10.17 A personal decontamination station consisting of a clean change room, a contaminated room and a cleanup room shall be provided for workers, as follows:

A. The clean change room shall be equipped with personal lockers for the storage of personal ("street") clothing and personal belongings (NOTE: jewelry, particularly gold, is strictly prohibited inside any mercury-contaminated area).

B. The contaminated room shall be equipped with sealable receptacles (e.g., plastic drums) for disposal of coveralls, spent respirator filters, gloves, overboots, etc. At the end of each shift, workers shall proceed to the contaminated room where contaminated coveralls and equipment shall be removed, collected and disposed of.

C. Selected equipment slated for reuse (e.g., respirators) shall be collected in a separate container and cleaned, decontaminated and disinfected as necessary prior to reuse.

D. The cleanup room shall be equipped with hand wash station(s), liquid soap and disposable towels. Prior to proceeding to the clean room and changing to personal clothing, workers shall thoroughly wash hands, face and any other body parts that may have been accidentally exposed during work activities.

10.10.18 Any mercury-contaminated equipment or materials that require release or disposal shall be handled, transported and disposed of in accordance with GI 430.001.

11. Hand Tools and Power Tools

11.1 Purpose

This chapter describes minimum safety requirements for selection, use and care of hand tools and power tools, both portable and fixed.

11.2 References

Saudi Aramco (SA) General Instructions (GIs)

GI 2.100, *Work Permit System*

GI 8.002, *Safety Spectacles*

GI 8.005, *Protective (Safety) Footwear*

U.S. Code of Federal Regulations (CFR):

29 CFR 1910, Subpart O, *Machinery and Machine Guarding*

29 CFR 1910, Subpart P, *Hand and Portable Powered Tools and Other Hand-Held Equipment*

29 CFR 1926, Subpart I, *Tools - Hand and Power*

American National Standards Institute (ANSI):

ANSI/ASSE A10.3, *Safety Requirements for Powder-Actuated Fastening Systems*

ANSI B7.1, *Safety Code for the Use, Care, and Protection of Abrasive Wheels*

National Fire Protection Association (NFPA):

NFPA 70, *National Electrical Code* (NEC)

11.3 General Requirements

11.3.1 Required work permits when using hand tools and power tools shall be obtained in accordance with GI 2.100.

11.3.2 Appropriate personal protective equipment (PPE) shall be worn at all times when using hand tools and power tools (e.g., hard hat, safety glasses/ goggles, hearing protection, safety shoes, gloves, face shield, finger/hand protector). See Chapter I-3, *Personal Protective Equipment (PPE)*, of this manual.

Saudi Aramco: Company General Use

11.3.3 Personnel shall not operate any tools unless they are appropriately trained in their selection, use, inspection and storage. Training records shall be made available upon request.

11.3.4 Tools constructed of good quality materials shall be used. Use of "homemade" tools is prohibited.

11.3.5 Tools shall be kept clean at all times.

11.3.6 Tools shall be inspected before and after use, as well as before storage.

11.3.7 Excessively worn, defective or deformed tools shall not be used. If excessive wear, defect or damage is observed, the tool shall be immediately tagged and withdrawn from use for repair or disposal.

11.3.8 Proper racks and boxes shall be provided and used for storage of tools.

11.3.9 The correct type, size and weight of tool shall be used for each task.

11.3.10 Only properly insulated or nonconductive tools shall be used when work is performed on or near electrical equipment. Insulation integrity shall be regularly inspected by an authorized/certified electrician. See Chapter III-3, *Electrical Equipment*.

11.3.11 A record of tools issued, repaired or withdrawn from use shall be maintained.

11.4 Requirements for Specific Types of Hand Tools

11.4.1 Screwdrivers

A. Tips shall be the correct size to fit the slot of the screw.

B. Pliers or other tools shall not be used to obtain additional leverage on the screwdriver's shank.

C. Handles shall not be subjected to blows from hammers or similar instruments.

D. Handles shall be insulated when used for electrical work.

11.4.2 Pliers

A. Pliers shall not be used as wrenches.

B. Pliers shall have insulated handles when used for electrical work.

C. Pliers shall be kept free from dirt and grit.

Saudi Aramco: Company General Use

11.4.3 Hammers

A. The correct type and size shall be used for the task.

B. Handles shall be made from smooth timber, bonded fiberglass or be made of an integral head and shaft of steel.

C. Proper wedges shall be used to secure heads to wooden handles.

11.4.4 Chisels

A. Cutting edges shall be kept sharp at all times, and the original shape and angle shall be maintained.

B. Mushroomed heads shall be ground with a slight taper around the edge to prevent chipping and reduce the tendency to mushroom again.

C. Tools made of brass or aluminum, such as hammers and chisels, shall only be ground using silicon carbide grinding wheels.

11.4.5 Hacksaws

A. Blades shall be suitable for the material to be cut.

B. Sufficient tension shall be applied to maintain a rigid blade.

C. Hacksaw blade teeth shall be pointed in the forward direction (away from the user's body).

11.4.6 Hand Saws

A. The teeth shall be kept sharp and clean. Blades shall be lightly oiled or greased when not in use to prevent corrosion (e.g., while in storage).

B. Blades shall be protected by a slotted piece of timber or a sheath when not in use.

C. Cracked, defective or damaged saws shall not be used.

11.4.7 Spanners and Wrenches

A. The correct size spanner or wrench shall be used.

B. When possible, use a box-end or open-end wrench rather than an adjustable wrench.

C. The use of "cheater bar" extensions is prohibited.

Saudi Aramco: Company General Use

D. Only wrenches specifically designed to be struck by hammers shall be used for that purpose.

E. Properly designed hammer/slugging wrenches shall be used for heavy work.

11.4.8 Pipe Wrenches

A. Pipe wrenches shall be large enough for the work to be performed. Jaw teeth shall be kept clean and sharp, and the knurl, pin, spring, etc., kept free from damage.

B. The use of "cheater bar" extensions is prohibited.

C. Pipe wrenches shall not be struck with a hammer or used as a hammer.

11.4.9 Hand Excavation Tools

A. Hand excavation tools (e.g., picks and shovels) shall be maintained in good condition at all times.

B. Blades shall not be blunt, turned, split or jagged.

C. Pick and shovel shafts shall be free of cracks, splinters and other defects or damage.

D. Pick shafts shall be firmly attached to the head.

11.4.10 Hydraulic Jacks

A. Jacks shall be clearly marked with their rated load capacity. The rated load capacity shall be legibly and permanently marked in a prominent location on the jack by casting, stamping or other suitable means.

B. The load to be lifted shall be less than the jack's rated load capacity.

C. Jacks shall be placed on a level, solid support with the load centered.

D. Once raised, the load shall be immediately and properly blocked/secured.

E. Jacks shall not be used when there is evidence of a hydraulic oil leak.

F. The jack release mechanism shall be clearly marked and shall not be located where it can be accidentally operated.

G. Jacks shall be properly lubricated at regular intervals.

Saudi Aramco: Company General Use

H. Jacks shall be thoroughly inspected at least every 6 months. Jacks shall be visually inspected when issued and when returned to the tool room/crib.

I. A jack subjected to abnormal load or shock shall be immediately inspected

J. Damaged/defective jacks shall be immediately removed from service.

11.5 Portable Power Tools – General Requirements

11.5.1 Portable power tools shall be equipped with properly functioning constant pressure switches or controls that will shut off the power when the pressure is released (i.e., a "dead man" switch).

11.5.2 Power tools shall not be equipped with trigger locks.

11.5.3 Protective shields/guards supplied with the tools (per design) shall not be removed.

11.5.4 The operating control on hand-held power tools shall be located to minimize the possibility of inadvertent operation.

11.5.5 Before they are set down, rotating portable power tools shall be switched off and held until the rotation has completely stopped. They shall not be stopped by grasping the rotating assembly.

11.5.6 Power tools shall be disconnected from the power source before changing bits, blades, cutters or wheels.

11.5.7 Portable power tools shall be stored in clean and dry conditions.

11.5.8 Portable power tools shall not be left lying around the work area where they could be damaged.

11.5.9 Cords, cables, etc., shall be positioned where they are not likely to be damaged (e.g., run overhead) or shall be otherwise protected from damage (e.g., running them inside impact resistant conduit or using abrasion resistant supply leads).

11.5.10 Use of the electrical cord for hoisting or lowering power tools is prohibited.

11.6 Portable Pneumatic Power Tools

11.6.1 Portable air compressors shall be per Chapter III-2, *Mechanical and Heavy Equipment*.

Saudi Aramco: Company General Use

11.6.2 Compressed air hoses shall be the correct size and rating for the tool being used.

11.6.3 Compressed air hose joints (twist lock fittings) shall be secured with proper couplers and safety wires/pins and/or whip checks to prevent the tool and hose couplings from being inadvertently disconnected.

11.6.4 Crimped, clamped or banded connections (see photo) shall be used to secure compressed air hoses to fittings/couplers.



11.6.5 Screw-type ("Jubilee") hose clamps (see photo) shall not be used to secure compressed air hoses to fittings/couplers.

11.6.6 Hose lengths shall be kept as short as possible and placed so they are not subject to damage (e.g., not crossing active roadways or walkways).



11.6.7 Compressed air used for cleaning formwork, etc., shall be less than 30 psig.

11.6.8 Compressed air systems operating at or above 30 psig nozzle pressure shall have a relief device and/or air ports (see Figure 11.1) installed on the nozzle that limit the nozzle pressure to less than 30 psig if the air system becomes dead ended (e.g., inadvertently pressed against an object or person).



Figure 11.1 Air Nozzle with Relief Air Ports

11.6.9 Compressed air shall not be used to remove dust or dirt from clothing or individuals. Compressed air hoses shall not be directed towards an individual for any reason.

11.6.10 Abrasive blasting shall be per Chapter II-8, *Abrasive Blasting*.

Saudi Aramco: Company General Use

11.6.11 Jackhammers (Pneumatic Drills)

A. Tool bits for jackhammers or concrete breakers shall be securely positioned to prevent the bit from being ejected during operation. The bit shall be kept sharp.

B. Ear, eye, hand (thick gloves to minimize vibration) and foot protection (e.g., safety shoes with metatarsal guards) shall be worn by all personnel working with or near jackhammers and concrete breakers. See Chapter I-3, *Personal Protective Equipment (PPE)*.

11.7 Portable Electric Power Tools and Extension Cords

11.7.1 Portable electric power tools shall be rated for use at a voltage not exceeding 240 V.

11.7.2 Power sources and portable electric power tools shall be of a single voltage (110 V or 220 V nominal) within a single job site or operating area. Portable electric power tools shall match the supplied power source voltage.

11.7.3 Portable electric power tools shall be certified by an independent testing and certification service per the list of recognized testing laboratories. See Table 1 for examples of testing laboratories.

* Note: CE marking is not equivalent to an independent certification by a recognized body. CE marking (Conformite Europeene) indicates only the manufacturer's declaration of conforming to the legal requirements to achieve CE marking.

11.7.4 Portable electric power tools shall not be altered from their original manufactured state. Power tools are certified by an independent testing and certification service as a complete unit; alteration is prohibited.

11.7.5 Portable electric power tools shall be double insulated or properly grounded with a manufacturer installed three-prong plug.

Saudi Aramco: Company General Use

Table 1: List of Recognized Testing Laboratories

Bay Area Compliance Laboratories	**Bureau Veritas Consumer Products Services, Inc. (BVCPS)**	**CSA Group Testing and Certification Inc.**
DEKRA Certification, Inc. (Formerly KEMA KEUR)	**Eurofins Electrical and Electronic Testing NA, Inc.**	**Factory Mutual (FM) Laboratories**
Intertek Testing Services NA, Inc. (ITSNA)	**LabTest Certification Inc.**	**Nemko North America, Inc. (NNA)/ Nemko N-mark**
NSF International (NSF)	**QAI Laboratories, LTD (QAI)**	**QPS Evaluation Services Inc.**
SGS North America, Inc.	**SolarPTL, LLC**	**TUV SUD/ TUV Rheinland**
UL LLC (Formerly Underwriters Laboratories)	**German GS Mark & DIN Mark – German Equipment and Product Safety Act**	**German VDE Mark**
ENEC (Europe) – European Norms Electrical certification	**BSI Kitemark (UK)**	**Regulatory Compliance Mark (Australia) - Electrical Equipment Safety System**

Saudi Aramco: Company General Use

11.7.6 Plug adaptors are prohibited. Portable electric power tool plugs shall match the power source outlet.

11.7.7 Portable electric power tools and extension cords shall be protected by an overcurrent protection device (e.g., panel mounted circuit breaker or in-line fuse).

11.7.8 Residual current devices (RCDs), including ground fault circuit breakers (GFCIs) and earth leak current breakers (ELCBs), shall be used for all 110/220 V portable electric power tools.

11.7.9 RCDs shall have a maximum rated tripping current of 10 mA.

11.7.10 RCDs should be installed as close to the power source as practicable (e.g., at distribution board/panel).

11.7.11 RCDs shall be installed in enclosures to protect against environmental conditions and designed for use in outdoor environments. RCDs shall be protected against mechanical damage and vibration.

11.7.12 Users of portable electric power tools shall visually inspect and check the function of the RCD by operating the "test" button daily.

11.7.13 RCDs shall be tested every three months by a competent person using appropriate electrical test equipment (i.e., an RCD tester that simulates a ground/earth fault current to trip the device under test).

11.7.14 Any portable electric power tool or extension cord used in a SA restricted area requires a hot work permit per GI 2.100.

11.7.15 Electrical extension cords shall:

A. Be as short as possible.

B. Have appropriate grounding pins and blades to fit the socket outlet.

C. Be of three-wire conductor type.

D. Be #12 gauge (AWG) minimum if less than 30 m (100 ft) long and #10 gauge minimum if 30 m (100 ft) long or longer.

E. Be rated for outdoor use (i.e., have a "W" designation for the insulation/jacket).

F. Repaired by a certified electrician and be spliced so that the splice retains the insulation, outer sheath properties and usage characteristics of the cord being spliced (e.g., use a manufactured splice kit).

Saudi Aramco: Company General Use

F. Not be connected together in sequence (i.e., connected in a daisy-chain layout).

G. Not be used for permanent wiring.

H. Be certified by an independent testing and certification service such as UL, FM or KEMA-KEUR (or equivalent as specified in writing by the SA Loss Prevention) and shall bear the appropriate certifying agency mark.

11.7.16 Job-made extension cords shall be fabricated by a certified electrician and shall meet the requirements in Sections 11.7.15(A) through 11.7.15(H). In addition, flexible cables used to make job made extension cords shall be rated for junior hard or hard service usage per NFPA 70 (Article 400) and shall be indelibly marked as such approximately every 0.3 m (1 ft) along the length of the cord (e.g., marked SJ, SJO, SJT, SJTO for junior hard service or S, ST, SO, STO for hard service). Job-made extension cords shall be fitted with receptacle boxes and plugs labeled as meeting "NEMA Type 4," "NEMA Type 4X," "IEC IP 55" or higher.

11.7.17 Portable lights shall:

A. Be equipped with insulated handles, have substantial guards attached to the handle or holder, and not have paper-lined metal shell/guard if the light is powered by alternating current (AC).

B. Be certified by an independent testing and certification service such as UL, FM or KEMA-KEUR (or equivalent as specified in writing by the SA Loss Prevention) and shall bear the appropriate certifying agency mark.

C. Be properly grounded with a manufacturer installed three-prong electrical plug is the light is powered by AC.

D. Not be used in a SA restricted area without a hot work permit per GI 2.100, except explosion-proof flashlights.

E. Be repaired or replaced if defective.

F. Be inspected prior to issuing/using. Frequent random on-site checks shall be performed.

G. Not be placed where heat generated by the light could ignite combustible materials (e.g., scaffold planks).

11.7.18 Flashlights ("torches") shall be explosion-proof (e.g., labeled "Ex" or "UL 844") if used within a SA electrically classified area.

Saudi Aramco: Company General Use

11.7.19 Portable Drills

A. Large holes shall be drilled in stages with step drills or by using smaller bore drill bits and gradually increasing the drill bit size.

B. Drills shall not be equipped with a trigger lock.

C. Drill bits shall be kept sharp and clean.

11.7.20 Portable Saws

A. Hand-operated circular saws (e.g., Skilsaws) shall be fitted with a retractable spring-loaded guard that allows only the working part of the blade to be exposed. See Figure 11.2.

B. Portable table saws shall be provided with adjustable guards, anti-kickback devices, push-type start/stop buttons within easy reach of the operator, and be secured against movement. See Figures 11.3 and 11.4.

C. Portable power driven circular saws having a blade diameter greater than 50 mm (2 inches) shall be equipped with guards above and below the base plate or shoe.

D. Portable saws shall be unplugged from their power source for repair, maintenance and when not in use.

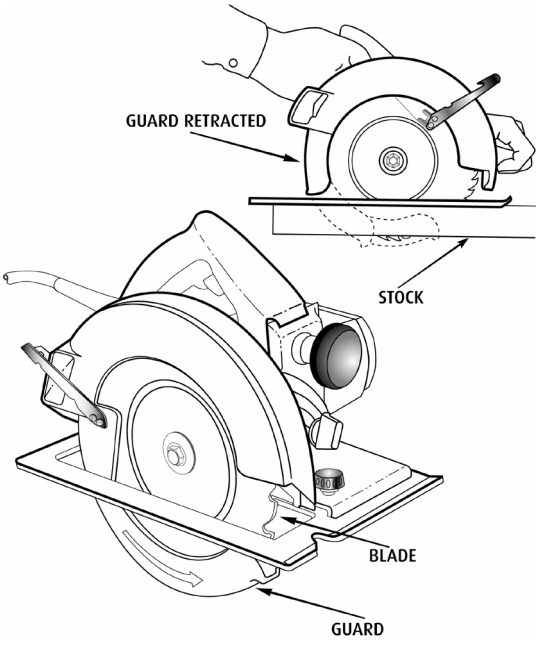

Figure 11.2 Retractable Saw Guard

Saudi Aramco: Company General Use



Source: U.S. Occupational Safety and Health Administration

Figure 11.3 Portable Table Saw

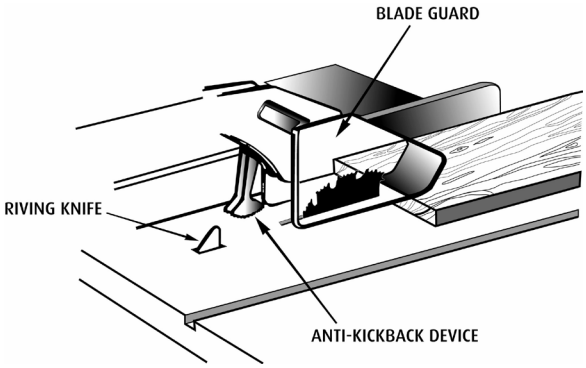

Figure 11.4 Table Saw Blade Guard

11.7.21 Masonry Saws

A. Masonry saws shall be guarded by a semicircular enclosure over the blade. The maximum angular exposure of the blade periphery shall not exceed 180 degrees. The guard design shall be able to retain fragments of the blade in case it shatters while in use.

B. Blade speed shall be maintained in accordance with the manufacturer's specifications.

Saudi Aramco: Company General Use

C. Dry-cutting masonry saws shall be equipped with dust collectors. Operators of such saws and other persons in the area shall be provided with approved dust respirators.

D. Masonry saw operators shall wear proper hearing protection, safety glasses/goggles and a face shield. See Chapter I-3, *Personal Protective Equipment (PPE)*.

E. Masonry saws shall be inspected by a qualified person at regular intervals and be maintained in a safe operating condition.

11.8 Grinding Tools – General Requirements

11.8.1 Grinding wheels shall be free of defects. They shall be checked for defects before mounting and defective wheels shall be discarded or destroyed.

11.8.2 Grinding wheels shall be balanced and centered and shall be installed per the wheel manufacturer's instructions.

11.8.3 Grinding tools shall be inspected prior to use and shall be replaced immediately if found to be defective. Electrical wiring and other associated parts shall also be inspected.

11.8.4 Grinding tools shall not be used on soft metals (e.g., aluminum, brass, copper, lead, zinc) unless the grinding wheel is specifically designed for such metals.

11.8.5 Grinding tools shall not be used unless the maximum permissible speed is clearly marked on the wheel and case. See Figure 11.5.

11.8.6 The running speed shall not exceed the maximum permissible speed displayed on the grinding wheel.

Saudi Aramco: Company General Use

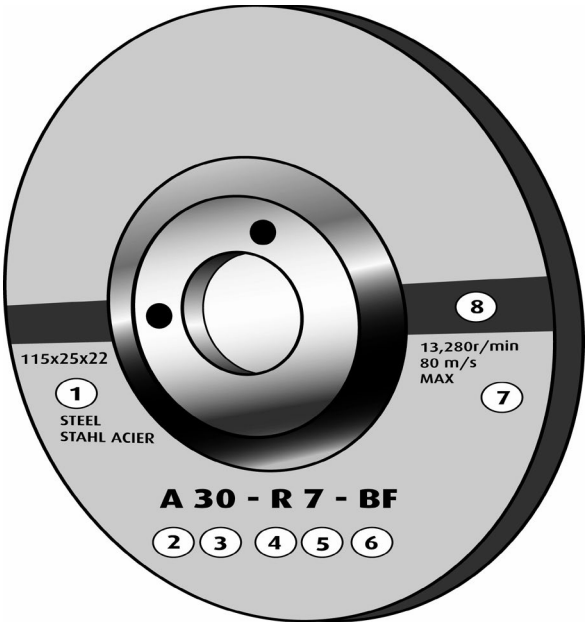

1. Dimensions	5. Structure
2. Nature of the Abrasive	6. Bond Type
3. Abrasive Grain Size	7. Maximum Speed
4. Grain Grade (Hardness)	8. Color Stripe = Speed

Figure 11.5 Abrasive/Grinding Wheel Markings

11.8.7 Safety guards provided the manufacturer for grinding wheels shall be used and maintained at all times. Guards shall allow only the working part of the wheel to be exposed. The guard shall also cover the spindle end, nut and flange projections. The maximum angular exposure of the grinding wheel perimeter and sides shall not exceed 180 degrees.

11.8.8 Safety guards shall be mounted to maintain proper alignment with the wheel. The guard and fastenings shall be strong enough to retain fragments of the wheel in case of accidental breakage.

11.8.9 Portable grinders may only be used without safety guards when the work location makes it impossible to use a grinder equipped with a safety guard (e.g., internal grinding inside a small diameter pipe). In this case, the employee's supervisor shall approve such use, the second handle shall be on the grinder and used, and the guard shall be immediately replaced afterwards.

Saudi Aramco: Company General Use

11.8.10 Users of portable grinders shall wear combined head, eye, and face protection devices at a minimum, to protect them against flying particles. In areas where hard hats are required, face shields shall be securely attached to a compatible type of hard hat in compliance with CSM I-3, Personal Protective Equipment (PPE), section 3.4.5. Face shields shall meet the requirements of CSM I-3, Personal Protective Equipment (PPE). See Figures 11.6 and 11.7.



Figure 11.6 Typical Face Shield Providing Combined Head, Eye and Face Protection in Areas where Hard Hats are not Required



Figure 11.7 Typical Face Shield Attached to a Compatible Type of Hard Hat

11.9 Fixed Electric Tools

11.9.1 Fixed or permanently mounted electric tools shall be hardwired to the power supply and may be powered by a 220 volt electrical supply if a 110 volt tool is not available.

11.9.2 Fixed Grinding Equipment

A. Floor and bench-mounted abrasive wheels shall be provided with safety guards (e.g., protection hoods). Safety guards shall be capable of withstanding the effect of a bursting wheel.

B. Grinding wheels shall be balanced and centered and shall be installed per the wheel manufacturer's instructions.

C. The maximum angular exposure of the grinding wheel periphery and sides shall not be more than 90 degrees, except when work requires contact with the wheel below the horizontal plane of the spindle, and then the angular exposure shall not exceed 125 degrees. In either case, the exposure shall not exceed 65 degrees above the horizontal plane of the spindle. See Figure 11.8.

D. Floor and bench-mounted grinders shall be provided with work rests that are rigidly supported and adjustable. See Figures 11.8 and 11.9. Work rests shall not exceed 3 mm (1/8 inch) from the surface of the wheel.

Saudi Aramco: Company General Use

E. Tongue guards shall be kept adjusted to the wheel with a maximum gap of 6 mm (1/4 inch) from the surface of the wheel. See Figure 11.8.

F. Abrasive grinding wheels for fixed grinders shall be inspected and ring-tested before mounting. See Figure 11.10.

G. Grinding wheels shall not be forced on the spindle. They shall slide on easily. The spindle nut shall not be over tightened. See Figure 11.11.

H. Materials shall not be forced or jammed into the grinding wheel.

I. The sides of the abrasive wheel shall not be used as a grinding surface.

J. A grooved or damaged grinding wheel shall be immediately dressed or replaced.

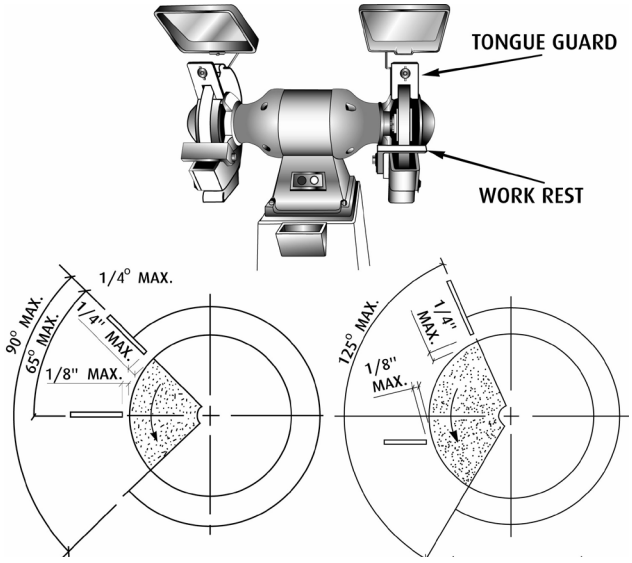

Figure 11.8 Grinder Guards

Saudi Aramco: Company General Use

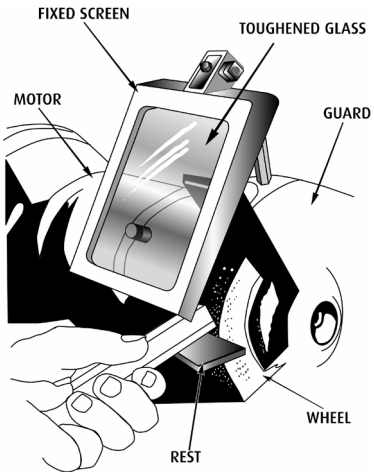

Figure 11.9 Bench Grinder Guard

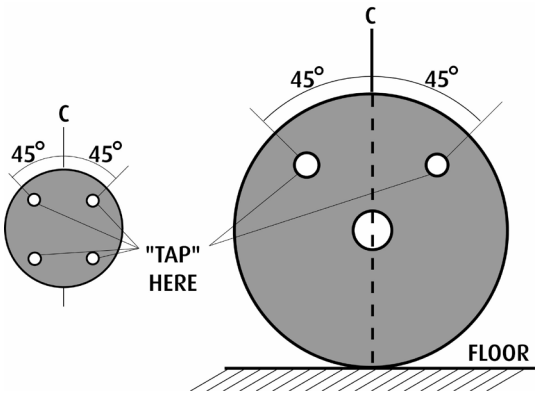

Figure 11.10 Ring Test

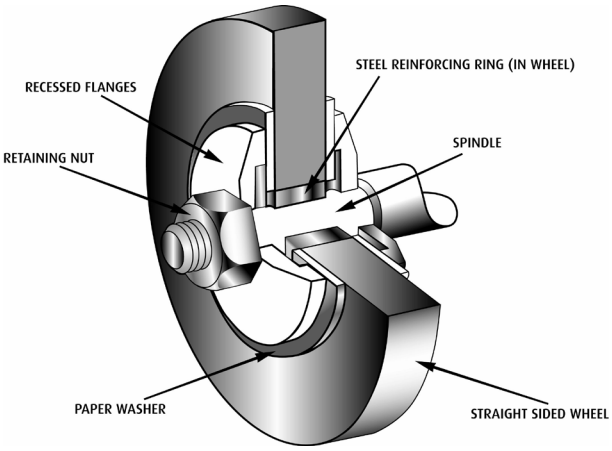

Figure 11.11 Correctly Mounted Grinding Wheel

Saudi Aramco: Company General Use

11.9.3 Fixed Table Saws

A. Fixed table saws shall be permanently wired to an emergency electrical disconnect switch that has the capability of being locked. The start/stop buttons shall be at the operator's location.

B. Table saws shall have blade guards that cover the saw at all times. See Figure 11.4.

C. Table saws used for ripping shall have anti-kickback devices and riving knife (kerf spreader).

D. Exposed parts of the saw located underneath the table shall be guarded.

E. Table saws shall be secured in place.

F. Table saw riving knives shall be kept clean and properly adjusted to the work at all times.

G. Sufficient working space shall be provided around the saw.

H. "Push sticks" shall be available and used during the last 30 cm (12 inches) of any cut.

I. The work area shall be kept clean, including preventing excessive buildup of sawdust and scrap wood.

11.9.4 Radial saws shall be provided with:

A. An upper hood to enclose the top portion of the blade down to a point that includes the end of the saw arbor, with the sides of the lower, exposed portion of the blade guarded to the full diameter of the blade by a device that automatically adjusts to the thickness of the stock being cut.

B. Anti-kickback devices shall be on both sides of the saw and shall be designed to provide adequate holding power for all thicknesses of material being cut.

C. An adjustable stop limiting the forward travel of the blade beyond the distance necessary to complete the cut in repetitive operations.

D. A saw housing that automatically returns to the starting position.

E. A hood marked to show the direction of the saw rotation.

F. A permanent label affixed to the rear of the guard, stating: "DANGER. DO NOT RIP FROM THIS END."

Saudi Aramco: Company General Use

G. Rigid, secure mounting.

H. Start/stop buttons at the operator's position.

I. Permanent wiring to an emergency electrical disconnect switch that is capable of being locked.

11.9.5 Chop saws/power miter saws shall be provided with:

A. A spring-loaded upper hood that encloses the entire blade when it is in the up position.

B. A locking clamp to secure the work piece from moving.

C. A spring-loaded, finger-operated start button that automatically stops the saw when the trigger is released.

11.10 Powder Actuated Fastening Tools

11.10.1 Use of powder actuated fastening tools (cartridge operated tools) shall be in accordance with ANSI A10.3 and the tool manufacturer's instructions.

11.10.2 The correct size (caliber) and strength of cartridge required for the tool, the fixing and the material to be fixed onto shall be properly determined and used.

11.10.3 The following precautions shall be followed when using powder actuated fastening tools:

A. When the tool is removed from the carrying case, it shall be checked to ensure that a cartridge is NOT LOADED.

B. Tools that are not in proper working condition shall be immediately removed from service and not used until properly repaired.

C. Tools shall not be loaded with a cartridge until just prior to the intended firing. The following safety precautions shall apply when loading a cartridge:

- The operator shall point the tool away from himself and other personnel.
- The tool shall only be loaded in the area where work is to be performed.
- The tool shall never be left loaded when not in use. Loaded tools shall not be left unattended.

D. Tools shall be checked to ensure they are NOT LOADED with a cartridge before repair/maintenance/storage.

Saudi Aramco: Company General Use

E. The tool barrel shall be pressed hard against the fixing surface during use.

F. Tools shall be used with the correct shield, guard or attachment as recommended by the manufacturer.

G. Fasteners shall not be driven into very hard or brittle materials including, but not limited to, cast iron, glazed tile, surface-hardened steel, glass blocks, hollow tile, terra cotta, marble, granite, slate.

H. Driving into soft materials shall be avoided, unless materials are backed by another material that will prevent the fastener from passing completely through. Careful inspection of all materials shall be performed before using the cartridge tool.

I. Fasteners shall not be driven into a spalled area caused by an unsatisfactory shot or into any existing hole in the material. The new fixing shall be at least 50 mm (2 inches) away from any previous hole or any welded joint.

J. Fasteners shall not be fired into corner bricks or mortar joints. Pins shall be at least 100 mm (4 inches) away from the edge of concrete or brick work and 12 mm (½ inch) from the edge of steel.

K. Tools shall be held at a right angle (perpendicular) to the job when firing.

L. Tools shall be retriggered without moving the tool from the work face in the event of a misfire. If the shot fails again, the tool shall be held firmly in the firing position for at least 30 seconds in case of a possible "hang fire" in the cartridge. The misfired cartridge shall be removed per the manufacturer's instructions. Nails, knives, etc., shall not be used to pry the cartridge loose.

M. Tools shall be cleaned and completely assembled after use. Cartridges shall be placed in their correct color-coded box before being returned to the storage area.

N. Personnel shall not operate, clean, maintain or repair any cartridge tool without possessing a certificate of competency, issued by an accredited tool vendor or manufacturer's representative. Certificates shall identify the particular model that personnel are qualified to handle.

11.10.4 Storage

A. Storage of tools and cartridges shall be in a fireproof, dry, lockable, easily accessible and secure location.

Saudi Aramco: Company General Use

B. Tools and cartridges shall not be stored together. Storage providing positive physical separation of tools and cartridges (e.g., a wall) shall be used.

C. Warning signs shall be posted where cartridges are stored: "DANGER - NO SMOKING - CARTRIDGE STORAGE."

D. Tool and cartridge storage areas shall be ventilated. Cartons of cartridges shall not be stacked against a wall. Ventilation spaces shall be left around the cartons.

E. Only one carton of each power-level cartridge shall be open at a time. All empty cartons and intermediate packing shall be discarded immediately.

F. Tools shall be stored in their carrying cases. No loose cartridges shall be in the carrying case; all cartridges shall be in their color-coded boxes.

G. Only authorized personnel shall be allowed access to the storage area.

H. Storemen shall be trained and certified if they are required to clean and maintain powder actuated fastening tools. Training documentation shall be maintained in the personnel files.

11.10.5 Issue and Returns

A. A system for issuing and returning powder actuated fastening tools and cartridges, with signatures, shall be used. A usage log of tools by serial number shall be maintained.

B. Tools or cartridges shall only be withdrawn from the storage area by authorized personnel possessing a valid user certificate.

C. Only the minimum number of cartridges required for that particular shift's operation shall be issued.

D. Powder actuated fastening tools and cartridges shall not be left at the job site during a lunch break or at the end of a shift, but shall be returned to the storage area for safekeeping.

E. Loss of a powder actuated fastening tool and/or cartridges shall be immediately reported to the SA proponent organization.

Saudi Aramco: Company General Use

12. Materials Handling

12.1 Purpose

This chapter describes minimum requirements for the movement, storage and handling of materials used in Saudi Aramco (SA) facilities and construction sites.

12.2 References

SA General Instructions (GIs):

GI 1010.007, *Safe Practices for Towing Equipment and Trailers*

GI 1183.005, *Procedure for Requesting Cargo Hauling, SAP Transaction ZTCV431A, Truck Request*

SA Engineering Procedures (SAEPs):

SAEP 35, *Valves Handling, Hauling, Receipt Tests and Storage*

SAEP 361, *Storage, Handling and Installation of Weight-Coated Pipe*

SA Safety Handbook, *Minimum Safety Rules*

12.3 Planning

12.3.1 Selection of a storage area for materials shall be made with due consideration for drainage and protection from rain and sandstorms.

12.3.2 No material or equipment shall be stored under energized electrical buses or power lines, or near energized equipment.

12.3.3 Storage areas shall be planned to minimize the reversing and maneuvering of vehicles, especially into and out of congested/tight areas.

12.3.4 Access ways shall be wide enough to allow passage of emergency response equipment.

12.3.5 Adequate firefighting equipment shall be readily available and accessible in storage areas. See Chapter I-7, *Fire Prevention*, of this manual for further requirements concerning storage areas.

12.3.6 Cribbing timber, racks or pallets shall be used to ensure that materials are stored off the ground.

12.3.7 Protection shall be provided for materials that could be damaged by moisture, such as cement, insulation and other bulk material.

12.3.8 All machinery, equipment and valves shall be maintained fully assembled and securely closed. All machined surfaces shall be covered and fully protected from exposure to the weather.

12.3.9 The quantity of material on-site at any one time shall be restricted to a minimum stock. Flammable stores shall be kept separated.

12.3.10 When necessary, appoint a materials controller who is responsible for materials during planning, unloading, storage and final distribution.

12.4 Machine Transport

12.4.1 Truck Request

Requests of a vehicle for the movement of general cargo, liquids, explosives and special equipment moves shall comply with GI 1183.005.

12.4.2 Dumpers

A. Dumper drivers shall be properly trained and experienced and shall hold a current Saudi Arabian Government license.

B. Passengers shall not be allowed to travel in the skip or anywhere else on the dumper.

C. Dumpers shall be regularly maintained with particular attention to brakes, steering and the skip release mechanism. If they are to be used for towing, a proper towing eye with a shackle or pin shall be provided.

12.4.3 Tractors and Trailers

A. The methods, procedures and responsibilities for towing equipment and trailers shall comply with GI 1010.007.

B. Safety chains or wire ropes shall be attached between the towing vehicle and trailer to allow the towing vehicle to bring the trailer to a controlled stop if the towing connection breaks or becomes separated. Tractor trailers using a fifth wheel connection do not require such safety chains or wire ropes.

C. The trailer and its load shall not exceed the rated capacity of the trailer or the towing capacity of the tow vehicle. The trailer shall be fitted with an independent braking system if it is designed to carry more than 9,100 kg (20,000 lb).

D. Pipe-carrying trailers shall be fitted with side stops. Trucks transporting pipes shall be fitted with a metal partition/barrier on the front end of the trailer or truck/tractor to prevent the material being transported from striking the cab in case of a sudden stop or travel down a steep grade.

E. Loads shall be securely tied down before being moved. The load shall be covered if it includes loose material (e.g., dirt, sand, gravel).

F. Warning placards, such as "Wide Load", shall be properly affixed when a wide (or large) load is being transported.

G. Applicable road permits shall be obtained prior to transportation of wide, over-height or over-weight loads. The transportation of such loads shall comply with applicable Saudi Arab Government laws and SA requirements (e.g., movement may be restricted due to heavy traffic or prohibited from traveling during night time). The route shall be preplanned to check for adequate clearances, weight restrictions, etc. An escort vehicle is required when transporting wide, over-height or over-weight loads within a SA facility.

H. If any part of the load extends from the trailer (at either side or end), the edges shall be clearly marked with red and white warning tape. For piping, a red flag/cloth or flashing light shall be affixed at the end of the pipe.

12.4.4 Conveyor Belts and Monorails

A. All pulleys, rollers, gears and pinch points shall be guarded.

B. Conveyor systems shall be equipped with audible warning signals to sound immediately before the conveyor starts.

C. On/off switches shall be clearly marked and readily accessible at the operator's station. Emergency stop pull cords shall be provided along both sides of a belt conveyor system.

D. Emergency stop switches shall be configured so the conveyor cannot be started again until the actuating stop switch has been reset to the running or "on" position.

E. Loose clothing, long hair, etc., shall not be allowed when working on or near conveyor systems.

12.5 Site Storage

12.5.1 The issuing and receiving of material for on-site storage shall be under the control of a responsible person (e.g., materials controller, unit foreman).

12.5.2 Adequate firefighting equipment shall be readily available and accessible in the storage area.

12.5.3 See Chapter I-7, *Fire Prevention*, for fire prevention requirements for storage areas.

12.5.4 All materials stored in tiers shall be stacked, racked, blocked, interlocked or otherwise secured to prevent sliding, falling or collapse.

12.5.5 Lumber shall be stacked such that it is stable and self-supporting and shall be on level and solidly supported sills. Piles shall not exceed 4.8 m (16 ft) in height if the lumber is handled manually or 6.0 m (20 ft) when handled with equipment. Used lumber shall have all nails removed before stacking.

12.5.6 Structural steel, poles, pipe, bar stock and other cylindrical materials, unless racked, shall be stacked and blocked so as to prevent spreading or tilting.

12.5.7 Material shall be stored on shelving rated for the load. Small items (e.g., nuts and bolts) shall be stored in bins suitably marked with their contents.

12.5.8 The safe loads allowed on racks and maximum stack heights shall be established and posted.

12.5.9 Materials on racks/shelves shall not be stacked to a height that disrupts existing fire protection sprinkler system capabilities (e.g., impedes the footprint of a sprinkler head).

12.5.10 In storage areas on elevated floors, the maximum safe load limit, in kg/m^2 and lb/ft^2, shall be conspicuously posted. Maximum safe loads shall not be exceeded.

12.5.11 Storage areas and walkways shall be maintained free of dangerous depressions, obstructions and debris.

12.5.12 Aisles and passageways shall be kept clear to provide for the free and safe movement of material handling equipment and personnel. Such areas shall be kept in good repair.

12.5.13 Storage areas that have multiple levels shall have ramps, blocking or grading to ensure safe movement of vehicles between the various levels.

12.5.14 Warnings of the dangers associated with hazardous materials shall be posted at their storage location. Chemical Hazard Bulletins (CHBs) and/or Material Safety Data Sheets (MSDSs) shall be readily available (e.g., in supervisor's office or posted on the storage area bulletin board). In addition, the following shall be affixed on hazardous material/chemicals in order of preference:

1. SA HAZCOM label.
2. Respective CHB.
3. Manufacturer's MSDS.

12.5.15 During the transfer of flammable liquids, portable containers shall be bonded and the dispensing storage tank grounded in order to prevent ignition by static electricity.

12.5.16 Storage areas shall be kept free from the accumulation of materials that constitute hazards due to tripping, fire, explosion or pests. Vegetation control shall be exercised when necessary.

12.6 Manual Handling

12.6.1 Manual material handling tasks shall be avoided as much as possible.

12.6.2 In the event that personnel are required to perform manual material handling tasks, the following shall be observed:

- Supervision shall assess the size, shape, weight and disposition of materials to be handled and plan the most efficient and safest method to accomplish the task.
- Workers shall be instructed in proper manual material handling techniques and practices prior to their work assignment. See Section 12.6.3.
- The assignment of manual material handling tasks shall consider personal physical limitations that vary among individuals. Care shall be taken so as to not exceed these limitations.
- Heavy materials requiring manual lifting shall be stored below waist height.
- The proper tools/lift-assist devices shall be provided for the job.
- Personal protection equipment (PPE) shall be worn as required.

12.6.3 There are four key requirements for performing a proper manual lift:

- A good grip. Ensure maximum use of the palm of the hand, the ball of the thumb and base of the fingers.
- A straight back. The person's back shall be kept straight to maintain its most natural and strongest position. This means that the knees and ankles must be bent and the chin kept well into the chest. The body must be positioned as close to the load as possible.
- Steady feet. Feet shall be spread apart the width of the hips with one foot slightly in front of the other.
- Arms close to the body. Arms shall be kept as close to the body as possible.

12.6.4 Personnel shall:

- Avoid extreme range of motion and twisting their body when lifting.
- Minimize reach and distance the load is carried.
- Avoid lifting loads above shoulder height.
- Minimize weight of loads (by mechanical aids, balancing contents, etc.).
- Keep objects as close to the body as possible.
- Seek assistance when performing manual material handling tasks that may be beyond one's physical capabilities.

12.6.5 In the event an object cannot be handled by just one individual or by a mechanical device, two or more individuals shall be used to handle the object. The movement of the object shall be coordinated in unison.

12.7 Materials Handling Equipment

12.7.1 Materials handling equipment shall be used in accordance with SA GIs, etc.:

- For forklifts, backhoes and other mechanical equipment, see Chapter III-2, *Mechanical and Heavy Equipment*, for further requirements.
- For cranes and other lifting equipment, see Chapter III-7, *Cranes and Lifting Equipment*, for further requirements.
- For lift beams, wire rope slings and nylon slings, see Chapter III-8, *Slings and Rigging Hardware*, for further requirements.

12.7.2 Only qualified operators/drivers shall operate power equipment.

12.7.3 Control of any moving load or material shall be maintained at all times.

12.7.4 Adequate clearances shall be maintained so that personnel are not struck, caught or pinned by moving loads or material handling equipment.

12.7.5 The load capacity of material handling equipment shall not be exceeded. When transferring a load, care shall be taken to avoid shock loading by careful handling of the load.

12.7.6 All equipment with rotating counterweights shall have the complete swing radius barricaded.

12.7.7 Jacks shall be level and set on a firm surface. Jacks shall be operated by hand, not by foot. Jack handles shall be removed at all times when not in use.

12.7.8 Sharp edges, odd sizes or shapes of loads, hazardous or fragile material, uneven weight distribution and routes of travel shall be taken into consideration when planning handling of materials.

12.7.9 Standard hand signals shall be used and clear concise communication maintained between designated signalmen and operators. The most efficient type of communication (e.g., radio or hand signals) shall be used.

12.7.10 Supervisors shall ensure that workers perform proper rigging to balance and control each lifted load. Personnel on the ground shall not stand below overhead loads. No loads shall be left unattended while suspended.

12.7.11 Environmental factors, such as distance visibility, wind velocity and changing soil conditions, shall be considered when planning large materials handling tasks at outside locations.

12.7.12 All vehicles shall be immobilized by chocking their wheels when loading and unloading materials.

12.7.13 When offloading flatbed trailers, personnel shall take precautions to avoid being injured by shifting materials, which may suddenly slide or twist.

12.7.14 Prior to unloading steel, poles, cross arms and similar materials, each load shall be thoroughly examined to ascertain if the load has shifted, binders or stakes have broken, or if the load is otherwise hazardous.

13. Heat Stress

13.1 Purpose

This chapter describes minimum requirements for recognizing, evaluating and preventing heat-related illnesses at work locations.

13.2 Responsibilities

13.2.1 Site Management, Supervisors and Foremen

A. When the potential for heat-related illness exists, monitor environmental conditions (e.g., air temperature, relative humidity) and communicate the current heat stress danger category and corresponding control measures to relevant Saudi Aramco (SA) and contactor employees. See Appendix A.

B. Document heat stress mitigation measures in the specific work plan, which shall specify the specific work practices to be implemented at the site to avoid heat-related illness during periods of high heat stress potential and may include:

- Scheduling the most strenuous work during the coolest times of the day (e.g., early morning and evening/night).
- Providing measures such as shading and local ventilation when work in direct sunlight is required.
- Monitoring employees for symptoms of heat-related illness.
- Rotating workers in and out of hot areas, as possible.
- Communicating locations of designated break/recovery areas, emergency reporting procedures and nearest medical facilities to workers.
- Scheduling work/rest rotations for workers according to the current heat index, which is based on temperature and relative humidity (see Appendix A).
- Adjusting work/execution plans (e.g., use mechanical/powered equipment to replace manual labor), as practical.

C. Do not let schedule or productivity demands supersede heat stress awareness or controls used to prevent heat-related illness.

D. Conduct periodic (e.g., weekly) safety meetings/talks during hot weather emphasizing heat stress hazards and precautions, with added emphasis on this risk during Ramadan if it occurs in summertime.

E. Display educational information related to heat stress conditions, illness/symptoms and preventive measures (e.g., Appendices A and B) on bulletin boards and break/recovery areas, etc. In addition, distribute heat

Saudi Aramco: Company General Use

stress information at safety meetings/talks, etc., in a form suitable for workers (e.g., laminated pocket cards).

F. Schedule heat stress training and monitor new workers and workers returning from vacation to ensure they acclimatize at a progressive, controlled rate to the change in environmental conditions.

G. Provide drinking water stations (e.g., coolers with chilled or ice water) for workers and remind them to drink plenty of water even if not thirsty.

H. Replenish drinking water supplies as needed to ensure availability and provide more frequent collection of sanitary wastewater from portable toilets.

I. Provide personal water bottles or insulated containers (2 liter capacity) to workers as needed (e.g., during high heat stress danger categories).

J. Provide designated shaded and cool areas for periodic "cool down" breaks and recovery from minor heat-related illness. Where possible, these areas are to be air conditioned.

K. Monitor the heat-related health condition of employees, as well as the effectiveness of any engineering/administrative controls and personal protective equipment (PPE) being used.

L. Be able to recognize early signs and symptoms of heat-related illness and take appropriate action to prevent serious heat illness (see Appendix B).

M. Respond appropriately to any heat-related illness (see Appendix B).

N. Be knowledgeable of emergency reporting and response procedures, including the location of the nearest medical facility with a qualified medical doctor who can provide proper treatment for a victim of severe heat exhaustion or heat stroke. See Chapter I-1, *Emergency Reporting and Investigation*, of this manual.

13.2.2 Employees

A. Follow instructions for controlling heat stress, including taking periodic "cool down" breaks and drinking enough water (see Appendix A). Begin drinking water early in the day.

B. Wear appropriate clothing (e.g., light colored, lightweight, breathable, loose clothing is best).

C. Know and be alert for signs/symptoms of heat-related illnesses in themselves and others. See Appendix B.

D. Take appropriate action upon developing symptoms of heat cramps, heat exhaustion or heat stroke. See Appendix B.

Saudi Aramco: Company General Use

13.3 Heat Stress Danger Category

13.3.1 When the potential for heat-related illness exists, the actual heat index (see Appendix A) shall be periodically determined (e.g., every hour) at the work site using calibrated weather monitoring equipment provided by the employer (e.g., the contractor company). In the absence of local environmental monitoring, air temperature and relative humidity may be obtained at a nearby location within Saudi Arabia (e.g., SA's "Weather Now" website: *http://weathernow.aramco.com.sa*). Use of this website, etc., shall not absolve the contractor company from the obligation to provide its own independent weather monitoring equipment.

13.3.2 The heat stress danger category, obtained from the current heat index (see Appendix A), shall be declared at the job site when the potential for heat-related illness exists.

13.3.3 The heat stress danger category (see Appendix A) shall be used to determine control measures as specified in Section 13.4 of this chapter.

13.3.4 The current heat stress danger category and corresponding control measures shall be communicated to employees as conditions change (e.g., by use of color-coded flags, information signs, mass distribution of SMS mobile phone text messages to site supervisors and other personnel in SA nonrestricted areas).

13.4 Control of Heat Stress

During periods of high heat stress potential (i.e., danger category III or IV in Appendix A) at the work site, the following measures shall be implemented as applicable to control heat stress.

13.4.1 Engineering Controls

A. Shade

Designated shaded break/rest areas shall be provided at a distance not greater than 100 m (330 ft) from personnel working in direct sunlight for extended periods of time. When feasible, shade is to be provided for work areas, including single shades to accommodate flagmen, etc.

B. Local Ventilation

When the air temperature is less than 37 °C (99 °F), fans or portable air movers may be used to reduce heat stress by increasing the air flow in the work area.

C. Portable Air Cooling Systems

Portable blowers with built-in air chillers shall be used as needed (e.g., when confined spaces and enclosed work areas have ambient temperatures

Saudi Aramco: Company General Use

exceeding 43 °C [110 °F]) to provide cooling for confined spaces and similar enclosed work areas.

13.4.2 Administrative Controls

A. Scheduling

Schedule work for the cooler times of the day, especially during the month of Ramadan if it falls in the summer.

B. Acclimatization

Deliberate acclimatization shall be used to expose new employees to work in a hot environment for progressively longer periods. New employees in jobs where heat levels may produce heat stress shall be exposed to 20% of normal exposure on day one, with a 20% increase in exposure each additional day.

C. Water Replacement (Hydration)

Workers shall be encouraged to drink plenty of water prior to the start of each shift. Ample supplies of cool drinking water shall be located within 100 m (330 ft) walking distance of each worker and in all designated break/rest areas. Workers shall drink small amounts of water on a frequent basis based on the actual heat index at the work site (see Appendix A). Sports drinks, juices and electrolyte replacement/rehydration mixes may also be made available to workers in order to help maintain the body's water and salt levels. However, workers shall not consume more of these drinks than plain water. Workers shall not take salt tablets due to potential adverse side effects (e.g., nausea/vomiting, dehydration).

D. Work/Rest Rotations

Work and rest rotations shall be based on the actual heat index at the work site. See Appendix A. Work rotations shall be established for workers performing remote activities in high heat stress exposures (e.g., flagmen). Workers shall be allowed additional break time and water as they deem necessary for their health.

E. Personal Monitoring

Employees shall work in teams and shall observe each other for signs of diminished capacity and heat-related illness. Prescribed check times and monitoring controls (see Section 13.5) shall be used to determine whether a worker is experiencing diminished capacity or symptoms of heat stress.

F. Red Heat Stress Danger Category IV Work Practices

The following additional precautions shall be taken while a red heat stress danger category IV, "Extreme Danger," (see Appendix A) exists at the work site:

Saudi Aramco: Company General Use

- SA proponent organization (SAPO) and/or contractor site management shall assess the risks associated with work to be performed in direct sunlight for an extended period of time. Based on the resulting risk assessment, SAPO management shall determine if the work shall continue if it does not fall in the following categories: (1) deemed necessary for continuing plant operations by the SAPO, (2) emergency maintenance or (3) rescue operations.
- Engineering controls such as shade and ventilation/cooling systems are required for work activities that involve increased risk (e.g., work in confined spaces, at elevated locations or involving high physical exertion).
- Workers exhibiting symptoms of serious heat-related illness shall immediately seek medical attention and be allowed to fully recover before returning to work.
- Workers shall be provided break periods during work activities. The duration and number of breaks shall be established during the daily work planning based on type of work activities and control measures provided (see Section 13.4). Work durations shall be monitored to ensure proper breaks are taken.
- Workers shall be advised to drink one cup of water every 10 minutes. Each worker shall be provided with their own personal water bottle/insulated container (2 liter capacity) and have it with him at all times. A “no water, no work” policy shall be strictly adhered to.
- No person shall work alone (i.e., isolated) while a red heat stress danger category IV condition exists at the work site.
- Extra precautions shall be taken when flame-resistant clothing (FRC) are required to be worn while a red heat stress danger category IV exists at the work site, as such fabrics can intensify heat stress. Other types of fabrics which may increase heat stress (e.g., polyester, nylon) shall not be worn while a danger category IV exists at the work site.

G. Recovery

Any employee experiencing symptoms of a heat-related illness (see Appendix B) shall be allowed to fully recover in an appropriate recovery area before returning to work. Recovery areas shall be shaded, cool and supplied with water. Victims of severe heat exhaustion or heat stroke shall be immediately evacuated to the nearest medical facility with a qualified medical doctor who can provide proper treatment. Such incidents shall be properly reported.

H. Special Considerations during Ramadan

Appropriate planning and heat stress mitigation measures shall be incorporated into the specific work plan (e.g., Job Safety Analysis) for workers who are fasting during Ramadan if it occurs during the summer. Supplies of cool drinking water shall be made available for workers as

Saudi Aramco: Company General Use

needed during Ramadan (e.g., for a worker experiencing symptoms of a heat-related illness).

I. Other Administrative Controls

Other administrative controls shall be used as appropriate to reduce heat stress, including using powered equipment to replace manual labor, limiting worker occupancy duration within confined areas and modifying work plans.

13.4.3 Personal Protective Controls

A. Ice Cooling Garments

Commercially available ice vests, neck/wrist wraps, etc., may be provided to employees as needed (e.g., who work for extended periods inside a confined space during hot weather). Ice packets shall be replaced as required.

B. Clothing

Light colored, lightweight, breathable clothing that covers as much of the body as possible, including the head, shall be worn when working in direct sunlight. Since FRC and other synthetic fabrics (e.g., polyester, nylon) increase heat stress, appropriate planning and mitigation measures shall be incorporated into the specific work plans (e.g., Job Safety Analysis) for personnel wearing this type of clothing while working in conditions with a high heat stress potential.

C. Wetted Clothing/Towels

During periods of high heat stress potential, employers are to provide employees with wetted terry cloth towels and/or allow them to wet their normal work clothes as necessary to provide cooling for their body. Cool water supplies (not ice water) separate from drinking water shall be used for this purpose (e.g., containers of clean water with a faucet/spigot for sanitary distribution, instead of dipping).

13.5 Training

13.5.1 Heat stress awareness training shall be provided just before and during the hot summer months to all applicable personnel (e.g., who work outdoors) and those who manage personnel and have responsibilities for establishing heat stress mitigation measures.

13.5.2 Heat stress awareness training shall include the following elements:

- Hazards of heat stress.
- Recognition of signs and symptoms of heat stress. See Appendix B.
- First aid procedures for heat stroke and other heat-related illnesses.

Saudi Aramco: Company General Use

- Employee responsibilities in avoiding/responding to heat-related illness.
- Supervisor responsibilities in avoiding/responding to heat-related illness.
- Dangers of the use of drugs, including prescription and over-the-counter medicines, in hot work environments.
- Measures employees can take to minimize the effects of heat stress (hydration, work pace, use of wet towels, good nutritional habits, etc.).
- Personal monitoring and buddy system controls.

  Note:

  Training shall emphasize that heat stress can affect an individual's ability to reason clearly. This may cause a person to fail to recognize the signs and symptoms of heat stress. For this reason, self-monitoring shall be augmented by prescribed check times and monitoring controls. Check times are intervals at which a heat stress-trained supervisor or observer (including a coworker) checks to see if there are obvious symptoms of heat-related illness or if there is any sense of diminished capacity in them and their coworkers, rather than waiting for symptoms to appear.

13.5.3 First aid and other emergency responders shall be properly trained in the recognition and treatment of heat-related illnesses.

Saudi Aramco: Company General Use

Appendix A

Heat Index					
Danger Category	**Heat Index**	**Heat Stress Illness/Symptoms**	**Work:Rest (Minutes)**	**Min. Water Needed ***	**Progressive Controls**
IV. Extreme Danger	≥ 52	Heat stroke imminent.	20:10	1 cup every 10 minutes	See Section 13.4.2(F) for progressive controls
III. Danger	39–51	Heat cramps, heat exhaustion or heat stroke *likely* with prolonged exposure and physical activity.	30:10	1 cup every 15 minutes	Work under shade
II. Extreme Caution	30–38	Heat cramps, heat exhaustion or heat stroke *possible* with prolonged exposure and physical activity.	50:10	1 cup every 20 minutes	No working alone (buddy system)
I. Caution	25–29	Fatigue possible with prolonged exposure and/or physical activity.	Normal/ Scheduled	1 cup every 20 minutes	Visual monitoring of workers in direct sun and heavy work
*** 1 cup = 250 ml**					

Heat Index		**Relative Humidity**								
		10%	**20%**	**30%**	**40%**	**50%**	**60%**	**70%**	**80%**	**90%**
Air Temp °C	**>50**	**	**	**	**	**	**	**	**	**
	50	48	**	**	**	**	**	**	**	**
	49	47	**	**	**	**	**	**	**	**
	48	45	53**	**	**	**	**	**	**	**
	47	44	51	**	**	**	**	**	**	**
	46	43	49	**	**	**	**	**	**	**
	45	42	47	**	**	**	**	**	**	**
	44	41	46	52**	**	**	**	**	**	**
	43	40	44	49	**	**	**	**	**	**
	42	39	42	47	54**	**	**	**	**	**
	41	38	41	45	51	**	**	**	**	**
	40	37	39	43	48	**	**	**	**	**
	39	36	38	41	46	52**	**	**	**	**
	38	35	37	39	43	49	55**	**	**	**
	37	34	35	38	41	46	51	**	**	**
	36	33	34	36	39	43	48	54**	**	**
	35	32	33	35	37	41	45	50	**	**
	34	31	32	33	35	38	42	47	52**	**
	33	31	31	32	34	36	40	44	48	54**
	32	30	30	31	32	34	37	40	44	49
	31	29	29	30	31	33	35	38	41	45
	30	28	28	29	30	31	33	35	38	41
	29	27	27	28	29	30	31	33	35	37
	28	27	27	27	28	28	29	31	32	34
	27	26	26	26	27	27	28	29	30	31
	26	25	25	26	26	27	27	27	28	28

Note: This table is adapted from "Heat Stress: Improving Safety in the Arabian Gulf Oil and Gas Industry" from *Professional Safety: Journal of the American Society of Safety Engineers*, August 2008, pages 31-36.

Saudi Aramco: Company General Use

Appendix B

Heat-Related Illnesses

1. Heat Cramps

Although heat cramps are not dangerous, they are an early warning sign for heat exhaustion and that the body's ability to cope with heat is being exceeded.

Causes:
- Occurs when the body loses too much salt through sweating.
- Attributed to an electrolyte imbalance caused by sweating.

Symptoms include:
- Painful cramping of the muscles (e.g., arms, legs or stomach).
- Hot, moist skin.
- Slightly elevated body temperature.

Treatment includes:
- Stop all activity.
- Rest in a cool, shaded area (e.g., designated break/recovery area).
- Loosen clothing.
- Drink water.
- If symptoms persist, seek medical aid.

Another early indication that heat stress conditions may be present is the appearance of heat rash, which is an itchy rash that occurs when the skin becomes swollen and plugs the sweat glands. This is not a life-threatening condition.

2. Heat Exhaustion

Heat exhaustion is the body's response to an excessive loss of water and salt by sweating. Heat exhaustion poses a higher risk to older employees and those with coronary artery disease or emphysema (a lung condition causing breathing impairment).

Causes:
- Occurs when the fluids and/or salt lost in sweating are not replaced.
- Enlarged surface blood vessels.

Symptoms include:
- Heavy sweating.
- Intense thirst and cool, moist skin.
- Weakness and dizziness.
- Headache and blurred vision.
- Nausea and vomiting.
- Pale or flushed appearance.
- Mood changes such as irritability or confusion.
- Rapid pulse.
- Fainting.

Saudi Aramco: Company General Use

Treatment includes:

- Move the victim to a cool, shaded area (e.g., designated break/recovery area).
- Call for medical help.
- Loosen the victim's clothing.
- Remove unnecessary clothing.
- Shower or sponge the victim's skin with cool water.
- Have the victim drink water or sport drinks that have electrolytes (e.g., Gatorade).

Notes:

1. Heat exhaustion can rapidly progress to heat stroke if not properly treated. People suffering from heat exhaustion must not be expected to take care of themselves because they may lack coordination and become confused. Heat exhaustion requires fast response to prevent worsening heat stress problems.

2. Remember that sweating only cools the body if the sweat evaporates. If it cannot evaporate, it cannot cool. Thus, even under moderate or cool working conditions, it is possible to suffer heat stress if you are inside protective clothing that interferes with your body's cooling or working in high-humidity conditions.

3. Heat Stroke

Heat stroke is a medical emergency and death or permanent tissue damage may occur if treatment is not given promptly. Collapse is often misinterpreted as a heart attack or head injury.

Causes:

- Occurs when the body no longer sweats and holds so much heat such that the body's system of temperature regulation fails and body temperature reaches dangerous levels.
- Body depleted of salt and water.

Symptoms include:

- Dry, hot skin with no sweating.
- High body temperature (above 40 °C [103 °F]).
- Strong, rapid pulse.
- Chills.
- Weakness, nausea, vomiting.
- Mental confusion.
- Seizures or convulsions.
- Collapse, loss of consciousness.

Treatment includes:

- Immediately call or arrange for professional medical help.
- Cool the victim down as much as possible while waiting for medical help:
  - Move the victim immediately to a cool, shaded area.
  - Loosen or remove heavy clothing.
  - Have the victim lie flat with feet elevated.
  - Fan and mist the victim's body with water.
  - Monitor the victim's breathing.
  - Have the victim drink water or sport drinks that have electrolytes (e.g., Gatorade). Do not give fluids if the victim is unconscious.

Saudi Aramco: Company General Use

Notes:

1. Sometimes, heat stoke occurs after the person has already developed heat exhaustion, but heat stroke can also strike suddenly with little warning.

2. Regardless of the worker's protest, no person suspected of being ill from heat stroke shall be sent home or left unattended unless/until a medical doctor has specifically approved such an action.

Saudi Aramco: Company General Use

1. Excavations and Shoring

1.1 Purpose

This chapter describes minimum safety requirements for excavation and shoring activities, including trenches.

1.2 References

Saudi Aramco (SA) General Instructions (GIs):

GI 2.100, *Work Permit System*

GI 2.709, *Gas Testing Procedure*

GI 1021.000, *Street and Road Closure, Excavation Reinstatement and Traffic Controls*

SA Engineering Standards (SAESs):

SAES-A-111, *Borrow Pit Requirements*

SAES-A-114, *Excavation and Backfill*

SAES-O-119, *Work Permit Procedures*

SAES-Q-006, *Asphalt Concrete Paving*

SA Safety Handbook

SA Standard Drawing (SASD):

AB-036899, *Standard Specifications for Shoring Trenches*

American National Standards Institute (ANSI)/American Society of Safety Engineers (ASSE):

ANSI/ASSE A10.12, *Safety Requirements for Excavation*

U.S. Code of Federal Regulations (CFR):

29 CFR 1926 Subpart P, *Excavations* (OSHA 1926, Subpart P)

1.3 Excavation Planning

1.3.1 Before excavation activities begin, the following factors shall be evaluated by an excavation competent person who has the proper training and/or experience:

A. Purpose, size of excavation and work to be performed.

B. Soil classification (best if determined by a geotechnical/soil analysis).

C. Stability and proximity of adjacent structures, including the location and depth of foundations.

D. Location of underground obstructions such as pipes, electric cables and other utilities.

E. Presence of nearby process equipment or piping with the potential for release of hydrocarbon or toxic materials (e.g., H_2S).

F. Weather and soil moisture conditions, especially high water table.

G. Sources of soil vibrations (highway traffic, machinery, railroads, etc.).

H. Location and type of barricades, signs and lighting.

I. Method of excavating and removal of soil.

J. Protective system to be used (i.e., benching, sloping or shoring). See photo below for an example of benching.



K. Emergency rescue equipment required.

L. The impact the excavation will have on access for emergency vehicles/personnel and egress of personnel in the event of an emergency.

M. Means of entry and exit.

1.3.2 A Pre-Excavation Checklist shall be properly completed and made available upon request. See Appendix B for a sample Pre-Excavation Checklist.

1.3.3 Adequate and suitable protective systems (i.e., benching, sloping or shoring) shall be planned for if the excavation will be at a depth of 1.2 m (4 ft) or more in soil other than stable rock, as per Section 1.7. Excavations less than 1.2 m (4 ft) deep may also require protective systems if sidewall cave-in hazards exist.

1.3.4 An excavation plan shall be prepared as follows:

A. For excavations greater than 2.4 m (8 ft) deep in Type B or C soil, an excavation plan (e.g., shoring design calculations and drawings) that meets the requirements of this chapter shall be developed by a degreed civil/structural engineer. See Table 1.1.

B. For excavations greater than 6 m (20 ft) deep, regardless of soil type, an excavation plan (e.g., shoring design calculations and drawings) that meets the requirements of this chapter shall be developed by a degreed civil/structural engineer and reviewed by the SA Consulting Services Department (CSD).

C. If an excavation plan is required and shoring is used, the plan shall:

- Describe the materials and shoring system to be used.
- Indicate whether or not any shoring components will remain after filling or backfilling.
- Provide plans, sketches and/or details along with calculations.
- Indicate the sequence and method of shoring installation and removal.

1.4 Permits

1.4.1 SA work permit(s) per GI 2.100 shall be obtained as required before excavation work is started.

1.4.2 The work permit issuer shall ensure that underground utilities/installations have been located and marked (e.g., by flags or chalk) before excavation activities begin.

1.4.3 For grassroots projects, the contractor shall develop and implement its own work permit procedures until such time as the SA work permit system goes into effect. These work permit procedures shall incorporate the excavation safety provisions and checklists from this chapter.

1.4.4 For other work sites not covered by the SA work permit system (e.g., nonrestricted areas), the SA proponent organization (SAPO) shall develop and implement excavation safety procedures in accordance with this chapter. Development of these excavation procedures shall include participation by Utilities, Communications, Power Operations Department (POD), Pipelines, etc., as applicable.

1.4.5 A properly completed Confined Space Entry Permit shall be obtained to enter excavations equal to or greater than 1.2 m (4 ft) deep.

1.5 Underground Utilities and Installations

1.5.1 Before excavation activities begin, the SAPO (e.g., engineering/technical) shall confirm and mark (e.g., by flags or chalk) the location of any known or suspected underground pipes, cables, vessels, structures, etc., that are in the area of the proposed excavation.

1.5.2 The SAPO shall contact appropriate SA organizations, such as Utilities, Communications, POD, Pipelines, etc., and request them to accurately mark the locations of their underground utilities/installations.

1.5.3 The SAPO shall ensure that non-SA underground cables or utilities are also located and marked prior to excavating. SAPO inquiries may be addressed to Government Affairs.

1.5.4 Underground utilities and installations shall be located by reference to drawings, discussion with the relevant organizations and by use of cable/pipe locators.

1.5.5 Mechanical excavators shall not be used until all underground utilities and installations have been exposed by hand digging.

1.5.6 Mechanical excavators shall not be used within 3 m (10 ft) of underground utilities or installations. Pneumatic breakers shall only be used where necessary to break concrete or other hard materials.

1.5.7 Excavations are not permitted under an existing foundation. Excavations are not allowed to intersect a forty-five degree (45°) plane extending downward from the bottom edge of an existing foundation, unless a properly engineered support system is installed prior to start of work or the excavation is in stable rock.

1.5.8 Existing underground piping, manholes, electrical cables, duct banks, sidewalks, etc., that could be undermined by an excavation shall be properly braced or shored.

1.6 Dewatering

1.6.1 Employees shall not work in excavations where there is pooled water, or in excavations in which water is accumulating, unless adequate precautions have been taken to protect employees. The necessary precautions vary with each situation, but shall include water removal (dewatering) to control the level of accumulating water (e.g., by pumping) and may also include support shield or shoring systems to protect from cave-ins (see Figures 1.3, 1.6, 1.9, 1.14, etc).

1.6.2 If water is controlled or prevented from accumulating by the use of water-removal equipment, the water-removal equipment and operations shall be regularly monitored to verify proper operation.

1.6.3 If excavation work interrupts the natural drainage of surface water (e.g., streams), then diversion ditches, dikes or other suitable means shall be used to prevent surface water from entering the excavation and to provide adequate drainage of the area adjacent to the excavation.

1.6.4 Excavations that have been subject to runoff (e.g., from a rain storm) shall be inspected before use by the excavation competent person in accordance with Section 1.13.

1.7 Protection Against Sidewall Cave-In

1.7.1 Protective Systems

A. Suitable shoring shall be installed, or the sides benched or sloped back to a safe angle, for all excavations 1.2 m (4 ft) deep or greater, or for soil piles over 1.5 m (5 ft) high. Refer to Table 1.3 and Figures 1.1 to 1.8 of this chapter for details.

B. The determination of slope angle, benches or choice and design of shoring shall be based on an evaluation by the excavation competent person of pertinent factors, such as:

- Type of soil (i.e., stable rock, Type A, B or C soil) (see Appendix A, Table 1.2 and Glossary).
- Depth of excavation.
- Possible variation in water content of the soil while the excavation is open.
- Anticipated changes in soil from exposure to air, sun or water.
- Loading imposed by structures, equipment, overlying material or stored material.
- Vibrations from equipment, blasting, traffic or other sources.

C. Since any previously disturbed soil is considered to be Type C soil, excavations in previously disturbed soil (e.g., fill) shall not be sloped at an angle greater than 1½ horizontal to 1 vertical, measured from the horizontal.

D. Shoring materials shall be in good condition.

E. Workers shall be trained to look for signs of shoring or sidewall bulge, surface cracking, sand penetration from behind shoring or cracked shoring, which can be a warning sign of a collapse that is about to happen.

1.7.2 Excavation Boxes and Trench Shields (see Figure 1.9)

A. Portable excavation boxes or trench shields may be used for the protection of personnel instead of shoring, benching or sloping.

B. Excavation boxes and trench shields shall be designed, constructed and maintained to provide protection equal to or greater than the required shoring, sloping or benching. The design for custom-made excavation boxes or trench shields shall be reviewed by CSD before use.

C. Excavation boxes and trench shields shall be installed in accordance with the manufacturer's instructions and to restrict lateral or other movement of the box or trench shield. Excavation boxes and trench shields shall be capable of withstanding any sudden application of lateral loads.

D. Excavation boxes and trench shields shall be extended a minimum of 0.45 m (1.5 ft) above the excavation.

1.7.3 Hydraulic Shoring for Excavations

Hydraulic shoring can be used for protection against cave-ins in excavations that do not exceed 6 m (20 ft) in depth (see Figures 1.12 and 1.13, and Tables 1.4 to 1.6).

1.7.4 Timber Shoring for Excavations (see Figure 1.14)

A. Timber shoring can be used as a method of protection against cave-ins in excavations that do not exceed 6 m (20 ft) in depth.

B. Timbers shall be sound, free from large or loose knots and have proper dimensions.

C. Timber shoring shall be designed in accordance with Tables 1.7 to 1.9 or SA Standard Drawing AB-036899. Layout and shoring for trenches not greater than 1.2 m (4 ft) wide and not more than 2.4 m (8 ft) deep may be as per Figure 1.16.

D. Timber used as cross braces or stringers (wales) for shoring shall not be less than 10 cm x 10 cm (4 inches x 4 inches) actual cross-section size. Larger timber braces and stringers may be required, including for excavations in soft or loose soils more than 1.2 m (4 ft) wide or more than 2.4 m (8 ft) deep. Refer to Tables 1.7 to 1.9 or SA Standard Drawing AB-036899 for details.

E. The cross-section sizes of cross braces, stringers and uprights listed in Tables 1.7 to 1.9 refer to minimum actual dimensions (not nominal dimensions) of oak timber or equivalent with a bending strength of not less than 850 psi. Use of nominal sizes is permitted only if: (1) all nominal size timber is certified and permanently marked by the lumber mill and/or supplier as being Douglas fir or equivalent with a bending strength of not less than 1,500 psi, and (2) shoring layout is per Tables C4 to C6 of ANSI A10.12 or Tables C-2.1 to C-2.3 of OSHA 1926, Subpart P, Appendix C, "Timber Shoring for Trenches."

F. Vertical spacing of cross braces and stringers (wales) down the sidewall of the excavation shall not exceed 1.2 m (4 ft), unless a greater vertical

spacing is allowed by Tables 1.7 to 1.9 or SA Standard Drawing AB-036899. Cross braces shall always be used with stringers (wales).

G. Horizontal spacing of cross braces (e.g., along the length of a trench) shall not exceed 1.8 m (6 ft), unless a longer horizontal spacing is allowed by Tables 1.7 to 1.9 or SA Standard Drawing AB-036899). At least two cross braces (upper and lower) shall be used at each bracing location.

1.7.5 Scaffold Tubing Cross Braces for Excavations

A. Scaffold tubing, with compatible screwjacks and base plates, may be used as cross braces for excavations not more than 1.2 m (4 ft) wide and not more than 2.4 m (8 ft) deep. Scaffold tubing shall not be used as stringers (wales) or uprights.

B. For excavations less than 1.8 m (6 ft) deep, scaffold tubing cross braces shall be horizontally spaced not more than 1.8 m (6 ft) apart.

C. For excavations between 1.8 m (6 ft) and 2.4 m (8 ft) deep, scaffold tubing cross braces shall be horizontally spaced not more than 1.2 m (4 ft) apart.

D. Scaffold tubing used as cross braces for shoring shall have at least a 4.0 mm wall thickness and shall be permanently embossed (stamped) before galvanizing with "BS 1139" or "EN39-4" (Type 4). Refer to Chapter II-2, *Scaffolding*, of this manual, for further information.

1.7.6 When used, excavation screw jacks shall be installed in accordance with Figure 1.11 and the manufacturer's instructions, including being equally spaced and properly aligned.

1.7.7 The top cross brace shall not be more than 0.6 m (2 ft) below the top of the excavation and the lowest cross brace shall not be more than 0.6 m (2 ft) above the bottom of the excavation.

1.7.8. Steel sheet piling or other comparable material used as shoring shall be designed by a degreed civil/structural engineer.

1.7.9 Materials and spoils shall be set back at least 0.6 m (2 ft) from the edge of the excavation (see Figure 1.16).

1.7.10 Where personnel, equipment or members of the general public are allowed to cross an excavation, a tightly planked bridge or walkway with standard guardrails shall be provided and kept clear of excavated materials or other tripping hazards.

1.8 Entry and Exit

1.8.1 Stairways, ladders, ramps and/or other safe means of egress shall be located in excavations that are 1.2 m (4 ft) or more in depth so as to require no more than 7.5 m (25 ft) of lateral travel distance for personnel (i.e., ladders shall be spaced at least every 15 m [50 ft] along a trench).

1.8.2 Ladders shall conform to the requirements in Chapter II-3, *Ladders and Stepladders*.

1.8.3 Ladders shall rest on the bottom of the excavation and shall extend at least 1 m (3 ft) above the top landing point.

1.8.4 Personnel shall not be in or near an excavation where they could be struck by operating heavy equipment (e.g., trackhoes, rock breakers, backhoes). Personnel shall not be within the operating radius of the equipment.

1.8.5 Personnel shall not be in an excavation where they could be exposed to a possible cave-in, such as could be caused by equipment operating or passing nearby. Personnel shall not be within a distance less than the depth of the excavation from the edge where equipment is located. See Figure 1.15.

1.9 Hazardous Atmospheres and Materials

1.9.1 Atmospheric Testing

A. Gas tests shall be performed per GI 2.709 when there is reason to suspect oxygen deficiency or the presence of a flammable/toxic atmosphere in an excavation.

B. When using controls for the purpose of reducing atmospheric contaminants to acceptable levels, gas testing shall be conducted on a regular basis and before the work crew is to re-enter the excavation (e.g., after breaks, lunch) to ensure that the atmosphere remains safe. See Chapter I-6, *Confined Spaces*.

1.9.2 Exhaust Gases

When an internal combustion engine is used in or near an excavation, precautions shall be taken to ensure that exhaust gases are discharged so as not to be a hazard to personnel working in the excavation.

1.9.3 Hazardous Materials

A. When hazardous materials are known or suspected (e.g., sludge, asbestos), excavation work shall not be started until the SA Environmental Protection Department (EPD) is contacted and has evaluated the potential hazard(s) and specified the precautions to be taken.

B. If materials suspected of being hazardous are unearthed during excavation activities, all work shall stop until the material is identified by the SA EPD, appropriate removal and disposal procedures are established, and work practices are modified as needed.

1.10 Emergency Response

1.10.1 Appropriate emergency rescue equipment (e.g., breathing apparatus, full-body harness and lifeline, basket stretcher) shall be readily available during work.

1.10.2 A standby man shall be in attendance until the work is completed for any excavation that has been determined to be a confined space (see Chapter I-6, *Confined Spaces*).

1.10.3 A fire watch shall remain in place any time an ignition source (e.g., welding, cutting) is present in the excavation and for 30 minutes after the ignition source has been removed.

1.10.4 Personnel entering bell-bottom pier holes or other similar deep and confined excavations shall wear a full-body harness with a lifeline attached to it. The lifeline shall be separate from any line used to handle materials and shall be individually attended at all times while the employee wearing the lifeline is in the excavation. Mechanical devices shall be available on site to lift incapacitated workers from the excavation.

1.11 Edge Protection, Markers and Fixed Lighting

1.11.1 Whenever it is necessary to place or operate power shovels, derricks, trucks, materials, soil banks or other heavy objects near an excavation, the sides of the excavation shall be sheet-piled, shored and braced as necessary to safely resist the extra pressure.

1.11.2 Only excavating and backfilling equipment (trackhoes, rock breakers, backhoes, front loaders, etc.) are permitted within 2 m (6.5 ft) of the edge of an excavation.

1.11.3 Motor vehicles, cranes and heavy equipment shall be kept away from the edge of the excavation a distance of 2 m (6.5 ft) or the depth of the excavation, whichever is greatest, unless the excavation is in stable rock or is protected against collapse by shoring that has been designed or approved by a degreed civil/structural engineer (see Section 1.7 and Figure 1.10).

1.11.4 Hard barricades (e.g., concrete or water-filled plastic “jersey” barriers, metal fencing) shall be used to keep motor vehicles, cranes and heavy equipment at the proper distance away from the excavation.

1.11.5 When use of hard barriers is impractical inside a fenced SA plant area (i.e., does not involve public access), vehicular traffic near the excavation shall be controlled by flagmen and the excavation shall be flagged with caution tape and well lit for night (see GI 1021.000).

1.11.6 Pedestrian barricades shall be placed no less than 1 m (3 ft) from the edge of the excavation.

1.11.7 If people or vehicles could be in the vicinity of the excavation after dark, warning lights shall be used to mark the limits of the work. If possible, the grade should slope away from the excavation.

1.12 Roads, Streets and Sidewalks

1.12.1 Excavation work on or near roads, streets and sidewalks shall meet the requirements of GI 1021.000 and shall not be performed without prior approval of the relevant authorities.

1.12.2 Saudi Arabian Government approval shall be obtained through SA Government Affairs prior to excavation work on, under (e.g., thrust boring), or near a public highway, railway or utility right-of-way (see Chapter II-11, *Roadworks*).

1.12.3 Trenches in roads and streets shall be completely covered with properly designed steel plates where traffic flow needs to be maintained over the trench. Such trenches shall be properly shored to prevent cave-in (see Section 1.7). The trench cover plate thickness shall be selected based on the width of the trench, grade of steel and weight of heaviest expected traffic (e.g., fire truck, fully loaded tractor-trailer truck). See Figures 1.17 to 1.20 for typical cover plates for road trenches. Figure 1.21 shows typical sidewalk protection.

1.13 Inspections

1.13.1 A documented inspection shall be performed by an excavation competent person before workers are allowed to initially enter an excavation or after a change in site conditions (e.g., rain storm, groundwater infiltration, sidewall deterioration, adjacent ground fissuring). For excavations greater than 2.4 m (8 ft) deep, a documented inspection by the excavation competent person shall be performed each morning before workers shall be allowed to enter the excavation.

1.13.2 An excavation safety checklist shall be used to document these initial/daily inspections (see Appendix B for a sample excavation inspection checklist that shall be completed and signed each day by the excavation competent person). If there is an unsafe condition, workers shall not be allowed to enter the excavation.

1.13.3 Appendix B also contains a sample excavation safety pocket card that is to be used by others at any other time (e.g., work permit issuers/receivers, SA and contractor employees who work in or near excavations, Project Management and proponent personnel). These excavation safety pocket cards are available from the area Loss Prevention office.

1.14 Backfilling

Backfilling and removal of shoring shall be accomplished first by backfilling up to a level allowing for the removal of the lower braces. Another layer of backfill shall be

positioned in the excavation up to the next layer of braces to be removed. Removal of shoring shall progress together with the backfill from the bottom to the top of the excavation. In unstable soil, ropes shall be used to pull out the jacks or braces from above after all employees have exited the excavation. All excavations shall be backfilled and the surface left in good condition.

1.15 Borrow Pits

1.15.1 Borrow pit boundaries (e.g., residential, industrial plants, sub-stations, highways) shall be located at the distance noted in SAES-A-111.

1.15.2 Pedestrian traffic shall be prohibited in borrow pit areas. Signs in Arabic and English shall be posted around roped-off/barricaded areas to warn personnel to stay away from borrow pits.

1.15.3 Dust concentrations, noise levels and security fencing (as applicable) associated with borrow pit operations shall be in accordance with SA requirements.

1.16 Thrust Boring

1.16.1 Site-Specific Procedure

The primary contractor shall submit to the SAPO a site-specific procedure for each thrust boring operation, which is based on the specialist contractor's general procedures and site-specific conditions. The site-specific procedure shall include, but not be limited to, plans for how the specialist contractor will address the following requirements.

1.16.2 Minimum Safety Requirements

A. The sidewalls of launching and reception pits shall be protected by steel sheet piling or be properly benched/sloped.

B. Proper means of access and egress shall be provided.

C. Work permits shall be per SA GI 2.100.

D. Excavation plans shall be submitted to the SAPO before work commences.

E. Prior to beginning excavation activities, the area shall be checked for buried pipes, cables, telephone lines and other underground services.

F. The perimeter of the pits shall be protected with solid barriers to prevent personnel or animals from falling in. The site shall be properly barricaded and warning signs posted.

G. When mobile heavy equipment is working close to the pits, substantial wooden stop logs and barricades shall be placed at the minimum approach distance (see Section 1.11).

H. Warning signs shall be placed around the work area and at all approaches to the job site.

I. Documented safety meetings with the work force shall be conducted each morning to advise them of potential hazards as the work progresses.

1.16.3 Hazardous Atmospheres

A. No hot work shall be performed if the lower explosive limit (LEL) is above 0%.

B. Welding of pipe joints shall comply with Chapter II-10, *Cutting, Welding and Brazing*.

C. Coating of pipe joints shall comply with Chapter II-9, *Painting and Coating*.

1.16.4 Emergency Rescue Equipment

A. Rescue equipment, including full-body harness with lifeline and a basket stretcher, shall be readily available and attended by a standby man outside the pit.

B. Fire extinguishers shall be placed at strategic points.

C. A safe means of access and egress shall be provided and maintained.

1.16.5 Nighttime Work

Adequate lighting in, around and at all approaches to the job site shall be provided for nighttime work.

1.16.6 Equipment

A. Cranes, sidebooms and other elevating/lifting equipment shall be SA certified.

B. Heavy equipment operators shall be SA certified.

C. Microtunnel launching and reception pits shall be large enough to accommodate a full pipe joint.

D. A concrete base shall be constructed to support hydraulic jacking equipment.

G. Rear walls shall be reinforced with a thrust plate designed to bear the thrust forces generated by the jacking operation.

H. Where necessary, a dewatering system shall be installed.

I. Bentonite slurry storage tank areas shall be barricaded to contain spillage.

J. Warning signs shall be posted near the slurry storage areas to keep personnel a safe distance from the spillage. Additional warning signs shall state that personnel shall not walk on the slurry crust.

1.16.7 Auger Boring

A. Spoil drawn back to the launch pit through the casing by a series of auger flights shall be safely removed in buckets and disposed of properly.

B. The progress of the auger head and the amount of spoil being withdrawn shall be monitored by the contractor in order to detect an open space (cavity) and the probability of a resultant road collapse.

1.16.8 Horizontal Directional Drilling

A. Any existing buried services shall be uncovered and a topography survey of the location performed by the contractor.

B. A plan shall be submitted by the contractor showing the required clearance from the proposed bore.

C. As the pilot bore commences, the operator shall ensure there is an adequate supply of mud (Bentonite) jetting from the drill head and the operator shall make any required directional adjustments as drilling progresses.

D. After the reamer has followed the rods to the machine end and the bore has reached the required diameter, the product pipe shall be carefully pulled through the bore to the required tie-in point.

E. Barricades and warning signs shall be erected to keep unauthorized personnel away from the heavy equipment and from the cable hauling the pipe.

F. Flagmen shall be present but at a safe distance from the pipe hauling cable when it is under stress.

APPENDIX A: TABLES AND FIGURES

lanning and Design esponsibili

Depth	Stable Rock	Soil Type A	Soil Type B	Soil Type C
1.2 m (4 ft) – 2.4 m (8 ft)	Excavation Competent Person	Excavation Competent Person	Excavation Competent Person	Excavation Competent Person
> 2.4 m (8 ft) – 6 m (20 ft)	Excavation Competent Person	Excavation Competent Person	Civil/Structural Engineer	Civil/Structural Engineer
> 6 m (20 ft) *	Civil/Structural Engineer	Civil/Structural Engineer	Civil/Structural Engineer	Civil/Structural Engineer

* CSD review of excavation plan is required if excavation is greater than 6 m.

Summary of Soil Types

Soil Type	Description of Soil Type
Stable Rock	Natrural soild mineral matter that can be excavated with vertical sides, such as sandstone.
Type A	Previously undisturbed cohesive or cemented soil, such as clay or marl.
Type B	Less cohesive soil, such as a mix of sand, rocks and clay.
Type C	Less cohesive soil. Examples are: gravel, sand, muddy or freely seeping soils, submerged rock that is not stable, or a layered system. Previously disturbed soil is Type C soil.

Maximum Allowable Slopes

Soil Type	Maximum Allowable Slopes (H:V) for Excavations Less Than 6 m (20 ft) Deep
Stable Rock	Vertical (90°)
Type A	3/4:1 (53°)
Type B	1:1 (45°)
Type C	1-1/2:1 (34°)

Note: Numbers shown in parentheses next to maximum allowable slopes are angles expressed in degrees from the horizontal. Angles have been rounded off.

Figure 1.1 Sloped Excavations Made in TYPE A SOIL

All simple slope excavations made in Type A soil that are 6 m (20 ft) or less in depth shall have a slope of not greater than 3/4 horizontal to 1 vertical.

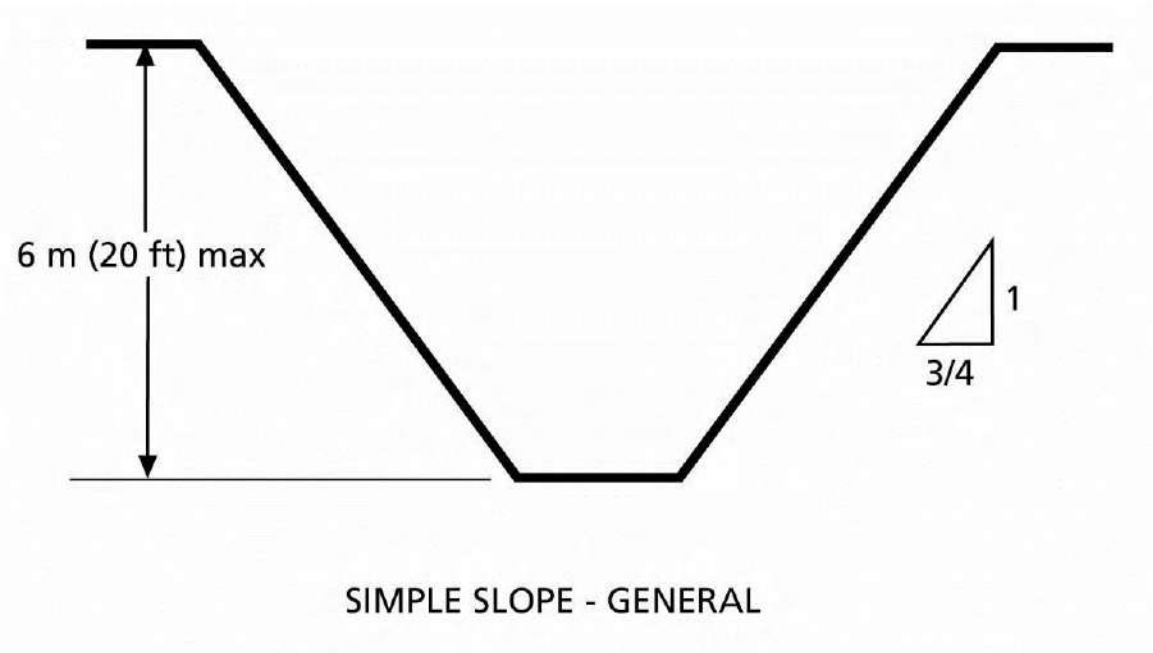

SIMPLE SLOPE - GENERAL

Figure 1.2 Benched Excavations Made in TYPE A SOIL

All benched excavations made in Type A soil that are 6 m (20 ft) or less in depth shall have a maximum allowable slope of 3/4 horizontal to 1 vertical and maximum bench dimensions as follows.

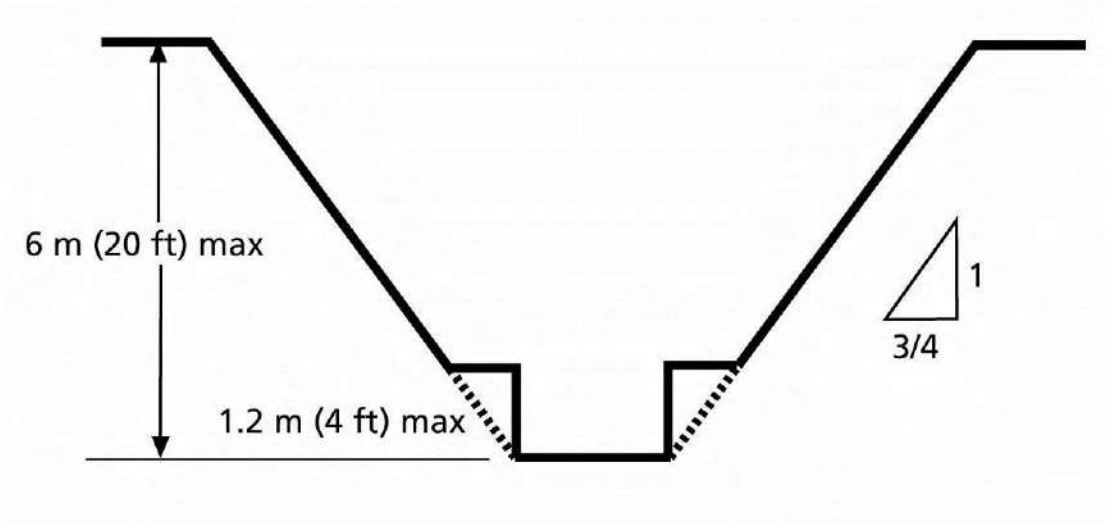

Simple Bench

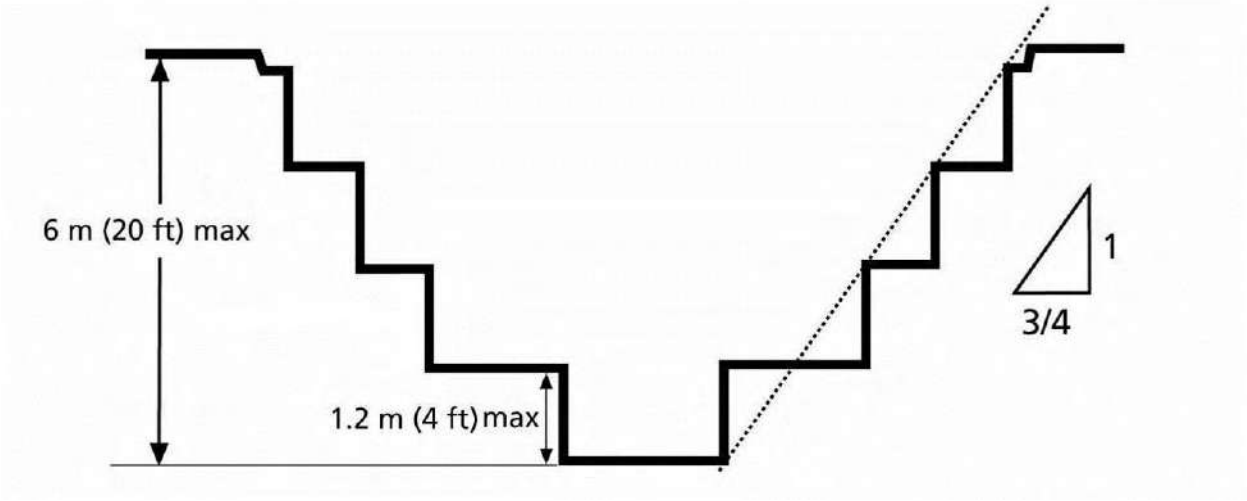

Multiple Bench

Figure 1.3 Supported or Shielded Excavations Made in TYPE A SOIL

All excavations made in Type A soil that are 6 m (20 ft) or less in depth, which have vertically sided lower portions that are supported or shielded, shall have a maximum allowable slope of 3/4 to 1. The support or shield system shall extend at least 0.45 m (18 inches) above the top of the vertical side.

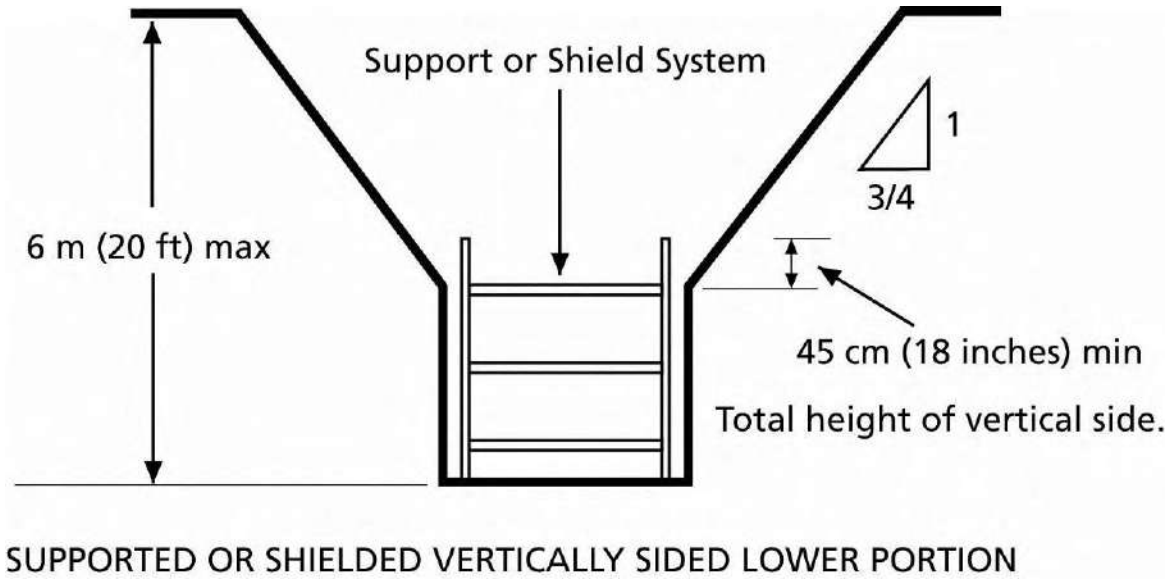

Figure 1.4 Sloped Excavations Made in TYPE B SOIL

All simple slope excavations made in Type B soil that are 6 m (20 ft) or less in depth shall have a slope of not greater than 1 horizontal to 1 vertical.

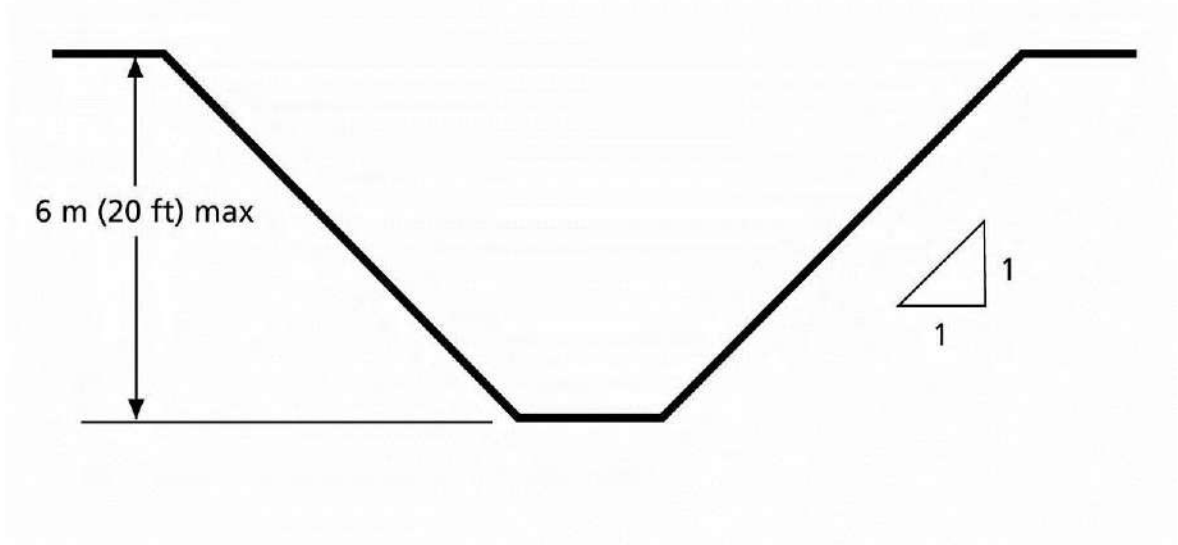

Simple Slope

Figure 1.5 Benched Excavations Made in TYPE B SOIL

All benched excavations made in Type B soil that are 6 m (20 ft) or less in depth shall have a maximum allowable slope of 1 horizontal to 1 vertical and maximum bench dimensions as shown below. Benched excavations that are unsupported or unshielded are permitted only in cohesive soils.

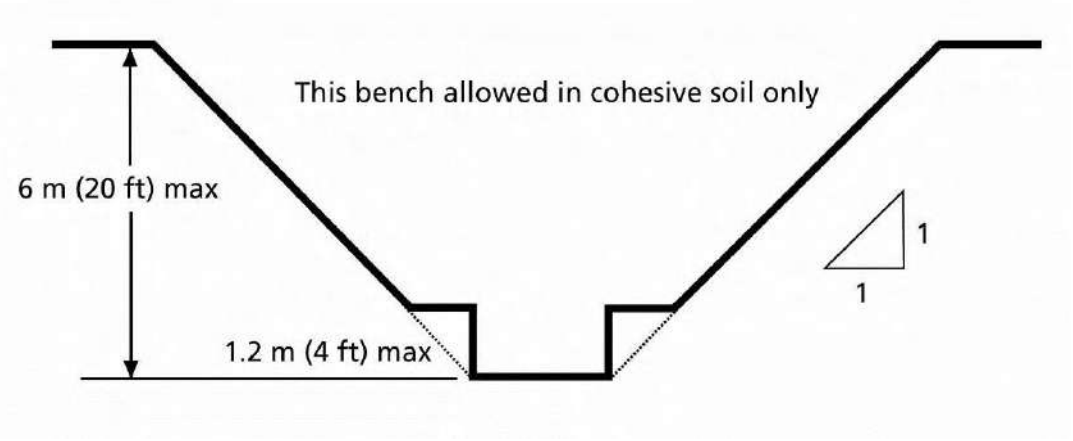

Simple Bench

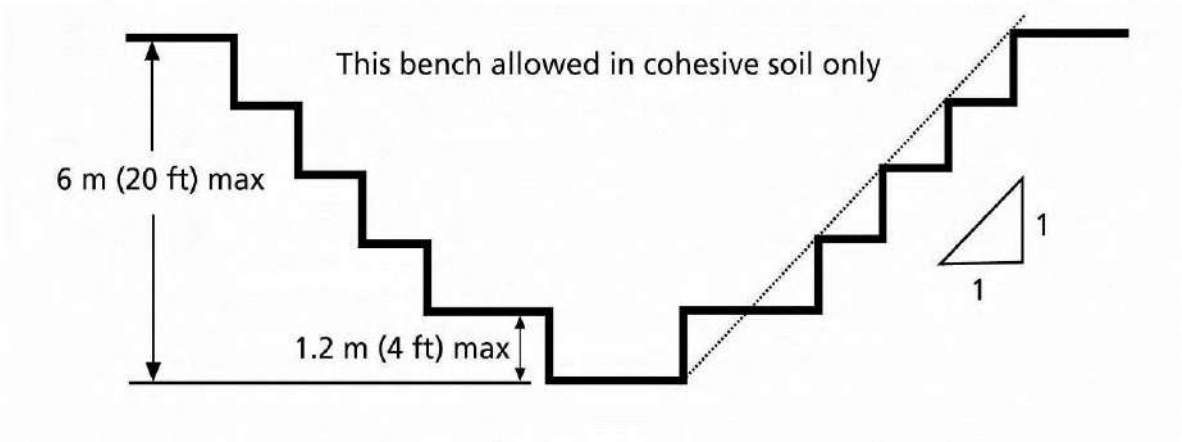

Multiple Bench

Figure 1.6 Supported or Shielded Excavations Made in TYPE B SOIL

All excavations made in Type B soil that are 6 m (20 ft) or less in depth that have vertically sided lower portions shall be shielded or supported to a height at least 0.45 m (18 inches) above the top of the vertical side. All such excavations shall have a maximum allowable slope of 1:1.

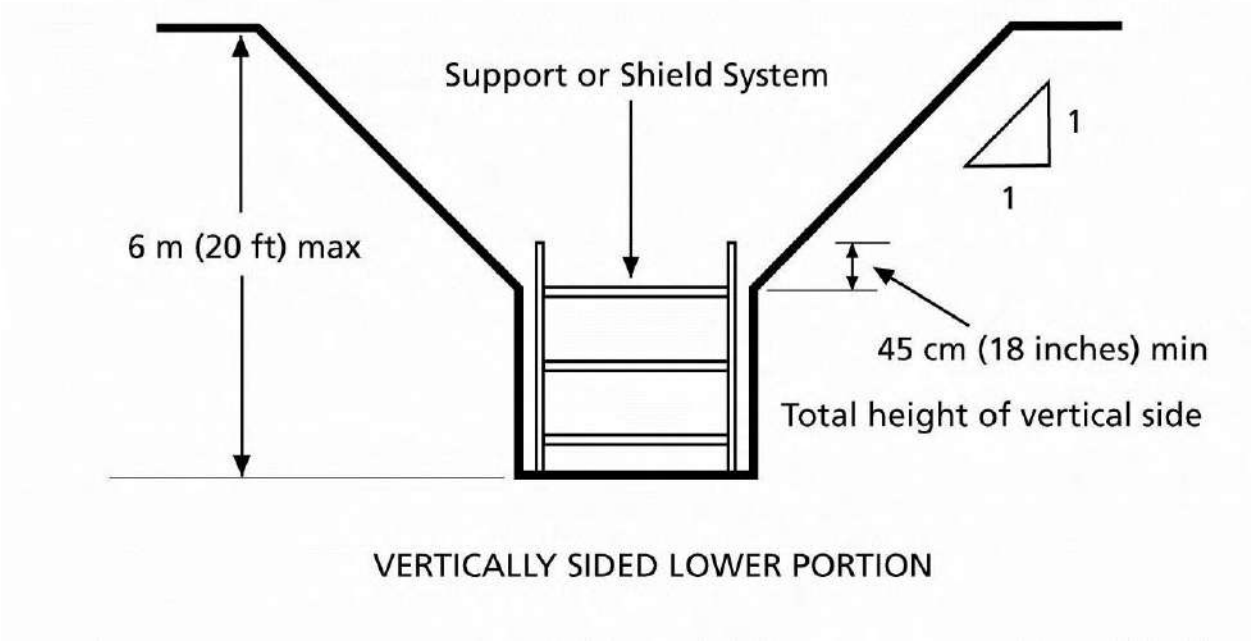

Figure 1.7 Excavations Made in TYPE C SOIL

All simple slope excavations made in Type C soil that are 6 m (20 ft) or less in depth shall have a slope of not greater than 1-1/2 horizontal to 1 vertical.

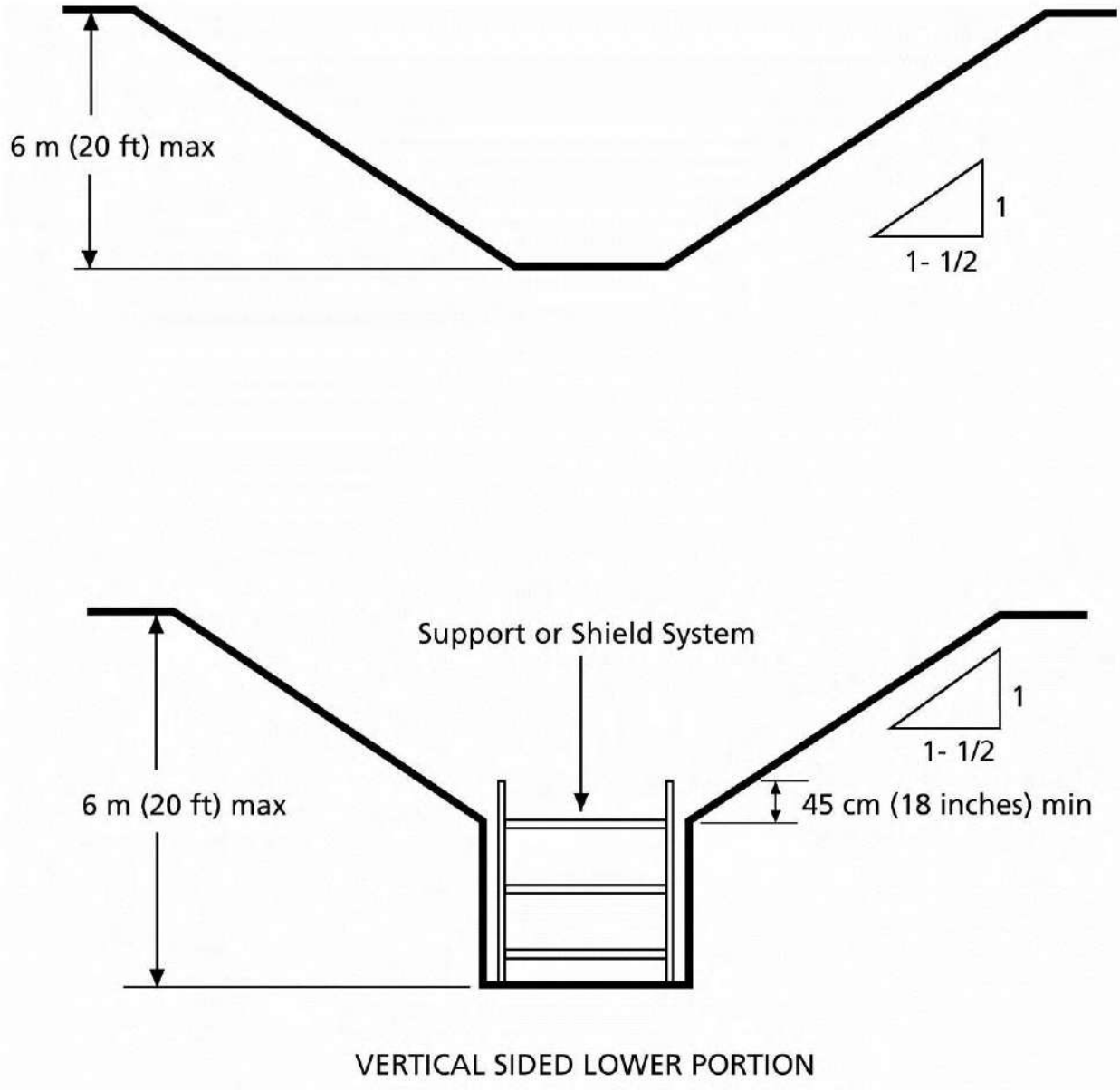

Figure 1.8 Excavations Made in Layered Soils

All excavations made in layered soils that are 6 m (20 ft) or less in depth shall have a maximum allowable slope for each layer as set forth below.

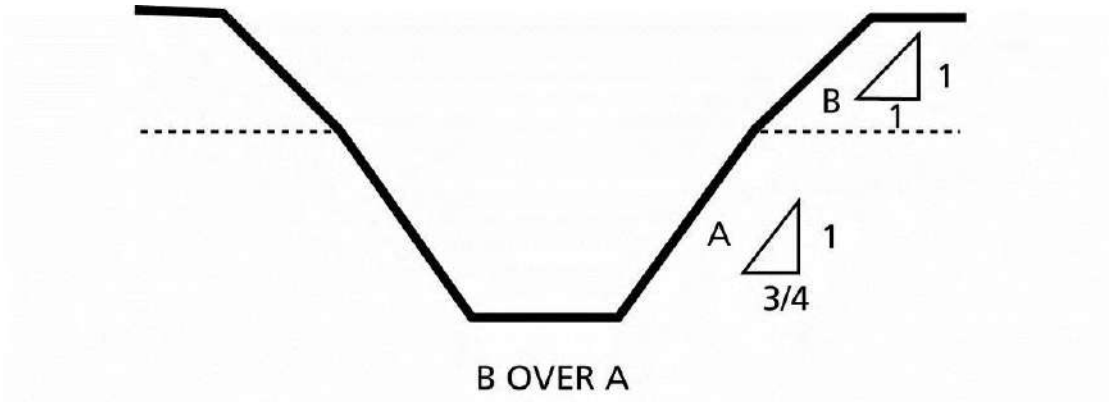

B OVER A

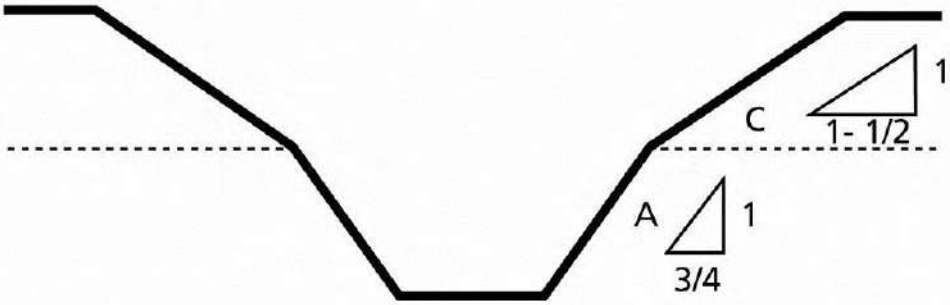

C OVER A

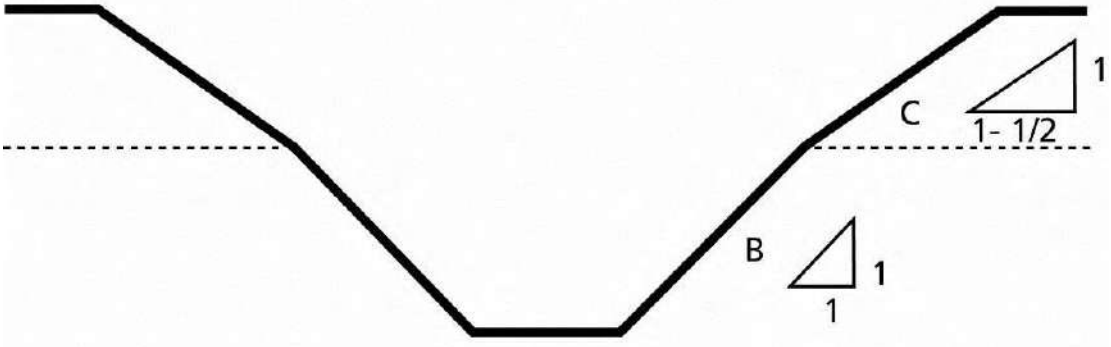

C OVER B

Figure 1.8 (Continued) Excavations Made in Layered Soils

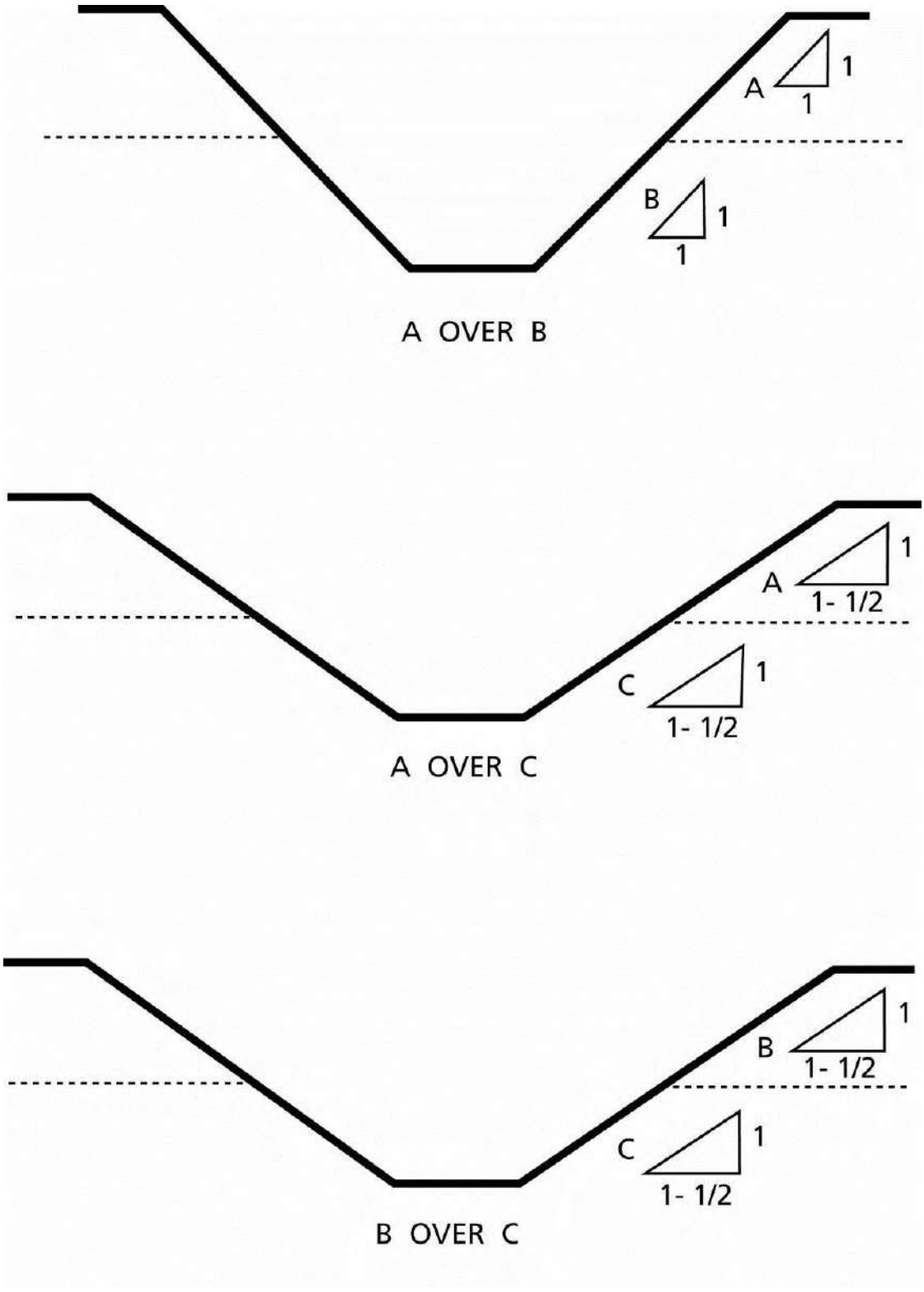

Figure 1.9 Examples of Trench Shields

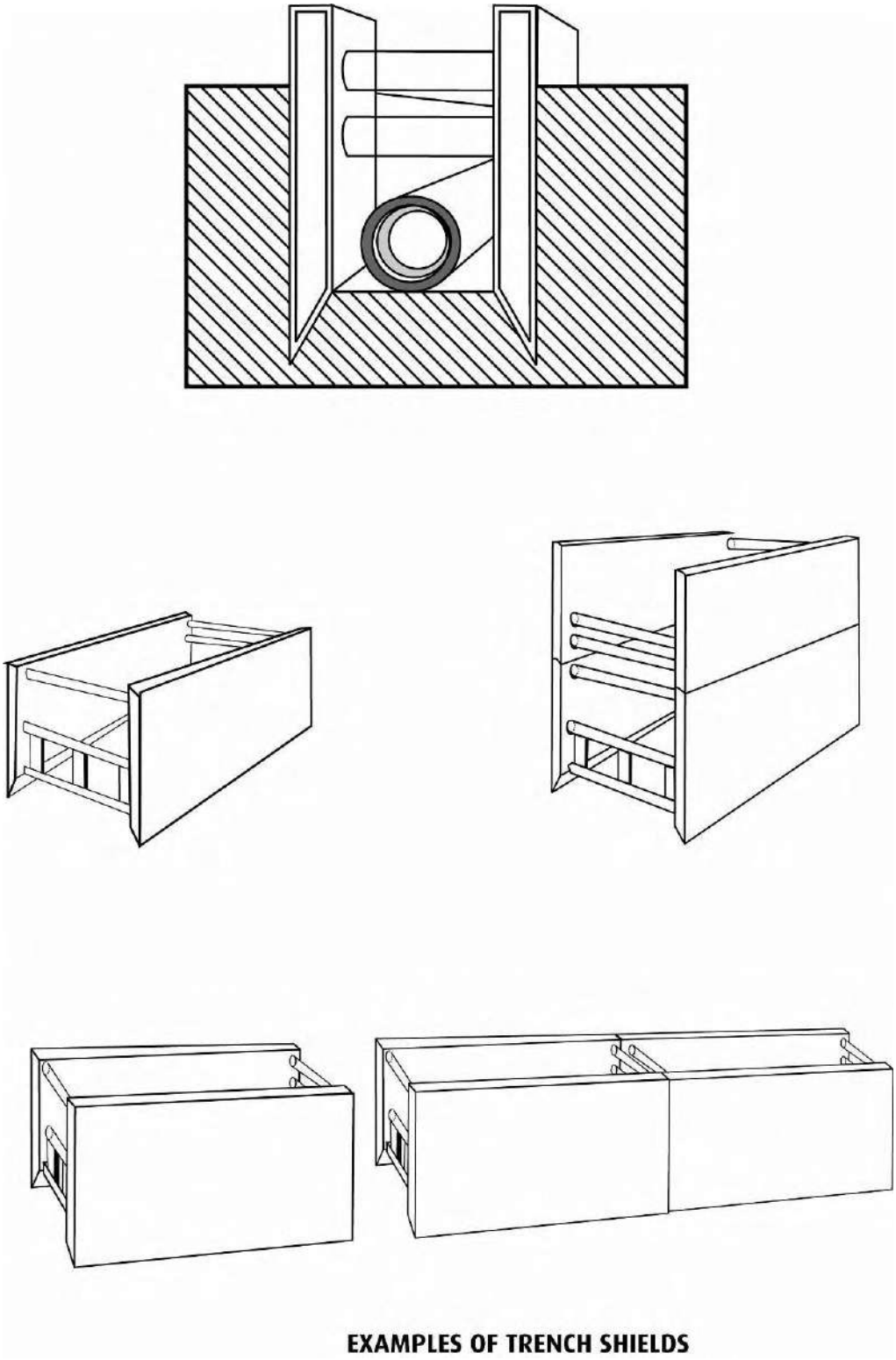

Figure 1.10 Safe Distance Back from Top of Slope for Storage of Materials or Placing Equipment (TYPE A SOIL)

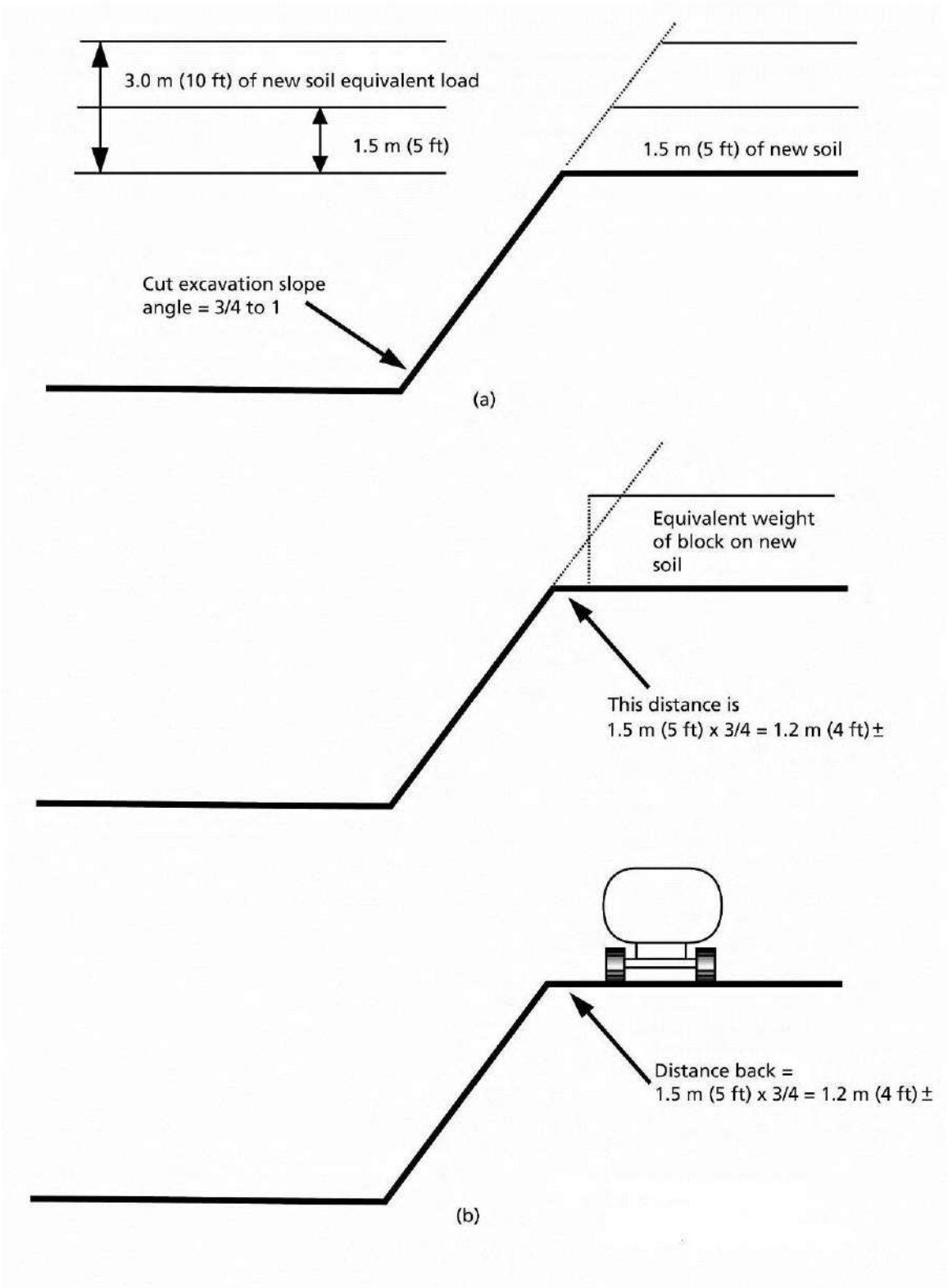

Figure 1.11 Excavation Screw Jacks

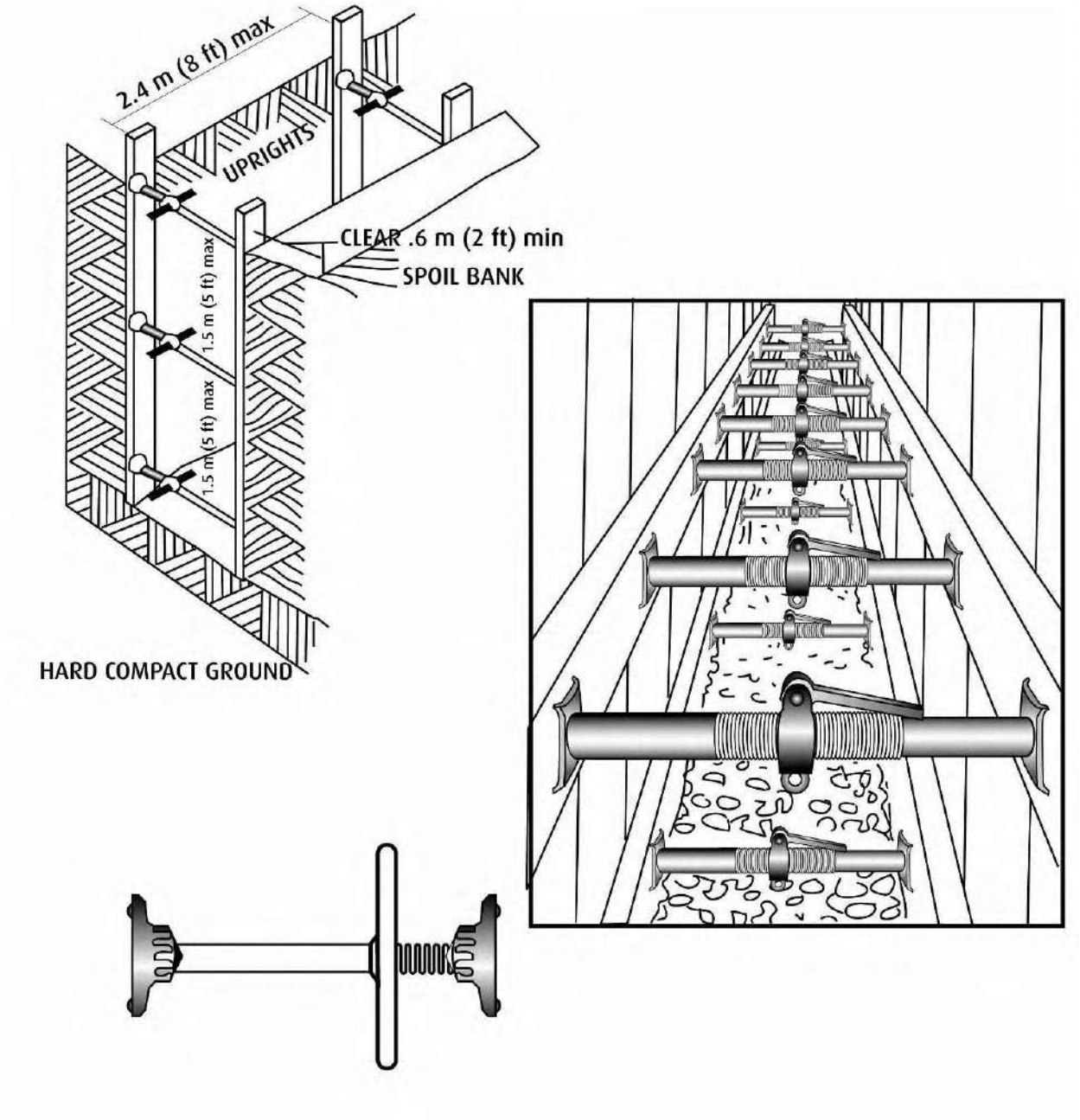

Figure 1.12 Aluminum Hydraulic Shoring: Typical Installations

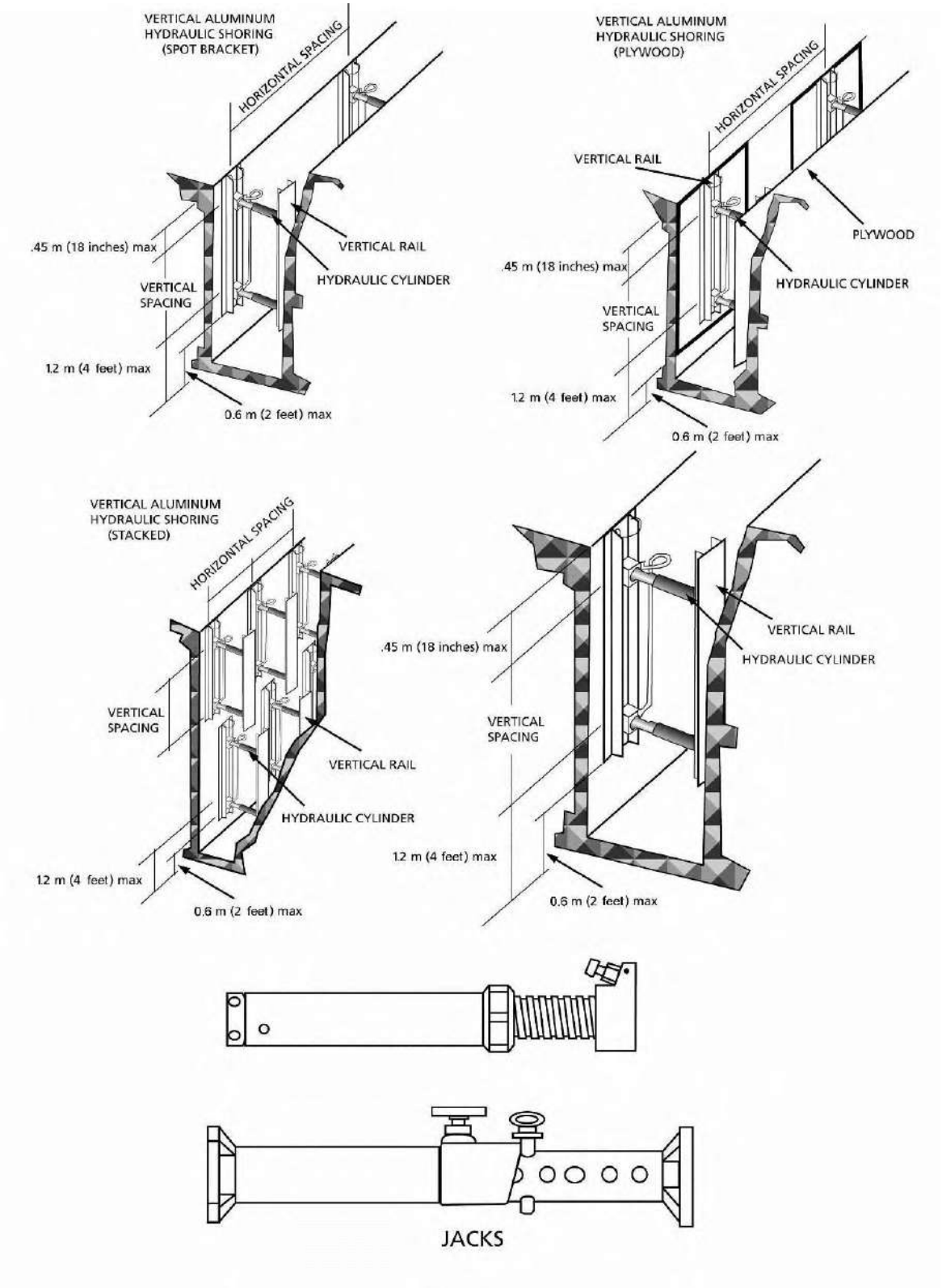

Aluminum Hydraulic Shoring, Vertical Shores for

	Hydraulic Cylinders				
			Width of Excavation		
Depth of Excavation (ft)	Maximum Horizontal Spacing (ft)	Maximum Vertical Spacing (ft)	Up to 8 ft	Over 8 up to 12 ft	Over 12 up to 15 ft
Over 5 up to 10	8	4	2 inches diameter	2 inches diameter	3 inches diameter
Over 10 up to 15	8	4	2 inches diameter	2 inches diameter	3 inches diameter
Over 15 up to 20	7	4	2 inches diameter	2 inches diameter	3 inches diameter
Over 20	Excavation plan shall be prepared by a degreed civil/structural engineer and reviewed by CSD				

Hydraulic Shoring, Vertical Shores for

	Hydraulic Cylinders				
			Width of Excavation		
Depth of Excavation (ft)	Maximum Horizontal Spacing (ft)	Maximum Vertical Spacing (ft)	Up to 8 ft	Over 8 up to 12 ft	Over 12 up to 15 ft
Over 5 up to 10	8	4	2 inches diameter	2 inches diameter	3 inches diameter
Over 10 up to 15	6.5	4	2 inches diameter	2 inches diameter	3 inches diameter
Over 15 up to 20	5.5	4	2 inches diameter	2 inches diameter	3 inches diameter
Over 20	Excavation plan shall be prepared by a degreed civil/structural engineer and reviewed by CSD				

Aluminum Hydraulic Shoring Waler Systems

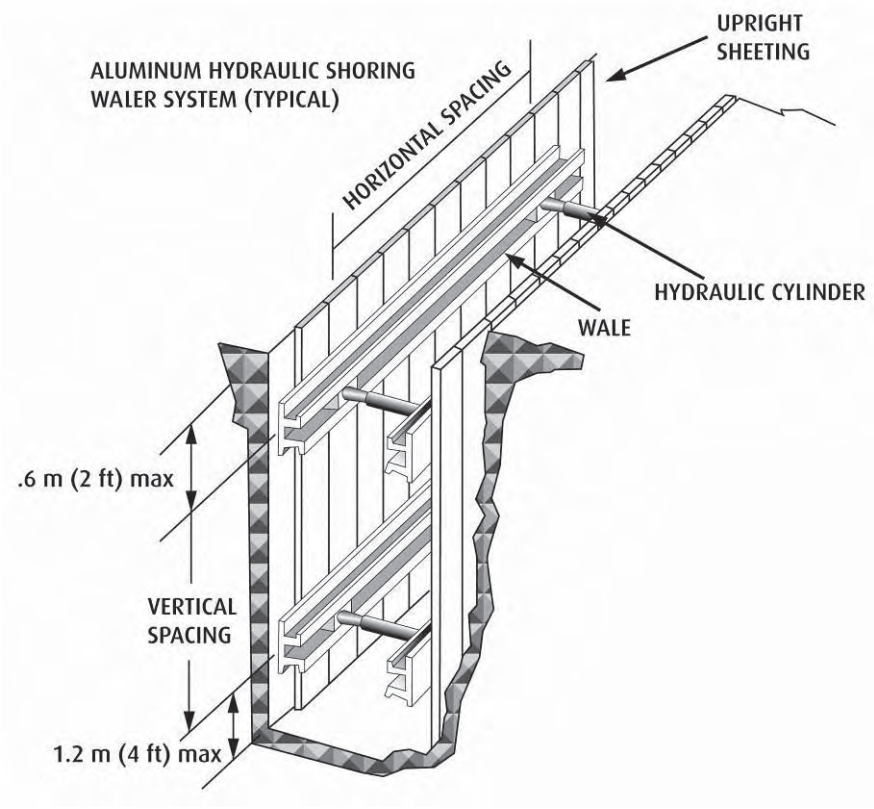

Aluminum Hydraulic Shoring Waler Systems f

Depth of excavation (ft)	Wales		Hydraulic Cylinders								
	Vertical Spacing (ft)	Section Modulus (inch³)	Width of Excavation (ft)						Maximum Horizontal spacing (on center)		
			Up to 8		Over 8 up to 12		Over 12 up to 15		Solid Sheet	2 ft	3 ft
			Horiz. Spacing (ft)	Cylinder Diameter (inches)	Horiz. Spacing (ft)	Cylinder Diameter (inches)	Horiz. Spacing (ft)	Cylinder Diameter (inches)			
Over 5 up to 10	4	3.5	8.0	2	8.0	2	8.0	3	---	---	3 x 12
		7.0	9.0	2	9.0	2	9.0	3			
		14.0	12.0	3	12.0	3	12.0	3			
Over 10 up to 15	4	3.5	6.0	2	6.0	2	6.0	3	---	3 x 12	—
		7.0	8.0	3	8.0	3	8.0	3			
		14.0	10.0	3	10.0	3	10.0	3			
Over 15 up to 20	4	3.5	5.5	2	5.5	2	5.5	3	3 x 12	---	—
		7.0	6.0	3	6.0	3	6.0	3			
		14.0	9.0	3	9.0	3	9.0	3			
Over 20	Excavation plan shall be prepared by a degreed civil/structural engineer and reviewed by CSD										

Figure 1.14 Example of a Timber Shoring Protective System

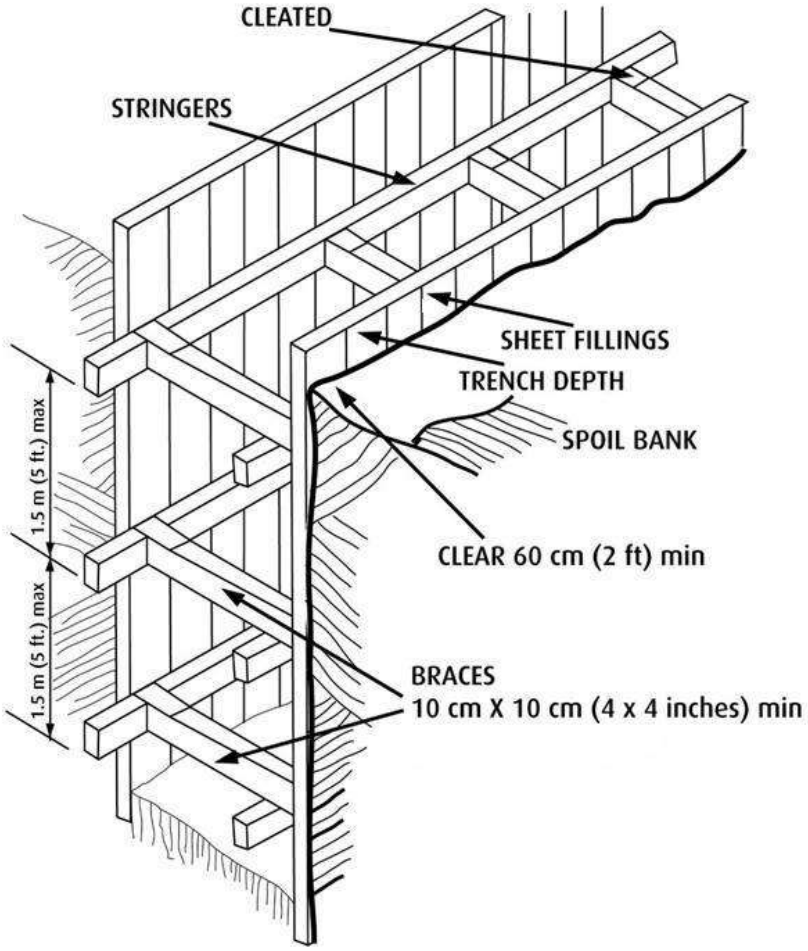

Figure 1.15 Personnel Clearance Requirements When Vehicles or Heavy Equipment are Near the Edge of the Excavation

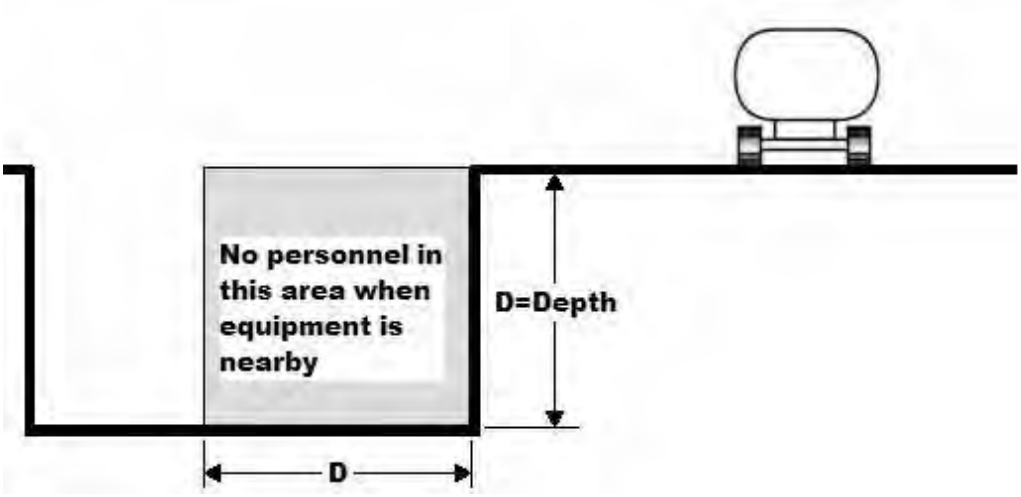

Timber Excavation Shoring Minimum Timber Requirements*

Depth of Excavation (ft)	Size (Actual) and Spacing of Members**												
	Cross Braces						Stringers		Uprights				
	Horizontal Spacing (ft)	Width of Excavation (ft)					Vertical Spacing (ft)	Size (inches)	Vertical Spacing (ft)	Maximum Allowable Horizontal Spacing (ft)			
		Up to 4	Up to 6	Up to 9	Up to 12	Up to 15				Close	4	5	6	8
5 to 10	Up to 6	4 x 4	4 x 4	4 x 6	6 x 6	6 x 6	4	Not Req'd	---				2 x 6	
	Up to 8	4 x 4	4 x 4	4 x 6	6 x 6	6 x 6	4	Not Req'd	---					2 x 8
	Up to 10	4 x 6	4 x 6	4 x 6	6 x 6	6 x 6	4	8 x 8	4			2 x 6		
	Up to 12	4 x 6	4 x 6	6 x 6	6 x 6	6 x 6	4	8 x 8	4				2 x 6	
10 to 20	Up to 6	4 x 4	4 x 4	4 x 6	6 x 6	6 x 6	4	Not Req'd	---				3 x 8	
	Up to 8	4 x 6	4 x 6	6 x 6	6 x 6	6 x 6	4	8 x 8	4		2 x 6			
	Up to 10	6 x 6	6 x 5	6 x 6	6 x 8	6 x 8	4	8 x 10	4			2 x 6		
	Up to 12	6 x 6	6 x 6	6 x 6	6 x 8	6 x 8	4	10 x 10	4				3 x 8	
15 to 20	Up to 6	6 x 6	6 x 6	6 x 6	6 x 8	6 x 8	4	6 x 8	4	3 x 6				
	Up to 8	6 x 6	6 x 6	6 x 6	6 x 8	6 x 8	4	8 x 8	4	3 x 6				
	Up to 10	8 x 8	8 x 8	8 x 8	8 x 8	8 x 10	4	8 x 10	4	3 x 6				
	Up to 12	8 x 8	8 x 8	8 x 8	8 x 8	8 x 10	4	10 x 10	4	3 x 6				
Over 20	Excavation plan shall be prepared by a degreed civil/structural engineer and reviewed by CSD													

* Mixed oak or equivalent with a bending strength of not less than 850 psi.

** Timber sizes shown are actual (not nominal) sizes. Manufactured members of equivalent strength may be substituted for wood.

Note: Maximum spoils height is 0.6 m (2 ft) within a horizontal distance away from the edge of the excavation equal to the depth of the excavation.

inimum equirements

Depth of Excavation (ft)	Size (Actual) and Spacing of Members**										
		Cross Braces						Stringers		Uprights		
	Horizontal Spacing (ft)	Width of Excavation (ft)					Vertical Spacing (ft)	Size (inches)	Vertical Spacing (ft)	Maximum Allowable Horizontal Spacing (ft)		
		Up to 4	Up to 6	Up to 9	Up to 12	Up to 15				Close	2	3
5 to 10	Up to 6	4 x 6	4 x 6	6 x 6	6 x 6	6 x 6	5	6 x 8	5			
	Up to 8	6 x 6	6 x 6	6 x 6	6 x 8	6 x 8	5	8 x 10	5			
	Up to 10	6 x 6	6 x 6	6 x 6	6 x 8	6 x 8	5	10 x 10	5			
	See Note 1											
10 to 15	Up to 6	6 x 6	6 x 6	6 x 6	6 x 8	6 x 8	5	8 x 8	5		2 x 6	
	Up to 8	6 x 8	6 x 8	6 x 8	8 x 8	8 x 8	5	10 x 10	5		2 x 6	
	Up to 10	8 x 8	8 x 8	8 x 8	8 x 8	8 x 10	5	10 x 12	5		2 x 6	
	See Note 1											
15 to 20	Up to 6	6 x 8	6 x 8	6 x 8	8 x 8	8 x 8	5	8 x 10	5	3 x 6		
	Up to 6	8 x 8	8 x 8	8 x 8	8 x 8	8 x 10	5	10 x 12	5	3 x 6		
	Up to 6	8 x 10	8 x 10	8 x 10	8 x 10	10 x 10	5	12 x 12	5	3 x 6		
	See Note 1											
Over 20	Excavation plan shall be prepared by a degreed civil/structural engineer and reviewed by CSD											

* Mixed oak or equivalent with a bending strength of not less than 850 psi.

** Timber sizes shown are actual (not nominal) sizes. Manufactured members of equivalent strength may be substituted for wood.

Notes:

1. Maximum spoils height is 0.6 m (2 feet) within a horizontal distance away from the edge of the excavation equal to the depth of the excavation.

2. Member sizes at spacings other than indicated requires an excavation plan to be prepared by a degreed civil/structural engineer and reviewed by CSD.

Timber Excavation Shoring Minimum Timber Requirements*

Depth of Excavation (ft)	Size (Actual) and Spacing of Members **									
	Cross Braces							Stringers		Uprights
	Horizontal Spacing (ft)	Width of Excavation (ft)					Vertical Spacing (ft)	Size (inches)	Vertical Spacing (ft)	Maximum Allowable Horizontal Spacing (ft)
		Up to 4	Up to 6	Up to 9	Up to 12	Up to 15				Close
5 to 10	Up to 6	6 x 8	6 x 8	6 x 8	8 x 8	8 x 8	5	8 x 10	5	2 x 6
	Up to 8	8 x 8	8 x 8	8 x 8	8 x 8	8 x 10	5	10 x12	5	2 x 6
	Up to 10	8 x 10	8 x 10	8 x 10	8 x 10	10x10	5	12x12	5	2 x 6
	See Note 1									
10 to 15	Up to 6	8 x 8	8 x 8	8 x 8	8 x 8	8 x 10	5	10x12	5	2 x 6
	Up to 8	8 x 10	8 x 10	8 x 10	8 x 10	10x10	5	12x12	5	2 x 6
	See Note 1									
15 to 20	Up to 6	8 x 10	8 x 10	8 x 10	8 x 10	10x10	5	12x12	5	3 x 6
	See Note 1									
Over 20	Excavation plan shall be prepared by a degreed civil/structural engineer and reviewed by CSD									

* Mixed oak or equivalent with a bending strength of not less than 850 psi.

** Timber sizes shown are actual (not nominal) sizes. Manufactured members of equivalent strength may be substituted for wood.

Notes:

1. Maximum spoils height is 0.6 m (2 ft) within a horizontal distance away from the edge of the excavation equal to the depth of the excavation.

2. Member sizes at spacings other than indicated requires an excavation plan to be prepared by a degreed civil/structural engineer and reviewed by CSD.

Figure 1.16 Layout of Trenches 1.2 to 2.4 m (4 to 8 ft) Deep

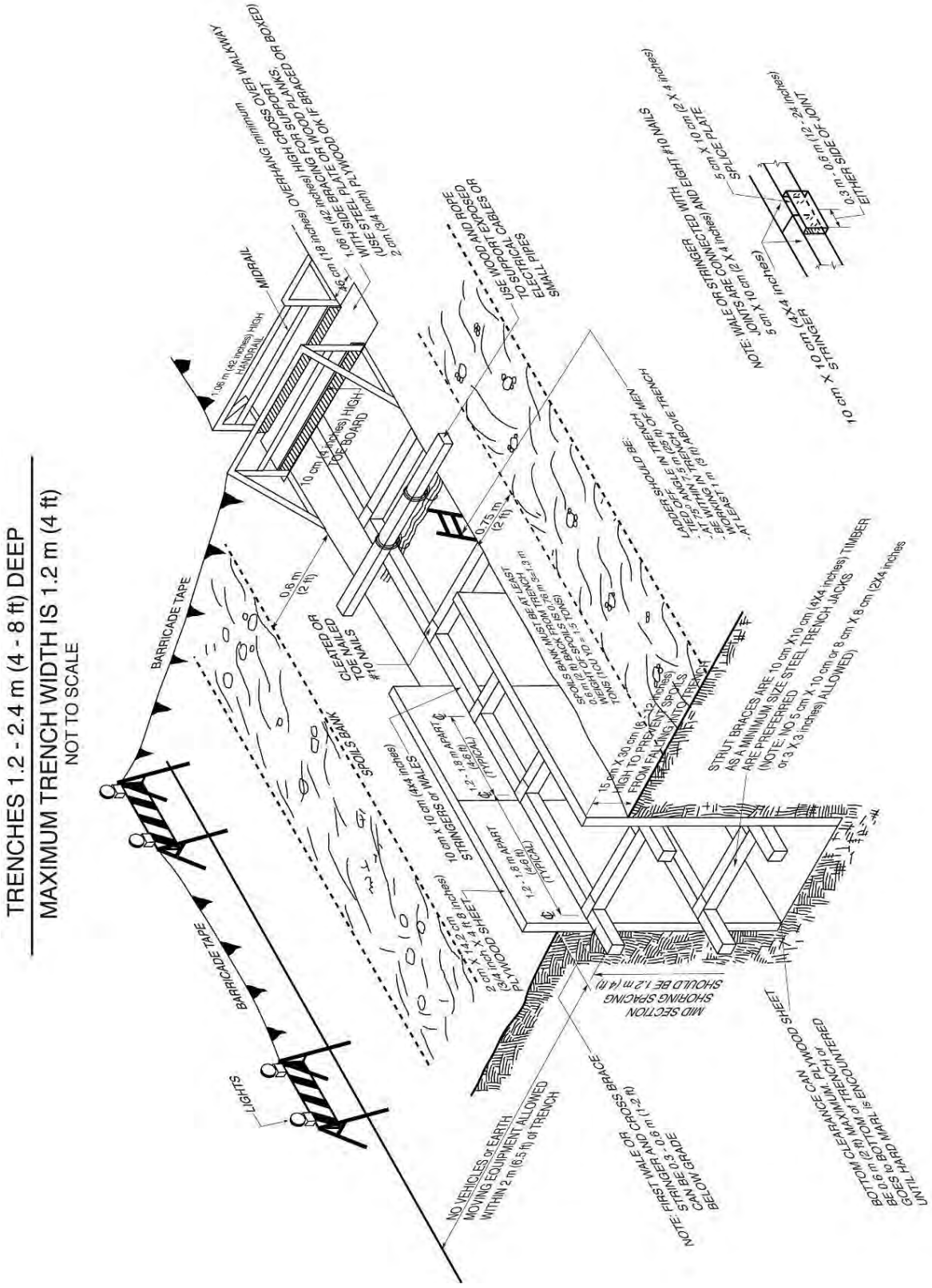

Figure 1.17 Typical Cover Plates for Road Trenches

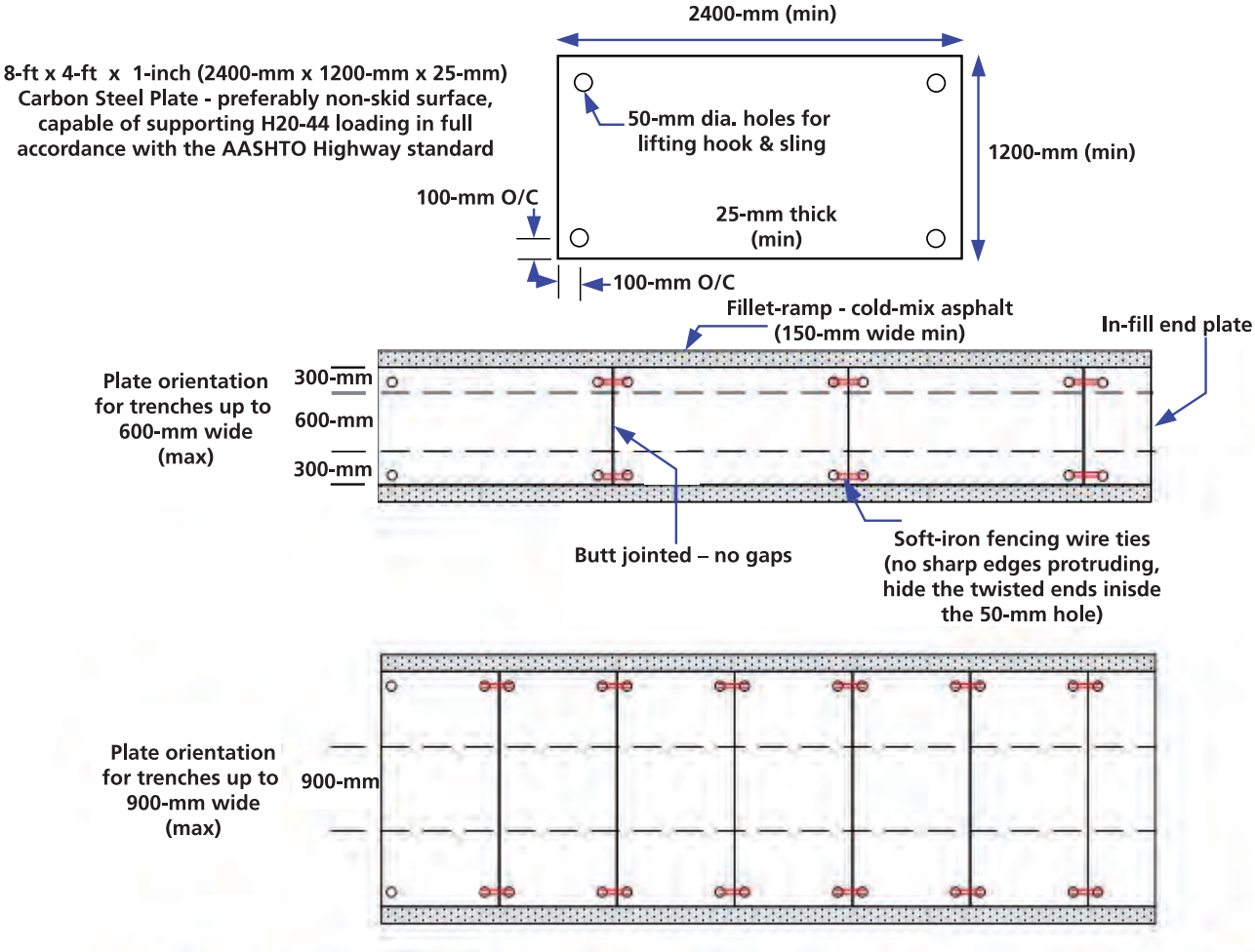

Notes

1. Road surface shall be level, adjust level using cold-mix asphalt as required. Plates shall be fully supported around the perimeter to prevent wobbling or rocking.
2. No protruding edges on the plates No nails or screws. Deflected or damaged plates shall not be used.
3. Minimum 300-mm overlap between the edge of the plate and the edge of the trench.
4. Warning sign "Slow -Ramp Ahead" must be placed 30-meters before the trench on each side of the road.
5. Trenches over 900-mm wide, or > 15-m long, required an engineered design solution.
6. Plate protection for road trenches must be included in the work permit and HIP.
7. The trench shoring shall be in accordance with Section 1.7 of this Chapter.
8. Open road trenches shall have warning lights during darkness hours.
9. All road work shall be in accordance with Saudi Aramco Engineering Standards requirements and road crossings shall be completed in an expeditious manner to minimize duration for use of trench cover plates.

Alternate Plate Jointing Method [temporary welds]

Plate orientation for trenches up to 600-mm wide (max)

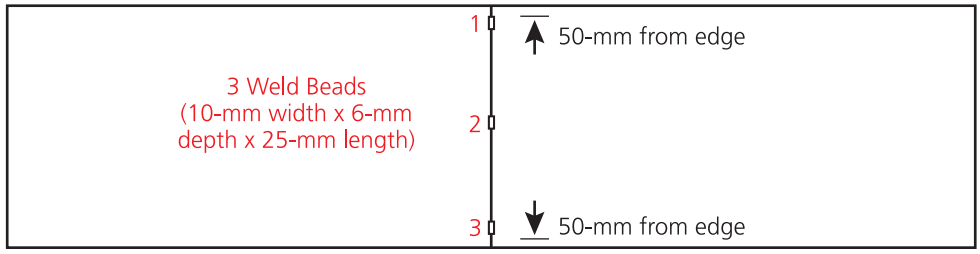

Plate orientation for trenches up to 900-mm wide (max)

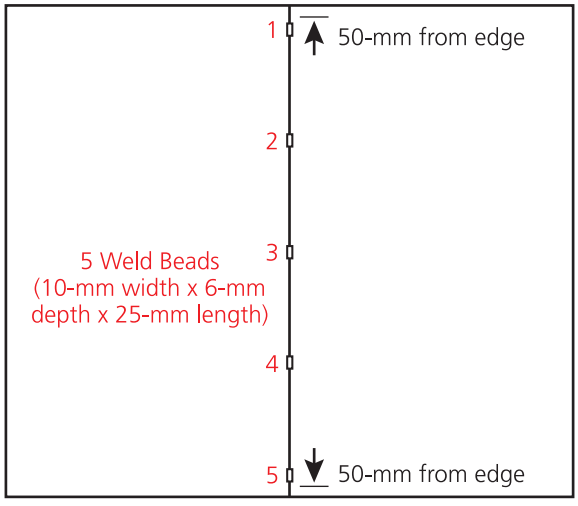

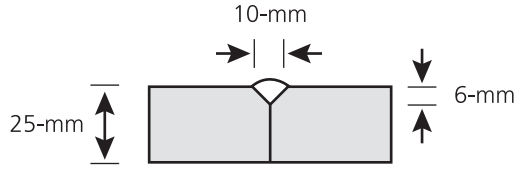

Welded Bead Sectional Detail (10-mm width x 6-mm depth x 25-mm length)

8-ft x 4-ft x 1-inch (2400-mm x 1200-mm x 25-mm) Carbon Steel Plate - preferably non-skid surface, capable of supporting H20-44 loading in full accordance with the AASHTO Highway standard

Road Trench
Flush Fitting Option
[wire ties or temporary welds]

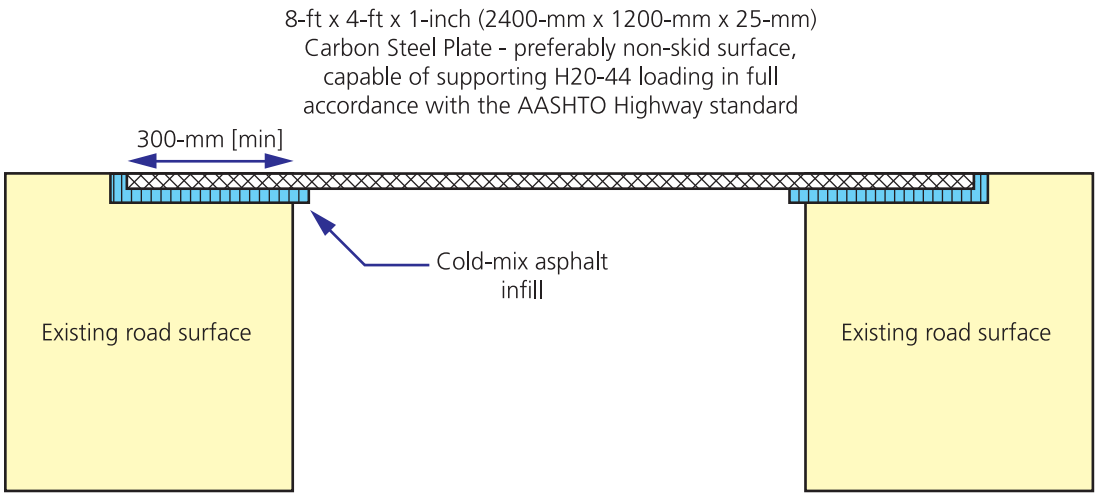

Road Trench
Surface Installation
[wire ties or temporary welds]

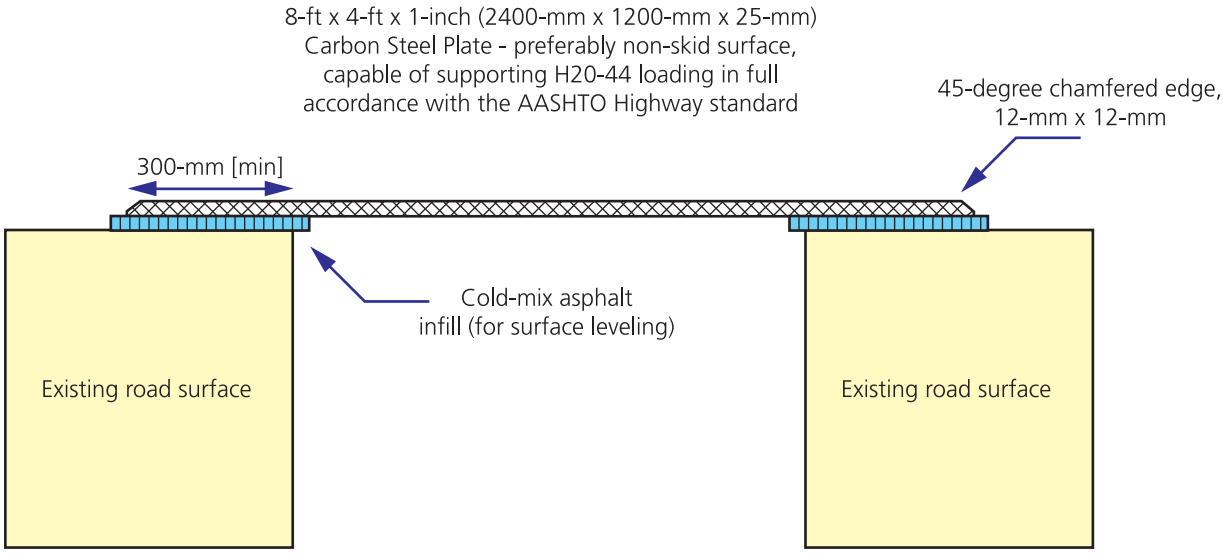

Figure 1.21 Typical Sidewalk Trench Protection



8-ft x 4-ft x ¾-inch (2400-mm x 1200-mm x 20-mm)
Shuttering or Shoring Plywood - non-skid surface

Non-Barricaded
Open Trench

Protection for open trenches up to 900-mm wide (max), in a sidewalk without barricades

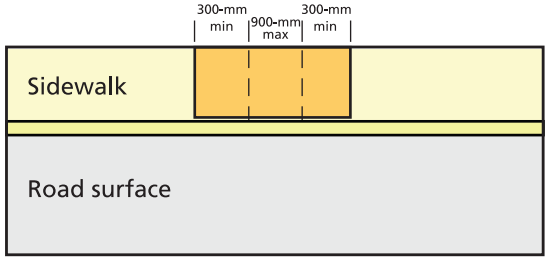

Barricaded
Open Trench

Protection for open trenches any width in a sidewalk with barricades

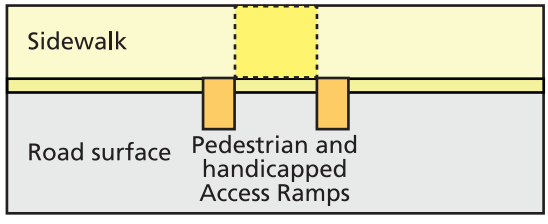

Pedestrian and Handicapped
Access Ramp

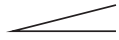

30˚ slope (max)



¾-inch thick (20-mm)
Shuttering or Shoring Plywood, non-skid surface, nailed construction with 2-inch (50-mm) x 2-inch (50-mm) frame, 31-inches (800-mm) wide minimum.

The pedestrian and handicapped access ramp shall be protected with traffic cones placed at 2-ft (600-mm) intervals on the road aligned to the length of the ramp, to a distance of 30-ft (10-m) either side.

1. Secure plywood by masonry nails or screws to the concrete or asphalt substrate, no protruding heads.

2. Minimum 300-mm overlap between the edge of the plywood and the edge of the sidewalk trench.

3. Open sidewalk trenches shall have warning lights during darkness hours.

4. Sidewalk trenches over 900-mm wide, or > 15-m long, require an engineered design solution.

5. Plywood protection for sidewalk trenches must be included in the work permit and HIP.

6. The trench shoring shall be in accorrdance with Section 1.7 of this Chapter.

7. Open trenches shall have wooden barricades on all sides,¾-inch thick (20-mm) Shuttering or Shoring Plywood,nailed construction with 2-inch (50-mm) x 2-inch (50-mm) frame, sanded finish (no splinters) and painted.

PRE-EXCAVATION CHECKLIST

PROJECT OR WORK ORDER NUMBER		EXCAVATION LOCATION	

	ACTIONS	REMARKS	DONE	INITIALS
SPONSORING ORGANIZATION (e.g., Project Management,	• Arrange and review excavation drawing	_____	☐	_____
	• Arrange demarcation of excavation site	_____	☐	_____
	• Survey site with proponent operation's rep.	_____	☐	_____
	• Arrange sign-off of this checklist by all parties	_____	☐	_____
	• Provide Work Permit (WP) Issuer's organization with this checklist and excavation drawing	_____ _____	☐ ☐	_____ _____
	• Provide notifications as required			
	SPONSORING ORGANIZATION'S REPRESENTATIVE **(Name, phone, signature & date)** _____			
PROPONENT ENGINEERING/TECHNICAL (specify Division)	• Determine location of underground (U/G) utilities, including contacting Government Affairs if off site	_____	☐	_____
	• Verify operational status and operating condition of U/G utilities	_____ _____	☐ ☐	_____ _____
	• Arrange cable/pipe detection to locate utilities not shown on drawings and unmarked in the field			
	PROPONENT'S ENGINEERING / TECHNICAL SERVICES REPRESENTATIVE **(Name, phone, signature & date)** _____			
PROPONENT OPERATIONS (specify Division)	• Survey site with sponsoring organization's rep.	_____	☐	_____
	• Review excavation drawing	_____ _____	☐ ☐	_____ _____
	• De-energize cables and isolate piping, if possible	_____		_____
	• Advise WP Issuer about precautions required			
	PROPONENT OPERATION'S REPRESENTATIVE **(Name, phone, signature & date)** _____			
ORGANIZATION OF WP RECEIVER (specify)	Review Saudi Aramco's excavation safety requirements and implement applicable measures	_____	☐	_____
	• Double-check area for unknown U/G utilities with cable/metal detector in presence of WP Issuer	_____	☐	_____
	• Provide WP Issuer with this fully signed Pre-Excavation Checklist and excavation drawing	_____	☐	_____
	WORK PERMIT RECEIVER ORGANIZATION'S REPRESENTATIVE **(Name, phone, signature & date)** _____			

EXCAVATION INSPECTION CHECKLIST

Project or WO # _____ Excavation Location _____

This checklist shall be completed and posted on site by the excavation competent person. Inspections shall be performed before workers are initially allowed to enter the excavation, after a change in site conditions (e.g., rain storm, groundwater, sidewall deterioration or adjacent ground fissuring) and daily for excavations greater than 2.4 m (8 ft) deep. At the end of the workday, this checklist shall be given to the contractor's safety supervisor for review and filing. The contractor's safety supervisor shall maintain a consolidated list of all excavations and conduct random inspections of excavations during the course of the workday. All of Saudi Aramco's safety requirements shall be complied with at all times. The excavation competent person shall be knowledgeable of Saudi Aramco's safety requirements and have the necessary training and experience to ensure the work is performed safely.

Depth of excavation: _____ meters / feet	**Width of excavation: _____ meters / feet**

	YES	NO	N/A
Has a Pre-Excavation Checklist been completed prior to digging?			
Have all relevant departments been notified prior to digging?			
Are underground utilities, cables and pipelines located and marked prior to digging?			
Is a work permit required, issued and available on site?			
Is a Confined Space Entry Permit required, issued and available on site?			
Is gas testing required and performed; e.g., excavations deeper than 1.2 m (4 ft)?			
Is a Stand-by Man and/or Fire Watch required and available on site?			
Are pedestrian crossovers required and provided (with guardrails)?			
Is access to plant/process equipment maintained?			
If excavation is near a roadway are flagmen with bright orange vests present?			
Is the shoring/sloping/benching acceptable to prevent sidewall cave-in?			
Is shoring material in sound condition and free of damage/defects?			
Is shoring installed/maintained by qualified personnel?			
Are adequate ladders provided within a travel distance of 7.5 m (25 ft)?			
Are ladders properly secured and do they extend 1 m (3 ft) above the surface?			
Is the excavation free of tension cracks or other evidence of sidewall failure?			
Is the excavation free of water, hydrocarbons, or other toxic substances?			
Are materials and spoils set back at least 0.6 m (2 ft) from the excavation's edge?			
Are underground utilities and piping located, marked and protected from damage?			
Are pedestrian barricades/lights placed at least 1 m (3 ft) from excavation's edge?			
Are hard barricades for vehicles placed at least 2 m (6.5 ft) from excavation's edge?			
Are cranes not closer than the depth of excavation to the edge of the excavation?			
Are scaffolds erected no closer than 1.5 times the depth of excavation from its edge?			
Are overall conditions acceptable and safe for work?			

All deficiencies will be corrected immediately.

_____ _____ _____

Competent Person's Signature ***Date*** ***Verified by (Proponent/PMT)***

EXCAVATION SAFETY POCKET CARD

Use this safety inspection pocket card when planning, constructing, entering and/or restoring excavations and trenches over 1.2 m (4 ft) deep or excavations where buried utilities, pipelines, or cables may be present.

PLANNING
Has a Pre-Excavation Checklist been completed & on site?
Have all relevant departments been notified?
Are utilities, cables and pipelines located and marked?
Was an excavation plan (calculations & drawing) prepared by a civil engineer if excavation > 6 m (20 ft) deep?
Has the soil type (see back) been determined by a soil analysis or by a "Competent Person"?
Is a Confined Space Entry Permit required and on site?
CONSTRUCTION
Is only excavating/backfilling equipment allowed within 2 m (6.5 ft) of the excavation and are the following clearances maintained (unless properly designed shoring is used): • Vehicles/cranes/heavy equipment more than the depth of excavation away from excavation (2 m [6.5 ft] min.), • Scaffold posts > 1.5 times depth of excavation away?
Has one or more of the following methods of protection against sidewall cave-in been used and has it been done per the excavation drawing? • Benching • Sloping (see back) • Shoring (including trench shields, etc.)
Are spoil piles placed > 0.6 m (2 ft) away from excavation?
Are pedestrian barricades erected > 1 m (3 ft) away?
Are blinking warning lights installed and used?
Is a documented inspection performed daily by a "Competent Person"?
PERSONNEL ENTRY
Do only authorized personnel enter the excavation?
Is any water in the excavation controlled by pumping?
Are gas tests conducted (e.g., low oxygen, toxic gases)?
Is a ladder or other access available within 7.5 m (25 ft) travel distance (e.g., ladders spaced < 15 m [50 ft] apart)?
Is emergency rescue equipment available?
RESTORATION
Has the work area been restored?
Are the walking surfaces level?

SUMMARY OF SOIL TYPES AND MAXIMUM ALLOWABLE SLOPES

A "Competent Person" is a person properly trained to identify existing and potential hazards, soil conditions, and proper design (i.e., benching, shoring, and sloping).

For sloping when excavation depth < 6 m (20 ft), use the following maximum allowable sidewall slopes for the type of soil, where "d" is the depth of the excavation.

- **Stable Rock** - Natural solid mineral matter that can be excavated with vertical sides, such as sandstone.



- **Type A Soil** - Previously undisturbed cohesive or cemented soil, such as clay or marl.

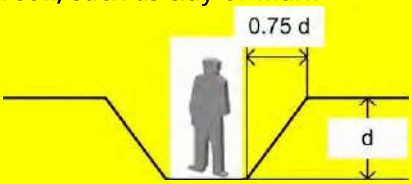

- **Type B Soil** - Less cohesive soil, such as a mix of sand, rocks and clay.



- **Type C Soil** - Least cohesive soil. Examples are: gravel, sand, muddy or freely seeping soils, submerged rock that is not stable or a layered system. Previously disturbed soil is Type C soil.

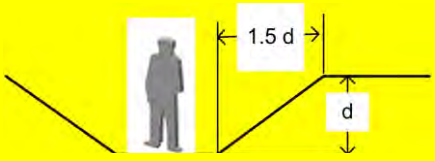

Front **Back**

2. Scaffolding

2.1 Purpose

This chapter describes minimum safety-related *technical* requirements for personnel access scaffolds with fixed platform heights. Saudi Aramco (SA) General Instruction (GI) 8.001 provides minimum *administrative* requirements for the safe design, erection, supervision, inspection, use, tagging, alteration and dismantling of personnel access scaffolds. Scaffolding used for shoring of concrete formwork is covered in Chapter II-6, *Concrete Construction*, of this manual.

2.2 References

SA General Instruction (GI):

GI 8.001, *Safety Requirements for Scaffolds*

Gulf Standard (GS):

GS 217-1994 (or later), *Industrial Safety and Health Regulations – Equipment: Scaffolding*

American National Standards Institute (ANSI)/American Society of Safety Engineers (ASSE):

ANSI/ASSE A10.8, *Safety Requirements for Scaffolding*

American Society for Testing and Materials (ASTM):

ASTM A123, *Standard Specification for Zinc (Hot-Dip Galvanized) Coatings on Iron and Steel Products*

ASTM A370, *Standard Test Methods and Definitions for Mechanical Testing of Steel Products*

ASTM A500*, Standard Specification for Cold-Formed Welded and Seamless Carbon Steel Structural Tubing in Rounds and Shapes*

European Committee for Standardization, European Standard (EN):

EN 39, *Loose Steel Tubes for Tube and Coupler Scaffolds. Technical Delivery Conditions* (Note: This standard superseded British Standard BS 1139, Part 1)

EN 74-1, *Couplers, Spigot Pins and Baseplates for Use in Falsework and Scaffolds. Couplers for Tubes. Requirements and Test Procedures* (Note: This standard superseded British Standard BS 1139, Part 2)

EN ISO 8492, *Metallic Materials – Tube – Flattening Test*

Saudi Aramco: Company General Use

EN 10002-1, *Metallic Materials — Tensile Testing — Part 1: Method of Test at Ambient Temperature*

EN 10021, *General Technical Delivery Conditions for Steel Products*

EN 10219-1, *Cold Formed Welded Structural Hollow Sections of Non-Alloy and Fine Grain Structural Steels — Part 1. Technical Delivery Conditions*

EN 10219-2, *Cold Formed Welded Structural Hollow Sections of Non-Alloy and Fine Grain Structural Steels — Part 2. Tolerances, Dimensions and Sectional Properties*

EN 10240, *Internal and/or External Protective Coatings for Steel Tubes — Specification for Hot Dip Galvanized Coatings Applied in Automatic Plants*

EN 12811-1, *Temporary Works Equipment — Part 1: Scaffolds — Performance Requirements and General Design*

EN 12811-2, *Temporary Works Equipment — Part 2: Information on Materials*

EN 12811-3, *Temporary Works Equipment — Part 3: Load Testing*

National Access and Scaffolding Confederation (NASC):

NASC SG4:05, *Preventing Falls in Scaffolding and Falsework*

NASC SG4:You, *User Guide to SG4:05*

U.S. Code of Federal Regulations (CFR):

29 CFR 1926, Subpart L, *Scaffolds*

U.S. Department of Labor, Occupational Safety and Health Administration (OSHA):

OSHA 3150, *A Guide to Scaffold Use in the Construction Industry*

2.3 Scaffold Types

2.3.1 The types of scaffolds covered in this chapter are those commonly used within SA, including tube-and-coupler, system, fabricated tubular frame, bracket, underhung and mobile scaffolds, and they shall be designed, constructed, inspected, tagged and used per GI 8.001.

2.3.2 The following unusual scaffolds are not covered in this chapter (see GS 217 or 29 CFR 1926.450 for definitions):

A. Adjustable and nonadjustable suspension scaffolds (sky climbers, swinging scaffolds, etc.).

B. Boatswain's chairs.

Saudi Aramco: Company General Use

C. Bricklayers' square scaffolds.

D. Carpenters' bracket scaffolds.

E. Centenary scaffolds.

F. Chimney hoists.

G. Float (ship) scaffolds.

H. Form scaffolds.

I. Horse scaffolds.

J. Ladder jack scaffolds.

K. Lean-to scaffolds.

L. Outrigger scaffolds.

M. Pump jack scaffolds.

N. Repair bracket scaffolds.

O. Roof bracket scaffolds.

P. Shore scaffolds.

Q. Single-pole scaffolds.

R. Step, platform and trestle ladder scaffolds.

S. Top plate bracket scaffolds.

T. Window jack scaffolds.

2.3.3 The construction of any of the above unusual types of scaffolds shall conform with the requirements of 29 CFR 1926 Subpart L (refer to ANSI A10.8 and GS 217 for additional information). Per these standards, use of shore and lean-to scaffolds is prohibited.

2.4 Scaffold Components

2.4.1 General

A. The components used to assemble a scaffold shall be inspected before each use and shall conform to requirements of this chapter.

B. Scaffold components from different manufacturers shall not be intermixed unless the components are compatible (e.g., fit together without mechanical force) and the scaffold's structural integrity is maintained. Scaffold

Saudi Aramco: Company General Use

components manufactured by different manufacturers shall not be modified in order to intermix them. See Section 2.7 for requirements concerning intermixing of system scaffolding.

C. Scaffold components shall be free from harmful or damaging corrosion.

D. Scaffold components that are obviously damaged, excessively corroded, defective or do not meet the applicable codes and standards shall be marked with bright fluorescent orange paint and immediately removed from the SA property or project site (see Figures 2.1 and 2.2). Defective couplers shall be immediately destroyed and shall not be reused on any SA property or job site. However, if possible, defective sections of planks or tubing may be cut off (see Section 2.4.3 G). In this case, the plank or tubing may be reused.

E. Scaffold components made of dissimilar metals shall not be used together (e.g., aluminum ladders shall not be used on scaffolds constructed of steel tubing).

F. Scaffold components shall not be exposed to acids or other corrosive substances unless adequate precautions have been taken to protect the component from damage.

G. Scaffold components shall be properly stored to prevent damage.

2.4.2 Scaffold Tubing and Fittings Specifications

A. Scaffold tubing shall be 48.3 mm (1.9 in) nominal outside diameter.

B. Scaffold tubing (e.g., for tube-and-coupler, system and fabricated tubular frame scaffolds) shall be welded or seamless structural steel pipe, suitable for hot-dip galvanizing and fabricated in accordance with any of the following pipe fabrication specifications and as specified in this section:

- ASTM A500, Grade B; 290 N/mm^2 (42 ksi) minimum yield stress; 3.4 mm (0.13 in) or 3.76 mm (0.15 in) nominal wall thickness.
- EN 39 thickness type 4; 235 N/mm^2 (34 ksi) minimum yield stress; 4.0 mm (0.16 in) nominal wall thickness (Note: BS 1139 tubing is equivalent and is acceptable).
- EN 10219; 320 N/mm2 (46 ksi) minimum yield stress; 3.2 mm (0.125 in) nominal wall thickness.
- EN 10219; 460 N/mm2 (67 ksi) minimum yield stress; 2.9 mm (0.114 in) nominal wall thickness

  Note: Even though EN 39 thickness type 3 tubing has a 3.2 mm (0.125 in) wall thickness, it is **not** equivalent and its use is prohibited (even if it is embossed/stamped) within SA since its minimum specified yield stress is only 235 N/mm^2 and not the required 320 N/mm^2.

Saudi Aramco: Company General Use

C. Tubing shall meet the testing and inspection requirements of ASTM A500 or EN 10021, including the flattening test for welded tubing. Percentage elongation after fracture shall be as per the pipe fabrication specification, but not less than 20%.

D. Actual yield strength, tensile strength, percent elongation, etc., shall be verified by the purchaser of scaffold tubing as meeting specifications by: (1) receipt from supplier and review of certified inspection test reports/certificates for each lot of tubing produced from the same heat of steel, and (2) by independent mechanical tensile testing, per ASTM A370 or EN 10002-1, of test specimens taken from two lengths of tubing for each lot of 500 lengths, or fraction thereof, received. Mechanical properties shall meet minimum requirements after galvanizing.

E. All test reports shall be written in English. All relevant inspection and tensile test reports/certificates for tubing shall be immediately made available to SA upon request.

F. Tubing for tube-and-coupler scaffolds shall be clearly, continuously and permanently marked (embossed) to distinguish it from unacceptable, substandard tubing. Tubing shall be marked prior to galvanizing with the pipe manufacturer's name or logo and applicable pipe fabrication specification (including Grade/minimum yield strength and nominal wall thickness) continuously along its full length, in a position remote from any electric resistance weld seam, using a low-stress rolling die embossed marking system. The marking interval shall not exceed 1.5 m (5 ft), with characters a minimum of 4 mm (0.16 in) high and impression depth of at least 0.2 mm (0.008 in) deep. Painted markings are not acceptable.

G. Scaffold tubing conforming to other specifications may be used only if approved beforehand by the SA Consulting Services Department (CSD) and if inspected and permanently marked as stated previously.

H. Steel tubing for tube-and-coupler scaffolds shall be hot-dip galvanized (not painted) in accordance with ASTM A123 or EN 10240 (coating quality B.2). Steel tubing for system and fabricated tubular frame scaffolds may be painted.

I. Scaffold couplers shall be marked as conforming to EN 74 or an SA-approved equivalent specification (this includes girder couplers). Couplers may be either the pressed or drop-forged type.

J. All fittings (e.g., couplers, clamps, joint pins) shall be galvanized or zinc coated to resist corrosion. All relevant test reports/certificates for couplers shall be made available to SA immediately upon request.

K. Threaded parts of scaffold components and fittings shall be capable of attaining full thread engagement and shall be lubricated regularly.

L. Scaffold components and fittings shall be installed per the manufacturer's instructions.

Saudi Aramco: Company General Use

M. Girder couplers (See Figure 2.3) shall be used in pairs and shall be clamped on opposite sides of the structural section.

N. Individual couplers shall comply with the rated safe working loads (SWL) shown in Table 2.1. This shall be verified from the technical literature submitted by the manufacturer, as well as by independent sample testing.

O. Applied *gravity* loads (unfactored) shall be less than 40% of the rated SWL shown in Table 2.1 to ensure a safety factor of four. See Section 2.5.1. For wind loads in braces, the rated SWL shown in Table 2.1 may be used.

Table 2.1 Safe Working Loads (SWL) for Couplers

Type of Coupler	**Type of Load**	**EN 74 Class**	**Rated SWL***
Right-angle coupler, also known as double or load-bearing coupler (See Figure 2.4)	Slip along a tube	B	9.4 kN (2,100 lb)
Adjustable coupler, also known as swivel coupler (See Figure 2.5)	Slip along a tube	A B	5.3 kN (1,190 lb) 9.4 kN (2,100 lb)
End-to-end coupler, also known as sleeve coupler (See Figure 2.6)	Tension bending	B B	3.0 kN (675 lb) 0.59 kN/m (435 lb/ft)
Bearer coupler, also known as putlog or single coupler (See Figure 2.7)	Force to pull the tube axially out of the coupler	-	0.53 kN (120 lb)
Joint pin (See Figure 2.8)	Tension	-	0 kN (0 lb)

* Note: The rated SWL shown is based on a slipping safety factor of only 1.6.

2.4.3 Platform Units

A. Scaffold platform units shall be solid sawn wood planks, laminated veneer lumber (LVL) planks, fabricated planks or fabricated platforms. See Figure 2.9. All recommendations by the platform unit manufacturer or the lumber grading association or inspection agency shall be followed.

B. Solid sawn wood planks shall be of solid sawn timber and shall be 2 x 10 inches (nominal), 2 x 9 inches (rough), 38 mm x 225 mm (basic) or 50 mm x 225 mm (basic).

C. Solid sawn wood scaffold planks shall be a “scaffold plank” grade and shall be certified by and bear the grade stamp of the West Coast Lumber Inspection Bureau (WCLIB), Southern Pine Inspection Bureau (SPIB) or other lumber-grading agency approved by the American Lumber Standards

Saudi Aramco: Company General Use

Committee (see Certified Agencies and Typical Grade Stamps, published by the American Lumber Standards Committee).

D. LVL scaffold planks shall meet the following requirements:

- LVL planks shall measure at least 38 mm (1 1/2 inches) thick and at least 225 mm (9 inches) wide.
- Each LVL scaffold plank shall be permanently stamped or embossed along at least one edge with the following: (1) registered product mark or brand that, in conjunction with a published specification, clearly identifies the allowable LVL plank span; (2) name or mark of the Product Certification body; (3) the words "PROOF TESTED," "SCAFFOLD PLANK" and "OSHA;" and (4) month and year of manufacture.
- LVL scaffold planks shall have an allowable span at least 1.8 m (6 ft) for the three-man concentrated load case shown in Figure 2.10. Allowable spans for the other concentrated load cases in Figure 2.10 shall also be provided by the manufacturer. Allowable spans shall be determined in accordance with 29 CFR (OSHA) 1926.451 and 29 CFR 1926, Subpart L, Appendix A.
- The allowable span for each concentrated load case shall be calculated for dry-use, single-span application using allowable strength properties determined in accordance with the requirements of ANSI/ASSE A10.8, Appendix C, *Calculation of Allowable Stress for Wood Scaffold Planks*, and the design deflection not exceeding 1/60 of the span. Calculations shall use section properties based on the net cross-section taking into account specified tolerances.
- In addition to other quality-verification procedures normally used by the manufacturer, LVL scaffold planks shall be individually proof-tested and their rigidity monitored to verify the strength and rigidity claimed as the basis for determination of allowable spans. Test procedures and acceptance criteria shall be approved by the quality certification body or grading/inspection agency and shall form part of the basis for product certification.
- LVL scaffold planks shall be quality certified by an independent third-party product certification grading or inspection agency as suitable for use as a scaffold plank in exterior (wet use), weather-exposed applications and for compliance with the requirements in this chapter.

E. Relevant test reports, certificates, etc., for planks shall be immediately made available to SA upon request.

F. Scaffold planks shall conform to the following (see Figure 2.11):

- Plank ends shall not be split more than 25 mm (1 in) without metal banding. Even with banding, plank ends shall not be split over 300 mm (12 in).

Saudi Aramco: Company General Use

- Planks shall not be twisted from end-to-end or curled from side-to-side more than 13 mm (1/2 in).

G. Planks shall be inspected for defects, including damage, decay and warping, prior to each use. Planks that are split, warped, twisted (more than allowed in Section 2.4.3 F), saw-cut, drilled, worn, decayed, broken or damaged shall not be used. See Figure 2.2. However, the defective parts may be cut off to produce shorter planks. In this case, the cut end(s) of solid sawn planks shall be banded.

H. Planks shall not be painted, treated or coated in any way (except at the ends/edges).

I. Planks shall not be stood on end unattended.

J. Planks shall be properly stacked, off the ground and on a suitable foundation. Where the height of a stack exceeds 20 planks, steps shall be taken to tie or bond succeeding layers.

K. Scaffold planks shall not be used as concrete forms, excavation shoring or as sills for scaffolds.

2.5 Requirements Common to All Scaffolds

2.5.1 Capacity

A. Every access scaffold and scaffold component shall be capable of supporting, without failure, its own weight (dead load) and at least four times the maximum intended load (live load) applied or transmitted to it (i.e., D+4L). Self weight of platform units (including planks) may be considered as dead load.

B. Posts (standards) shall be capable of supporting, without failure, four times all gravity loads (i.e., 4D+4L).

C. The latest SA Scaffolding Structural Design Criteria (available from the SA Loss Prevention Department, Technical Services Unit) shall be used for structural design of scaffolds.

D. Scaffolds shall have a specified load rating, corresponding to the maximum intended load, of light-duty, medium-duty or special-duty. For design, the live load shall be taken as the scaffold's load rating.

E. Light-duty scaffolds shall be designed and rated for 120 kg/m^2 (1.2 N/m^2) (25 lb/ft^2 [psf]). Medium-duty scaffolds shall be designed and rated for 240 kg/m^2 (2.4 N/m^2) (50 psf). See Figures 2.12 and 2.13. Special-duty scaffolds are designed and rated for more than 240 kg/m^2 (2.4 N/m^2) (50 psf).

Saudi Aramco: Company General Use

F. Scaffolds and scaffold components shall not be loaded in excess of their load rating, which shall be noted on the scaffold tag. See GI 8.001.

G. The maximum allowable span for fabricated metal planks and fabricated metal platforms shall be determined by the manufacturer and shall be the shortest simple span required to support, without failure, the platform unit's own weight and at least four times the one-man and two-man concentrated load cases shown in Figure 2.10.

H. The maximum span for fabricated planks and fabricated platforms shall also not be less than what is required to support, without failure, the platform unit's own weight and at least four times the light-duty, medium-duty or special-duty uniformly distributed load, as applicable given the scaffold's load rating. These uniformly distributed loads and the concentrated loads in Figure 2.10 are not additive (cumulative).

I. The maximum deflection for all types of platform units (including fabricated planks, solid sawn wood planks and LVL planks) shall not exceed 1/60 of the span length when supporting any of the (unfactored) concentrated load cases in Figure 2.10 or the (unfactored) light-duty, medium-duty or special-duty uniformly distributed load, excluding the platform unit's self-weight.

2.5.2 Foundations

A. Scaffold foundations shall be sound, rigid and capable of carrying the scaffold's self-weight plus the maximum intended (live) load without settling or displacement. Unstable objects such as barrels, boxes, loose bricks or concrete blocks shall not be used to support scaffolds, planks or timber sills. See Figure 2.14.

B. The ground or floor on which a scaffold stands shall be carefully examined for its load-bearing capacity. Sand or made-up ground (fill) may need compacting to ensure there are no cavities. Bases such as floors, roofs, etc., may need shoring from underneath.

C. Timber sills (sole boards) at least 225 mm (9 in) wide by 38 mm (1 1/2 in) thick shall be used to spread the load on sand, made-up ground, asphalt pavement, wooden floors and other soft or slippery surfaces. See Figure 2.15. Timber sills shall also be used where base plates may be exposed to corrosive materials. Scaffold planks shall not be used as sills.

D. The ground beneath sills shall be level and compact. A sill shall extend under at least two posts (standards), unless that is not feasible because of uneven or sloping ground. In this case, sills under individual posts (standards) shall be at least 765 mm (30 in) long.

E. All scaffold posts (standards) shall be pitched on steel base plates at least 150 mm (6 in) x 150 mm (6 in) and 6 mm (1/4 in) thick. See Figures 2.16 and 2.17. For "special scaffolds," the base plates shall be designed to safely support the maximum scaffold post (standard) load.

Saudi Aramco: Company General Use

F. Screwjacks shall be used to compensate for variations in ground level. Screwjacks shall not be adjusted to more than 2/3 of the total length of the threaded section. See Figures 2.18 and 2.19. Screwjacks shall be used and loaded in accordance with the manufacturer's specifications.

G. Front-end loaders, forklifts or other heavy equipment shall not be used to support scaffolds.

H. Scaffolds and scaffold planks shall not be hung from, or supported by, guardrails or handrails.

I. Cranes or other lifting devices shall not lift any scaffold, unless it is classified as a "special scaffold" that is specifically designed to be lifted and the scaffold plan was reviewed in accordance with GI 8.001.

2.5.3 Fall Protection for Scaffold Craftsmen

A. Scaffold craftsmen shall continuously wear a full-body harness with shock-absorbing lanyard while erecting, altering or dismantling a scaffold. See Chapter II-5, *Fall Protection*, of this manual.

B. Scaffold craftsmen shall properly anchor their lanyard whenever they are not protected by a guardrail system and could fall more than 1.8 m (6 ft). The lanyards shall be anchored to the scaffold only if it is not possible to anchor to a stronger anchorage (including a lifeline).

C. NASC SG4:05 and NASC SG4:You shall be used to establish and implement proper fall protection methods for scaffold craftsmen.

2.5.4 Guardrail Systems

A. Guardrail systems (consisting of toprails, midrails and support uprights) shall be installed on all open sides and ends of scaffold platforms and stair/ladder landings where personnel could fall 1.8 m (6 ft) or more.

B. The top edge height of toprails shall not be less than 0.95 m (38 in) and not more than 1.15 m (45 in) above the walking/working surface of a platform. See Figure 2.20.

C. Midrails shall be installed approximately halfway between the walking/working surface and the toprail.

D. Toprails and midrails shall be securely fixed to the inside of vertical uprights (i.e., posts). Vertical uprights supporting guardrails shall not be spaced more than 2.5 m (8.2 ft) apart, unless otherwise permitted for a specific system scaffolding as noted in the manufacturer's published instructions.

E. Guardrail systems, including for system scaffolding, shall be able to withstand, without failure, a force of at least 90 kg (200 lb) applied in any

Saudi Aramco: Company General Use

downward or horizontal direction at any point on the toprail or equivalent member.

F. The ends of horizontal guardrails shall not overhang the end uprights, except when the overhang does not constitute a projection hazard to personnel.

G. Holes or gaps in scaffold platforms and stair/ladder landings shall have a guardrail system erected around them or they shall be securely covered with structurally substantial material.

H. Whenever the horizontal distance from the edge of a scaffold platform or landing to the face of the wall or structure exceeds 360 mm (14 in), a complete guardrail system shall be erected along the edge or personal fall arrest systems shall be used.

I. Guardrail systems shall be completely installed before a scaffold platform or stair/ladder landing is used by personnel other than the scaffold craftsmen.

J. If interferences prohibit installation of a complete guardrail system, the scaffold shall be tagged with a yellow scaffold tag and all users of the scaffold shall wear a properly anchored full-body harness (see GI 8.001).

K. Planks shall not be placed on toprails or midrails.

L. At hoisting areas, a complete guardrail system at least 1.2 m (4 ft) long shall be erected (if possible) on each side of the access point through which material is hoisted. A chain or gate shall be properly secured across the opening between the guardrail sections when hoisting operations are not taking place.

2.5.5 Falling Object Protection

A. Toeboards shall be installed along all edges of scaffold platforms and stair/ladder landings that are more than 1.8 m (6 ft) above a lower level, unless personnel access to the lower level is physically prevented.

B. Toeboards shall conform to the following requirements:

- The vertical distance from the top edge of the toeboard to the level of the walking/working surface shall be at least 100 mm (4 in).
- Wood toeboards shall be at least 25 mm (1 in) thick.
- Toeboards shall be securely fastened in place along the outermost edge(s) of the platform and have not more than 6 mm (1/4 in) clearance above the walking/working surface.
- Toeboards shall be solid and capable of withstanding, without failure, a force of at least 23 kg (50 lb) in any downward or horizontal direction at any point.

Saudi Aramco: Company General Use

- Toeboards shall not be nailed to scaffold planks.

C. Where tools, materials or equipment are piled to a point higher than the top edge of a toeboard, and where there is the danger of objects falling through guardrails and striking personnel or equipment below, a protective screen consisting of a minimum No. 18 gauge wire with a maximum 13 mm (1/2 in) mesh shall be securely fixed to the toeboard, midrail and toprail.

D. In addition to wearing hardhats, additional protection from falling objects may be provided by:

- Barricading the area below where objects can fall and not permitting personnel to enter the hazard area.
- Erecting debris nets, catch platforms or canopy structures.

E. Debris nets, catch platforms or canopy structures shall be strong enough to withstand the impact forces of potential falling objects.

F. Materials shall not be piled, stacked or grouped unless they are stable and self-supporting.

2.5.6 Scaffold Platform Construction and Use

A. If the front edge of a scaffold platform is less than 360 mm (14 in) from the face of the wall or structure, guardrails do not need to be erected along that edge. However, falling object protection shall be provided by covering the gap with planks or by using toeboards, nets, barricades, etc., as described in Section 2.5.5.

B. Scaffold platforms shall be closed planked or decked as fully as possible between the guardrails. (Exception: the requirement to provide full planking or decking does not apply to platforms and walkways currently being erected or used solely by workmen performing scaffold erection or dismantling.)

C. For medium-duty and more heavily loaded scaffolds, at least one board bearer (intermediate transom) shall be used in every bay at each platform level that is constructed using solid sawn wood or LVL planks.

D. The maximum span for solid sawn wood planks and LVL planks with an actual thickness of 38 mm (1 1/2 in) to 42 mm (1 5/8 in) shall not exceed 1.5 m (5 ft). See Figure 2.21. Longer spans allowed by the manufacturer of LVL planks (e.g., 1.8 m) shall be in accordance with Section 2.4.3 and may be used if the same manufacturer's identification mark is clearly visible on each plank. However, the span shall not exceed 1.5 m (5 ft) for planks used in wet applications (e.g., offshore).

E. The maximum span for solid sawn wood planks and LVL planks with an actual thickness of 50 mm (2 in) or more shall not exceed 2.4 m (8 ft). See Figure 2.22. Longer spans allowed by the manufacturer of LVL planks shall be in accordance with Section 2.4.3 and may be used if the same

Saudi Aramco: Company General Use

manufacturer's identification mark is clearly visible on each plank. However, the span shall not exceed 1.5 m (5 ft) for planks used in wet applications (e.g., offshore).

F. Planks shall be secured at both ends to prevent vertical and horizontal movement by using fiber rope or wire lashing, clamped toeboards or other equivalent means. See Figure 2.23. This is especially important for planks less than 1.8 m (6 ft) long.

G. Ends of planks shall extend beyond the centerline of their end support bearer (transom) by at least 150 mm (6 in), unless cleated or otherwise restrained by equivalent means. See Figure 2.24.

H. Ends of planks shall not extend more than 300 mm (12 in) beyond the centerline of their end support bearer (transom). See Figure 2.24.

I. Plank overlaps shall occur only over supports (i.e., bearers or board bearers). Planks' lap lengths shall not be less than 300 mm (12 in). Planks shall not be nailed together. See Figure 2.24.

J. Planks shall be laid flush side-by-side to each other on all scaffold platforms and stair/ladder landings.

K. On platforms where scaffold planks are placed end-to-end, each end shall be independently supported (Exception: this provision does not preclude use of common support members, such as "T" sections, to support abutting planks or hook-on fabricated metal platforms designed to rest on a common support).

L. At all points of a scaffold where the planks change direction, such as turning a corner, any planks that rest on a bearer (transom) at an angle other than a right angle shall be laid first, and planks which rest at right angles over the same bearer (transom) shall be laid second, on top of the first plank.

M. Each platform unit (scaffold plank, fabricated plank, fabricated deck or fabricated platform) shall be installed so that gaps between platform units are less than 25 mm (1 in) wide. When a larger gap is unavoidable, it shall be covered as follows:

- Gaps more than 25 mm (1 in) wide but less than 50 mm (2 in) wide (e.g., the gap between planks caused by the inside vertical posts/standards passing through the platform) shall be covered with properly secured plywood strips or equivalent (e.g., "Uniq-Scaffgap" plastic strips) whenever there is a potential for objects falling through these gaps and striking personnel or equipment below.
- Gaps more than 50 mm (2 in) wide but less than 600 mm (2 ft) wide shall be covered with at least 20 mm (3/4 in) thick exterior grade plywood sheets. Such plywood coverings shall be overlapped at least the width of the gap, 300 mm (12 in) minimum, on both sides of the opening and held in place with cleats.

Saudi Aramco: Company General Use

- Gaps larger than 600 mm (2 ft) in width shall be covered with properly secured (not nailed) cross planks.

N. Platforms shall be kept free of obstructions, unnecessary materials, projecting nails and other unnecessary tripping hazards (including uneven decking). Adequate space for workers to safely pass shall be provided and maintained wherever materials are placed on platforms.

O. Platform units that have become slippery with oil, sand or any other substance shall be cleaned, or otherwise removed and replaced, prior to continuing use.

P. Scaffold platforms and landings shall be level. Walkways or ramps (e.g., connecting scaffold platforms) shall not exceed a slope of one vertical to three horizontal units. Walkways or ramps steeper than one vertical to eight horizontal shall be equipped with cleats. See Chapter II-4, *Temporary Walking and Working Surfaces*, of this manual for additional requirements for walkways and ramps.

Q. Scaffold platforms, landings, and walkways shall be at least 675 mm (27 in) (3 planks) wide, including during scaffold erection, dismantling and alteration.

R. Precautions (such as covering planks with fire retardant blankets) shall be taken to prevent wood planks from coming into contact with welding slag or open flames. Whenever a scaffold is to be erected near a heat source (such as a heater) or process equipment containing hydrocarbon material above its autoignition temperature, use of a system scaffold with compatible fabricated metal planks is preferred, instead of using combustible wood planks.

S. The next lift shall been completely installed and braced prior to moving platform units up to that level.

T. Scaffold materials shall not be thrown or dropped from heights.

U. Safe landings shall be provided at the top of all ladders and at least every 9 m (30 ft) of ladder height. Landings shall be closed planked and protected by a guardrail system. See Figure 2.25.

V. If an internal ladder is used, the access opening in a landing or platform through which the ladder passes shall be at least 675 mm (27 in) (3 planks) wide and not less than 900 mm (36 in) deep. See Figures 2.26 and 2.27. Access openings through working platforms shall be protected by a sturdy guardrail system with a self-closing drop bar (at toprail height). Or, a hinged cover (trapdoor) may be used. Such covers shall be kept closed at all times, except when personnel are passing through.

W. If an external ladder is used, a step-through opening in the guardrail system (protected by a self-closing drop bar at toprail height) is preferred, instead of personnel having to climb over or through the guardrails. See Figure

Saudi Aramco: Company General Use

2.28. The width of step-through openings in a guardrail system shall not be less than 675 mm (27 in) or more than 760 mm (30 in).

X. Portable ladders shall not be used on top of scaffold platforms.

2.5.7 Entry and Exit

A. When scaffold platforms are more than 0.6 m (2 ft) above or below a point of access, portable ladders, hook-on ladders, attachable ladders, stair towers/stairways, ramps, walkways, integral prefabricated scaffold access or direct access from another platform shall be used. See Chapter II-3, *Ladders and Stepladders*, and Chapter II-4, *Temporary Walking and Working Surfaces*, of this manual.

B. The maximum horizontal travel distance on a scaffold platform to the nearest exit (e.g., ladder) shall not exceed 15 m (50 ft).

C. The minimum clear headroom above scaffold platforms and landings shall be 1.8 m (6 ft).

D. Climbing of scaffold braces, runners, etc., is not permitted, except as required by scaffold craftsmen during scaffold erection, alteration and dismantling.

2.5.8 Stability

A. Scaffold posts and frames shall be erected and maintained vertical and plumb, and shall be vertically braced in both directions to prevent swaying and displacement. Plumbness shall be checked using a spirit level, plumb bob or by using vertical lines on an adjacent building or structure. See Figures 2.29 and 2.30.

B. Where uplift or tension loads may occur in posts (standards) or frames (such as the back side of cantilevered scaffolds), the posts or frames shall be locked together by pins (not joint pins), bolted or pinned spigots, end-to-end (sleeve) couplers or equivalent means capable of carrying the tension loads.

C. Nonmovable supported scaffolds with a height to the uppermost planked level that is more than four times the minimum base dimension (i.e., more than a 4:1 height-to-width ratio) shall be restrained from tipping by ties, outrigger frames or equivalent means. Upper section(s) of a stepped scaffold shall not have a height more than four times the width of the scaffold at the base of that section, unless ties are properly installed to ensure stability (see Figure 2.31).

D. Ties shall be installed as follows:

- Ties shall be connected to buildings or structures, which are capable of supporting the applied (unfactored) loads, by connecting a tie tube to at least two posts (standards) or two horizontal members (e.g., runners)

Saudi Aramco: Company General Use

and coupling this to a two-way tie (see Figure 2.32), column box tie (see Figure 2.33), reveal tie (see Figure 2.34) or an equivalent connection (see Figure 2.35).

- Ties shall be installed according to the scaffold manufacturer's recommendations.
- Tie connections shall be made with right-angle (double) couplers.
- Tie tubes shall be installed at locations where runners (ledgers) and bearers (transoms) support the post (standard) in both directions. Tie tubes shall be connected to posts as close as possible to the horizontal members, or connected to horizontal members as close as possible to the posts. See Figure 2.35.
- Ties shall be installed adjacent to transverse vertical bracing. See Figure 2.36.
- The lowest level of ties shall be installed at the lift located closest to the height of four times the minimum base dimension (4:1 ratio). See Figure 2.36.
- The uppermost level of ties shall be installed as close as feasible to the top of the scaffold.
- Ties shall be spaced vertically every 8 m (26 ft) (4 lifts) or less.
- Ties shall be installed at both ends of the scaffold and at horizontal intervals not to exceed 9 m (30 ft) measured from one end toward the other. See Figure 2.36.

E. When used, reveal tubes shall be securely wedged using reveal pins (see Figure 2.37) between opposing surfaces on the building or structure and coupled to tie tubes. To ensure the security of reveal tubes, it is necessary to frequently check for tightness. Ties to reveal tubes shall not exceed 50% of the total number of ties used on the scaffold and shall be evenly distributed over the area of the face of the scaffold.

F. When used, outrigger frames shall extend the base dimension(s) to more than 1/4 of the scaffold height.

G. The stability of a scaffold may be achieved by the use of rakers (see Figure 2.38) only if it is impractical to provide ties or outrigger frames.

- Each raker shall be a single piece of scaffold tubing not more than 6.4 m (21 ft) in length.
- Rakers shall not be joined (spliced) together.
- The raker angle above horizontal shall not be greater than 75 degrees (4:1) or less than 65 degrees (2:1).
- Only one additional lift may be installed on the scaffold above the raker tie-in point.
- The top of the raker shall be coupled to the scaffold no higher than the third lift.

Saudi Aramco: Company General Use

- The bottom of the raker shall be coupled to a firmly anchored ground stake or otherwise well anchored against movement in all directions (including uplift).
- In addition, the bottom and midpoint of every raker shall always be tied back to the scaffold by horizontal tubes coupled to the raker and to at least two scaffold posts (standards). See Figure 2.38.

H. Ties or outriggers shall be used to prevent tipping of base-supported scaffolds in all circumstances where an eccentric load, such as a cantilevered work platform, is applied or is transmitted to the scaffold.

I. The eccentric effects of an access (e.g., ladder) that is external to the working platform and outside the scaffold structure shall be properly addressed to ensure stability of the scaffold.

J. Connections on a scaffold lift shall be made secure and fully tightened before assembly of the next lift.

K. When a scaffold is being dismantled, the components above each tie shall be dismantled or removed before the tie is removed. Stability shall be maintained while the scaffold is being dismantled.

L. For scaffolds enclosed with tarps or plastic sheets, a degreed structural engineer shall design the scaffold (including tie spacings and configuration) for the increased wind loading.

2.5.9 Clearances

A. Bases of scaffolds shall be at least 1.5 times the depth of excavation away from the edge of the excavation, unless adequate measures are taken to prevent the collapse of the excavation and ensure the integrity of the scaffold foundation. See Chapter II-1, *Excavations and Shoring*.

B. Scaffolds shall not be erected, used, dismantled, altered or moved such that they or any conductive material handled on them (e.g., scaffold tubes) might come closer to exposed and energized power lines than listed in Table 2.2.

Saudi Aramco: Company General Use

Table 2.2 Clearances Between Scaffolds and Power-Lines

Insulated Lines		
Voltage	Minimum Distance	Alternatives
Less than 300 V	1 m (3 ft)	2 times the length of the line insulator, but never less than 3 m (10 ft)
300 V to 50 kV	3 m (10 ft)	
More than 50 kV	3 m (10 ft) plus 10 mm (0.4 in) for each 1 kV over 50 kV	
Uninsulated Lines		
Voltage	Minimum Distance	Alternatives
Less than 50 kV	3 m (10 ft)	2 times the length of the line insulator, but never less than 3 m (10 ft)
More than 50 kV	3 m (10 ft) plus 10 mm (0.4 in) for each 1 kV over 50 kV	

Reference: OSHA 3150, *A Guide to Scaffold Use in the Construction Industry*

C. Scaffold operations adjacent to overhead power lines are prohibited, unless one of the following conditions is satisfied: the power line has been de-energized, relocated or protective coverings installed to prevent contact with the line. If the power line has been de-energized, positive means (e.g., lockout/tagout) shall be used to prevent the lines from being re-energized. See Chapter III-3, *Electrical Equipment*.

2.5.10 Raising and Lowering Materials Using Gin Wheels

A. Gin wheels are to be fixed to scaffolds for purposes of raising and lowering material during scaffold construction or use.

B. Gin wheels shall be mounted on a cantilever tube projecting outward from the scaffold and shall be kept to a minimum distance, not greater than 750 mm (30 in). The horizontal tube holding the gin wheel shall be fixed with right-angle couplers to two scaffold posts (standards). See Figure 2.39.

C. A ring-type gin wheel is preferable. If a hook-type gin wheel is used, it shall not be hooked through a coupler but lashed to the supporting tube with the hook moused. In either case, the gin wheel fixing to the tube shall be prevented from slipping toward or away from the scaffold by one coupler mounted on either side of the fixing. See Figure 2.39.

D. Materials to be raised shall be firmly attached to the gin wheel rope and shall not exceed 50 kg (110 lb). Gin wheel ropes shall be of the correct size to suit the gin wheel, usually 18 mm (3/4 in).

Saudi Aramco: Company General Use

2.5.11 High Winds

Personnel shall not be on any scaffold or other temporary elevated work area during storms or high winds (i.e., sustained winds more than 65 kph [40 mph]) unless the scaffold or other elevated work area is indoors or otherwise unaffected by the weather conditions. Outdoor scaffolds or elevated work areas shall not be used during thunderstorms or when there is likelihood of lightning.

2.5.12 Tools

Only tools recommended by the scaffolding manufacturer shall be used during scaffold erection and dismantling.

2.6 Requirements Common to System and Tube-and-Coupler Scaffolds

2.6.1 Horizontal Members

A. Every line of posts (standards) shall have runners (ledgers) installed horizontally in continuous lengths along the entire scaffold length (longitudinally) and bearers (transoms) installed in continuous lengths horizontally across the entire scaffold width (transversely), at each lift.

B. No lift height shall exceed 2 m (6.5 ft). See Figure 2.40.

C. Board bearers (intermediate transoms) shall be installed as required to limit plank spans to the distances specified in Section 2.5.6 (see Figures 2.21 and 2.22), and where necessary to accommodate differences in plank lengths. These may be removed when no longer required to support any planks.

D. Bearers (transoms) and board bearers (intermediate transoms) shall be installed on top of and not underneath supporting runners (ledgers). See Figure 2.7.

E. Bridging of scaffolds shall be as conceptually shown in Figure 2.41.

F. Scaffold trusses, ladder beams, unit beams, etc., shall be horizontally braced (e.g., by bridging braces) at the top and bottom cords as specified by the manufacturer to prevent lateral torsional buckling (e.g., braced at the quarter points).

2.6.2 Vertical Bracing

A. Vertical bracing to prevent excessive sway in both the transverse and longitudinal directions of system and tube and coupler scaffolds for the full height of the scaffold shall be installed at an angle of between 35 degrees and 55 degrees above the horizontal. See Sections 2.7 and 2.8.

B. Transverse (sectional) braces shall be connected to either posts (standards) or runners (ledgers) as close as possible to the intersection (node point) of

Saudi Aramco: Company General Use

the bearer (transom) and post (standard), not more than 300 mm (12 in) from the node point. See Figure 2.42.

C. Longitudinal (facade) braces shall be connected to posts (standards) as close as possible to the intersection (node point) of the runner (ledger) and post (standard), not more than 300 mm (12 in) from the node point. See Figure 2.43.

D. Brace ends may be joined together with end-to-end (sleeve) couplers, not joint pins. Alternatively, for braces subject to large tension loads, brace ends shall be overlapped by at least 300 mm (12 in) and joined with at least two adjustable (swivel) couplers. See Figure 2.44.

2.7 System Scaffolds

2.7.1 Only specific manufacturers and brands of system scaffolding are permitted to be used within SA. Contact the SA Loss Prevention Department (LPD) for details. No other manufacturer or brand of system scaffolding may be used. System scaffolding shall be designed and constructed in full compliance with the system scaffolding manufacturer's information (e.g., grid size tables) for proper use of their system scaffolding within SA.

2.7.2 System scaffolding from different manufacturers shall not be intermixed, unless permitted in writing by each manufacturer whose systems will be intermixed. Also, tube-and-coupler scaffolding shall not be intermixed with system scaffolding (except bracing as noted below).

2.7.3 Unless otherwise specified in the system scaffolding manufacturer's instructions, all outdoor system scaffolds shall be vertically braced in both directions with diagonal braces (between 35 degrees and 55 degrees) to its full height for each 10 m (33 ft) of run.

2.7.4 Bracing for system scaffolds shall be specially designed for the grid size of the scaffold. However, where specially designed system bracing cannot be used, tube-and-coupler scaffold components may be used as bracing for system scaffolds.

2.7.5 Connections shall be tightened with a single hammer blow to the wedge or cup to provide a high degree of rigidity.

2.7.6 The locking-pin type of system scaffolding shall not be used. See Figure 2.45.

2.7.7 Posts (standards) shall be connected by bolted spigots and they shall be secured into place using two spigot pins for situations where uplift may occur. The upper post (standard) shall slide over the spigot. See Figure 2.46.

Saudi Aramco: Company General Use

2.7.8 Ladders manufactured for use with a specific system scaffolding shall conform to the requirements for ladders. See Chapter II-3, *Ladders and Stepladders*.

2.8 Tube-and-Coupler Scaffolds

2.8.1 Posts (Standards)

A. Joints in posts (standards) shall be staggered (i.e., joints in adjacent posts shall not occur in the same lift height). See Figure 2.47.

B. Joint pins or, preferably, end-to-end (sleeve) couplers shall be used for joints in posts (standards). However, joint pins are only designed for compression loads. Properly tightened end-to-end (sleeve) couplers shall be used where tension (uplift) can be present in a post (standard) or other scaffold tube.

2.8.2 Runners (Ledgers) and Bearers (Transoms)

A. Runners (ledgers) and bearers (transoms) shall be securely attached to the inside of each post (standard). See Figure 2.48.

B. Runners (ledgers) shall be connected to posts (standards) only with right-angle (load-bearing) couplers.

C. When bearers (transoms) are coupled to posts (standards), the bearer shall be connected to the posts only with right-angle (load-bearing) couplers. The bearer's couplers shall rest directly on the runners' (ledgers') right-angle couplers.

D. When a bearer (transom) is coupled to a supporting runner (ledger), the coupler shall be as close as possible to the post (standard), never more than 300 mm (12 in) from the post.

E. When bearers (transoms) and board bearers (intermediate transoms) are coupled to runners (ledgers), they shall always be installed on top of the supporting runners and shall not be installed to hang from the runners.

F. Right-angle (load-bearing) couplers shall not be used to attach bearers (transoms) or board bearers (intermediate transoms) to runners (ledgers) at lifts to be planked. Instead, bearer (putlog) couplers shall be used. See Figure 2.7.

G. Bearers (transoms), including board bearers (intermediate transoms), shall extend at least 100 mm (4 in) beyond the runner centerline and shall provide full contact with the couplers.

H. The lowest runners and bearers (base lift) shall be located approximately 150 mm (6 in) above the scaffold base, except where this is not possible. See Figures 2.40 and 2.49.

Saudi Aramco: Company General Use

I. Runners (ledgers) or bearers (transoms) shall not have more than one joint between adjacent posts (standards). Such joints shall be located as close as possible to a post (standard) and shall be staggered (i.e., adjacent joints shall not occur in the same bay). See Figure 2.47.

J. End-to-end (sleeve) couplers may be used for joints in runners (ledgers) or bearers (transoms). In this case, the joint shall not be located more than 300 mm (12 in) from a post (standard).

K. Alternatively, joints in runners (ledgers) or bearers (transoms) may be made by abutting the runner or bearer ends together with an end-to-end (sleeve) coupler and overlapping these ends with a separate parallel tube at least 600 mm (24 in) long. This parallel tube shall be coupled to each abutted runner or bearer end with at least two equally spaced adjustable (swivel) couplers (i.e., minimum of four couplers per joint). In this case, the joint shall not be located in the middle third of the runner or bearer span. See Figure 2.50.

L. Right angle (double) couplers shall be installed such that the load is against the hinge flap and not against the bolt.

M. Scaffold couplers shall be tightened to the torque indicated by the manufacturer, preferably between 4 kg-m (40 N-m) (30 ft-lb) and 8 kg-m (80 N-m) (60 ft-lb). Only proper scaffold spanner wrenches shall be used. “Cheater bars” or longer-handled wrenches shall not be used, as they give greater leverage than proper scaffold spanner wrenches and could damage the coupler.

2.8.3 Vertical Bracing for Tube and Coupler Scaffolds

A. Transverse (sectional) “zig-zag” bracing (see Figures 2.42, 2.51 and 2.52)

- The first diagonal brace shall be installed from the base of the first post (standard) diagonally upward to the first lift at whichever post (standard) is required to make the angle of the diagonal brace be between 35 degrees and 55 degrees (may be across two bays in one lift height).
- Additional diagonal braces shall then be installed in alternating directions (“zig-zag”) until reaching the top of the scaffold.
- For wide scaffolds, this transverse “zig-zag” bracing shall be repeated across the width of the scaffold such that no more than three adjacent bays are open without transverse bracing.
- This set of transverse “zig-zag” braces shall be installed at both scaffold ends and repeated along the length of the scaffold at least every third line of posts (standards).

B. Transverse (sectional) “X” bracing (see Figures 2.16, 2.53, and 2.54)

- The first two diagonal braces are installed forming an “X” shape. Thus, the first brace is installed from the base of the first post (standard) diagonally upward to the first lift at the post (standard) required for the

Saudi Aramco: Company General Use

brace to be between 35 degrees and 55 degrees (may be across two bays in one lift height).

- The second brace is installed from the base of this same post (standard) diagonally upward to the first post (standard).
- This "X" bracing shall be repeated up the height of the scaffold at least every third lift (two adjacent open lift heights permitted).
- For wide scaffolds, such transverse "X" bracing shall be repeated across the width of the scaffold such that no more than three adjacent bays are open without transverse bracing.
- This set of transverse "X" braces shall be installed at both scaffold ends and repeated along the length of the scaffold at least every third line of posts (standards).

C. Longitudinal (facade) bracing for a scaffold whose length is greater than its height (see Figure 2.43)

- A diagonal brace shall be installed from the base of the first end post (standard) diagonally upward, at between 35 degrees and 55 degrees, to the extreme top of the scaffold.
- This longitudinal bracing shall be repeated along the length of the scaffold at least every fifth post (standard).
- This longitudinal (facade) bracing shall be installed, in opposite directions, along the front (inner) and rear (outer) lines of posts (standards).

D. Longitudinal (facade) bracing for a scaffold whose length is less than its height (see Figure 2.55)

- The first diagonal brace shall be installed from the base of the first end post (standard) upward, at between 35 degrees and 55 degrees, along the entire length of the scaffold to the last end post (standard).
- Additional diagonal braces shall then be installed, at between 35 degrees and 55 degrees, in alternating directions ("zig-zag") across the entire scaffold length until reaching the top of the scaffold.
- This set of longitudinal (facade) braces shall be installed along the front (inner) and rear (outer) lines of posts (standards).

E. Interior longitudinal "zig-zag" bracing (see Figure 2.56) for a scaffold with multiple bays across its width (i.e., a "birdcage" scaffold)

- The first diagonal brace shall be installed from the base of the first post (standard) diagonally upward, at between 35 degrees and 55 degrees, to the second post (standard) at the first lift (across one bay in one lift height).
- Additional diagonal braces shall then be installed in alternating directions ("zig-zag") until reaching the top of the scaffold.

Saudi Aramco: Company General Use

- Such longitudinal "zig-zag" bracing shall be repeated along the length of the scaffold such that no more than four adjacent bays are open without longitudinal braces.
- This set of longitudinal "zig-zag" braces shall be repeated across the width of the scaffold at least every third line of posts (standards).

2.8.4 Light-Duty Tube-and-Coupler Scaffolds

A. For light-duty tube-and-coupler scaffolds constructed entirely of tubing manufactured and "embossed" (stamped) in accordance with Section 2.4.2, the permitted transverse post spacing (bearer/transom span) and corresponding maximum longitudinal post spacing (runner/ledger span) shall be as shown in Table 2.3. See Figures 2.57 and 2.58.

Table 2.3 "Embossed" Light-Duty Tube-and-Coupler Post Spacing

Embossed Tubing	Number of 225 mm (9 in) wide planks per bay width	Transverse Post Spacing (Bearer/Transom Span)	Longitudinal Post Spacing (Runner/Ledger Span)
Option 1	4	1.0 m (3.25 ft)	2.7 m (9.0 ft) max.
Option 2	5	1.2 m (4.0 ft)	2.4 m (8.0 ft) max.

B. Effective July 1, 2012, tube-and-coupler scaffolds shall be constructed only with tubing that has been manufactured and "embossed" (stamped) in accordance with Section 2.4.2. Until that date, the permitted bearer (transom) spans and the corresponding maximum runner (ledger) spans for light-duty tube-and-coupler scaffolds constructed with any tubing that is not "embossed" shall be reduced and shall be as shown in Table 2.4. See Figures 2.59 and 2.60.

C. Larger post spacings for light-duty tube-and-coupler scaffolds may be used if justified (per Section 2.5.1) by structural calculations or load tests submitted for review per GI 8.001, along with material tensile/yield stress test reports for the specific scaffold tubing to be used.

Table 2.4 "Non-embossed" Light-Duty Tube-and-Coupler Post Spacing*

Non-embossed Tubing	Number of 225 mm (9 in) wide planks per bay width	Transverse Post Spacing (Bearer/Transom Span)	Longitudinal Post Spacing (Runner/Ledger Span)
Option 1	4	1.0 m (3.25 ft)	2.3 m (7.5 ft) max.
Option 2	5	1.2 m (4.0 ft)	1.8 m (6.0 ft) max.

* Based on 48.3 mm (2 in) O.D., 3.2 mm (0.126 in) wall thickness, Fy=235 N/mm^2, steel tubing

Saudi Aramco: Company General Use

D. Light-duty tube-and-coupler scaffolds may have a maximum of three working levels in use at any one time only when there are no additional levels where platform units (e.g., planks) are installed. The maximum total number of levels that can be planked at one time depends on the number of working levels simultaneously being used by personnel and shall be as shown in Table 2.5 for light-duty scaffolds. In this case, the maximum uniformly distributed load on each working level shall be 120 kg/m^2 (1.2 kN/m^2) (25 lb/ft^2).

Table 2.5 Light-Duty Tube-and-Coupler Scaffolds

Maximum Number of Working Levels	Max. Total Number Planked/Platformed Levels	Maximum Scaffold Height
1	9	38 m (125 ft)
2	6	38 m (125 ft)
3	3	28 m (91 ft)

Reference: GS 217, Table 8.

E. Light-duty tube-and-coupler scaffolds requiring more than the working/planked levels shown in Table 2.5, or over the maximum heights shown therein, shall be classified as a "special scaffold" and shall be properly designed and reviewed per GI 8.001. Preferably, properly designed system scaffolding should be used instead of tube-and-coupler construction for scaffolds over 38 m (125 ft) tall.

2.8.5 Medium-Duty Tube-and-Coupler Scaffolds

A. All tubing used to construct medium-duty and more heavily loaded tube-and-coupler scaffolds shall be manufactured and "embossed" (stamped) in accordance with Section 2.4.2.

B. For medium-duty tube-and-coupler scaffolds, the maximum transverse post spacing (bearer/transom span) is 1.2 m (4 ft) and the maximum longitudinal post spacing (runner/ledger span) is 1.8 m (6 ft). See Figures 2.61 and 2.62.

C. Larger post spacings for medium-duty tube-and-coupler scaffolds may be used if justified (per Section 2.5.1) by structural calculations or load tests submitted for review per GI 8.001, along with material tensile/yield stress test reports for the specific scaffold tubing to be used.

D. At least one board bearer (intermediate transom) shall be installed in each bay of every platform (planked) level for medium-duty tube-and-coupler scaffolds. Alternately, double bearers may be used only if the maximum allowable plank spans in Section 2.5.6 are not exceeded. See Figures 2.61 and 2.62.

E. Medium-duty tube-and-coupler scaffolds may have a maximum of two working levels in use at any one time only when there are no additional

Saudi Aramco: Company General Use

levels where platform units (e.g., planks) are installed. When only one working level is being used, a maximum of six additional levels may be planked if they are not being used at the same time. In this case, the maximum distributed load on each working level shall not exceed 240 kg/m^2 (2.4 kN/m^2) (50 lb/ft^2).

Table 2.6 Medium-Duty Tube-and-Coupler Scaffolds

Maximum Number of Working Levels	Maximum Total Number Planked/Platformed Levels	Maximum Scaffold Height
1	7	38 m (125 ft)
2	2	24 m (78 ft)

Reference: GS217, Table 9.

F. Medium-duty tube-and-coupler scaffolds requiring more than the working/planked levels shown in Table 2.6, or over the maximum heights shown therein, shall be classified as a "special scaffold" and shall be properly designed and reviewed per GI 8.001. Preferably, properly designed system scaffolding should be used instead of tube-and-coupler construction for scaffolds over 38 m (125 ft) tall.

2.9 Mobile and Tower Scaffolds

2.9.1 Mobile and Tower Scaffold Construction

A. Mobile and tower scaffolds shall be plumb, level and square, and shall be horizontally and vertically braced (in both directions) by diagonal braces. See Figures 2.26 and 2.27.

B. Plan (horizontal) bracing shall be installed at the base lift, at the top lift and at least every third lift of all mobile and tower scaffolds to prevent racking (twisting). See Figures 2.26 and 2.27.

C. Light-duty tube-and-coupler mobile and tower scaffolds (e.g., used only for personnel access and inspection) that are one bay long by one bay wide (only four posts) shall be constructed entirely of steel tubing manufactured and "embossed" per Section 2.4.2 and shall have a maximum post spacing of 2 m (6.5 ft) in both directions. In this case, at least two equally spaced board bearers (intermediate transoms) shall be used at the platform level.

D. Medium-duty tube-and-coupler mobile and tower scaffolds that are one bay long by one bay wide (only four posts) shall be constructed entirely of steel tubing manufactured and "embossed" per Section 2.4.2 and shall have a maximum post spacing of 1.5 m (5 ft) in both directions.

E. For mobile and tower scaffolds, an internal ladder (with a hinged cover over the access hole in the platform) is preferred over an external ladder. See Figures 2.26 and 2.27. If an external ladder must be used, it shall be installed vertically on the narrow side of the scaffold (to minimize the

Saudi Aramco: Company General Use

potential for overturning) and a step-through opening in the guardrail system (protected by a self-closing drop bar at toprail height) shall be provided, instead of workers having to climb over the guardrails.

F. Screwjacks shall be used to level mobile or tower scaffold as needed.

G. Mobile scaffolds rated for light duty shall have steel caster wheels not less than 13 cm (5 in) in diameter.

H. Mobile scaffolds rated for medium duty shall have heavy-duty steel caster wheels not less than 18 cm (7 in) in diameter.

I. Post loads shall not exceed the safe working capacity of the caster wheels.

J. Caster wheels shall be fitted with a positive wheel lock (which cannot be accidentally released) to prevent movement while the mobile scaffold is being used. A latch-type wheel locking assembly (see Figure 2.63) is preferred, instead of manual screw-type wheel locks.

K. Caster wheels shall be securely fixed to the base of scaffold posts (standards) or screwjacks by locking pins.

L. The working area of any platform shall not extend outside the scaffold base dimensions. Cantilevered working areas are not permitted for mobile or tower scaffolds.

M. Platform units (planks) shall be securely fixed in position.

N. For *mobile* scaffolds, the uppermost platform height shall not exceed three times the scaffold's minimum base dimension.

O. For freestanding stationary *tower* scaffolds, the uppermost platform height shall not exceed four times the scaffold's minimum base dimension.

P. Where the basic freestanding scaffold does not meet the above maximum height-to-base requirements, proper outriggers shall be installed on the scaffold to achieve the required base dimension in order to stabilize the scaffold against tipping.

Q. The maximum height of mobile scaffolds shall not exceed 12.2 m (40 ft).

R. A complete guardrail system shall be provided at every platform per Section 2.5.4 with toeboards per Section 2.5.5.

2.9.2 Mobile Scaffold Operation

A. A mobile scaffold shall only be used and moved on surfaces sufficiently firm and level to ensure stability. Where the scaffold is to be used on an elevated floor or roof, it shall be designed to apply loads no greater than the capacity of the floor or roof.

Saudi Aramco: Company General Use

B. A mobile scaffold shall be moved only by manually pushing at the base. Pushing force shall not be applied at a height greater than 1.5 m (5 ft) above the scaffold's base/supporting surface.

C. Personnel, equipment or materials shall not be on the working platform or elsewhere on a mobile scaffold while it is in motion.

D. Caster wheels shall be locked at all times, except during movement of the mobile scaffold.

E. Temporary foundations or tracks shall be properly set in place on soft or uneven ground to facilitate safe movement of the mobile scaffold. The temporary foundation or track shall be level and properly secured.

2.10 Fabricated Tubular Frame Scaffolds

2.10.1 All fabricated tubular frame scaffolds shall be erected per the manufacturer's published instructions and the requirements of this chapter.

2.10.2 Fabricated tubular frame scaffolds shall not be used for a loading greater than a light-duty loading of 120 kg/m^2 (1.2 kN/m^2) (25 lb/ft^2).

2.10.3 The maximum height of fabricated tubular frame scaffolds shall be 6 m (20 ft).

2.10.4 Components from different manufacturers of fabricated tubular frame scaffolding shall not be intermixed.

2.10.5 Each frame shall have flip-lock fittings, in good condition, which shall be used for the attachment of horizontal members (e.g., guardrails) and diagonal members (e.g., bracing).

2.10.6 Scissor (cross) bracing shall be installed on both sides in every bay between each lift.

2.10.7 A complete guardrail system shall be provided at every platform per Section 2.5.4 with toeboards per Section 2.5.5.

2.11 Bracket Scaffolds

2.11.1 Brackets and Straps

A. Brackets and bracket straps shall be constructed and erected in accordance with the manufacturer's published instructions and this chapter, using the minimum dimensions shown in Figure 2.64.

B. Bracket scaffolds shall only be used to support a light-duty loading of 120 kg/m^2 (1.2 kN/m^2) (25 lb/ft^2).

C. Brackets, bracket straps and other associated structural members shall be free from detrimental corrosion, damage or defects.

Saudi Aramco: Company General Use

D. Bracket straps welded to the tank wall shall be at least 250 mm (10 in) wide x 75 mm (3 in) high x 10 mm (3/8 in) thick, with bends at the center for inserting brackets. The gap created by the bent section of the bracket strap shall be compatible in size with the bracket to be inserted, with a 3 mm (1/8 in) maximum clearance.

E. Bracket straps shall be welded to the tank shell for a length of at least 150 mm (6 in) along the top edge of the strap (two welds 75 mm [3 in] minimum) and down 25 mm (1 in) along each side of the strap, with a 5 mm (3/16 in) fillet weld. No weld is required along the bottom edge of the bracket straps (see Figure 2.64). However, if the type of bracket strap shown in Figure 2.65 is used, it is not necessary to have 25 mm (1 in) welds down the sides of the bracket strap.

F. If 38 mm (1 1/2 in) thick wood planks are used, the maximum circumferential distance between brackets shall not be more than 1.5 m (5 ft) on center. Longer spans allowed by the plank manufacturer shall be in accordance with Section 2.4.3 and may be used if the same manufacturer's identification mark is clearly visible on each plank used.

G. Except as noted in the following paragraph, if 50 mm (2 in) thick wood planks are used, the maximum circumferential distance between brackets shall not be more than 2.4 m (8 ft) on center.

H. Only if all brackets (frames), platform units (planks), etc., are certified to meet the requirements in 29 CFR 1926 (OSHA), Subpart L, Appendix A, Section 2(z), Tank Builder's Scaffold, the maximum circumferential distance between brackets may be 3.2 m (10 1/2 ft) on center. In this case, planks shall be full-dimensioned 50 mm (2 in) thick by 300 mm (12 in) wide Douglas Fir or Southern Yellow Pine of Select Structural Grade or Scaffold Grade.

I. Welders welding bracket straps to the tank shall be certified by SA.

J. Prior to welding on any tank, approval of welding procedures and verification of tank integrity is required from the SA proponent organization's engineering unit.

K. Prior to attaching the bracket, completed bracket strap welds shall be inspected and approved by a welding inspector who is certified by SA.

L. Brackets shall be inspected prior to installation. Damaged or defective brackets shall be removed from service.

M. Brackets shall be installed vertically.

2.11.2 Guardrails and Platforms for Bracket Scaffolds

A. A continuous guardrail system shall be provided along the outside platform edge of all bracket scaffolds.

Saudi Aramco: Company General Use

B. A guardrail system shall be provided on the inside platform edge wherever the gap between the platform and the tank exceeds 360 mm (14 in).

C. Guardrails for bracket scaffolds shall be constructed using either wire rope or steel tubing. Wire rope guardrails shall be 10 mm (3/8 in) diameter and shall be securely fixed and kept tight (i.e., using turnbuckles). Guardrail tubing shall meet the strength requirements of Section 2.5.4 and there shall be no end-to-end connections occurring anywhere but at the guardrail support uprights.

D. Guardrail support uprights shall be made of scaffold-grade tubing or structural angles. Preferably, these uprights are to be permanently welded to the brackets. An acceptable alternative is for each upright to be firmly secured into a 150 mm (6 in) minimum high sleeve or spigot pin, which is welded to the bracket. However, a sleeve or spigot pin, welded to the bracket and used to anchor a guardrail support upright, may be 100 mm (4 in) high only if the upright is firmly secured to the stub sleeve or pin with a steel hairpin to prevent the upright from coming loose, as shown in Figure 2.66.

E. Guardrails and support uprights that are certified to meet 29 CFR 1926 (OSHA), Subpart L, Appendix A, Section 1(d) may be used for bracket scaffolds.

F. Guardrail support uprights shall be constructed such that the toprail is at least 0.95 m (38 in) and not more than 1.15 m (45 in) above the walking/working surface.

G. Toeboards shall be installed per Section 2.5.5. Toeboards shall not be nailed to scaffold planks.

H. All working levels shall be fully planked. Working levels shall be at least two planks wide but not more three planks wide.

I. Planks shall overlap in one direction only and the minimum overlap shall be 23 cm (9 in).

J. Platform units (planks) shall be secured to the brackets in a manner that will prevent movement.

K. The area below bracket scaffolds shall be barricaded and warning signs posted.

2.12 Underhung Scaffolds

2.12.1 Underhung scaffolds may be constructed with galvanized (unpainted) cup-locking, rosette or captive-wedge types of system scaffolding (see Figure 2.67), as well as with galvanized tube-and-coupler scaffolding. However, if a rosette or captive-wedge type of system scaffolding is used to construct underhung scaffolds, adequate plan (horizontal) bracing shall be installed and/or each platform bay shall be completely filled with properly locked-in

Saudi Aramco: Company General Use

prefabricated metal planks (not wood planks), which are manufactured for use with this specific system scaffolding, in order to provide adequate rigidity.

2.12.2 Underhung scaffolds shall be hung from structures capable of safely supporting the (unfactored) loads imposed on them by the scaffold.

2.12.3 A complete guardrail system shall be provided at all platform and landing levels per Section 2.5.4 with toeboards per Section 2.5.5.

2.12.4 Suspension points of hanger tubes shall be securely attached to the overhead supporting structure in order to prevent their being dislodged by all potential forces acting upon them.

2.12.5 Hanger tubes shall be attached to the supporting beam using a box-type connection made up of two horizontal tubes, with each horizontal tube attached to the top and bottom flanges of the supporting beam with a pair of girder couplers. Both horizontal tubes shall be attached to the hanger tubes with right-angle couplers. See Figure 2.68. It is prohibited to attach girder couplers to only the bottom beam flanges.

2.12.6 Check (safety) couplers shall be installed at the top and bottom of all hanger tubes. Check (safety) couplers shall also be installed directly beneath all trapeze tubes. See Figure 2.68.

2.12.7 Whenever possible, vertical hanger tubes for tube-and-coupler underhung scaffolds are to be one piece. Where joints are necessary, the hanger tubes shall be single-lapped using at least four adjustable (swivel) couplers. See Figures 2.50 and 2.68. However, vertical hanger tubes in underhung scaffolds constructed from system scaffolding shall be one piece (i.e., joints not permitted).

2.12.8 Trapeze tubes shall be installed approximately 600 mm (2 ft) below the lowest platform level to assist in erection, alteration and dismantling. See Figure 2.68.

2.12.9 For tube-and-coupler underhung scaffolds, runners (ledgers), bearers (transoms), and/or ladder beams shall be coupled to hanger tubes using right-angle (not adjustable) couplers.

2.12.10 Hanger tube spacing shall comply with the post spacing requirements for the load duty of scaffold, unless ladder beams are used. See Sections 2.7, 2.8.4 and 2.8.5.

2.12.11 At least one board bearer (intermediate transom) shall be installed when the hanger tube spacing is more than the maximum plank span allowed by Section 2.5.6.

2.12.12 Only drop-forged girder couplers shall be used for the support of underhung scaffolds. Pressed girder couplers shall not be used for the support of hanging scaffolds.

Saudi Aramco: Company General Use

2.12.13 Splices in ladder beams shall be as close as possible to the hanger tubes and are not permitted within the middle half of the ladder beam span.

Note: Some of the figures in this chapter have been reproduced with permission from *A Guide to Practical Scaffolding*, published by the Construction Industry Training Board (CITB).

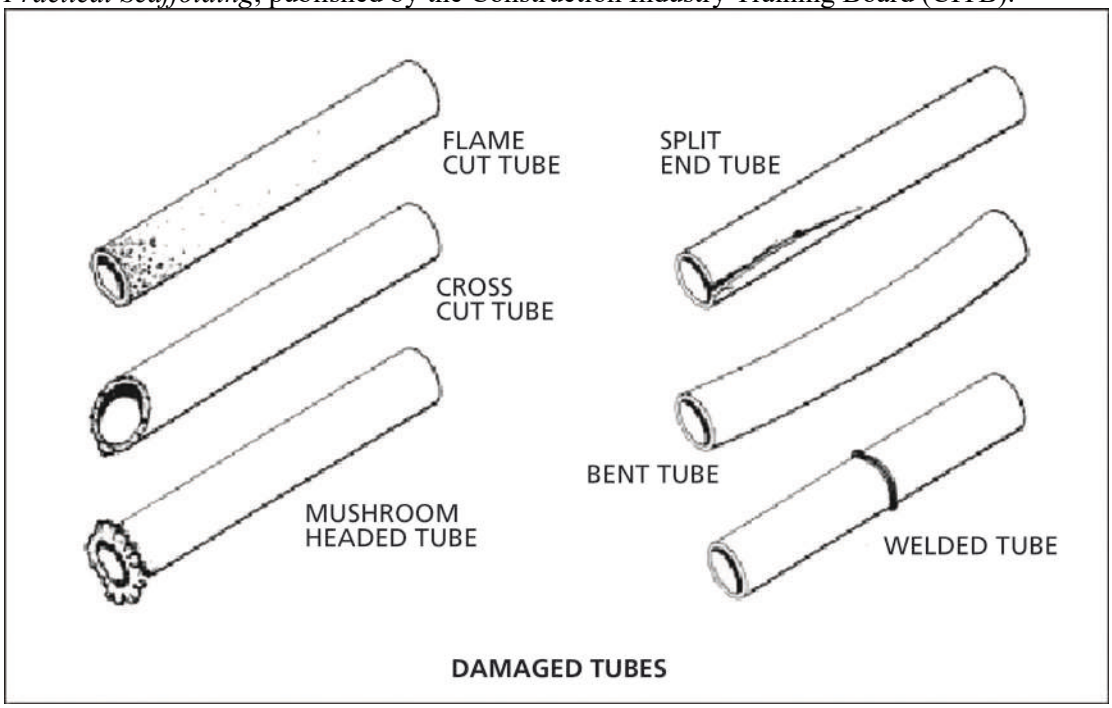

Figure 2.1

Saudi Aramco: Company General Use

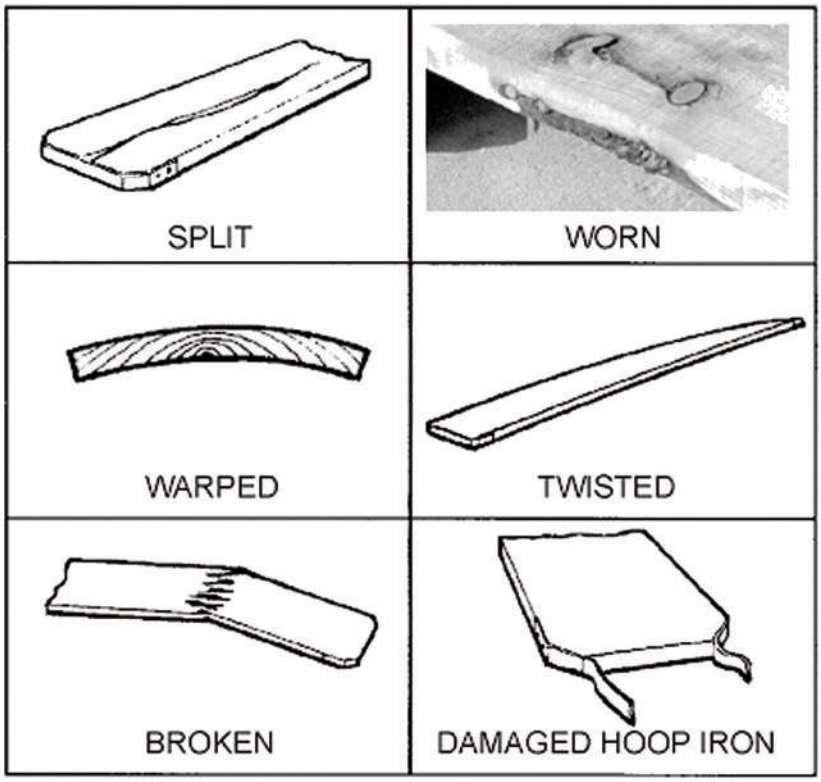

PLANK INSPECTION

Figure 2.2

Saudi Aramco: Company General Use

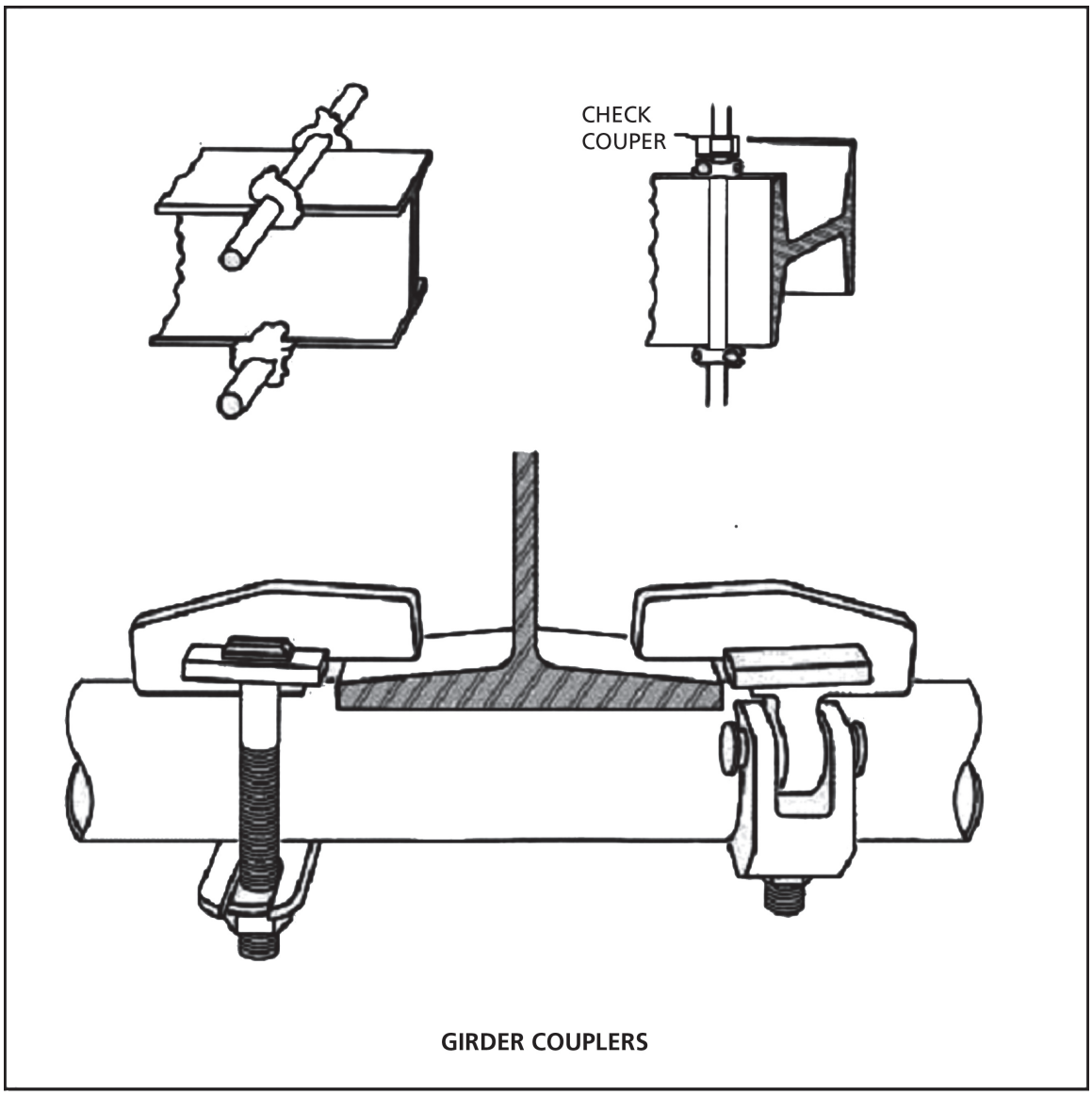

GIRDER COUPLERS

Figure 2.3

Saudi Aramco: Company General Use

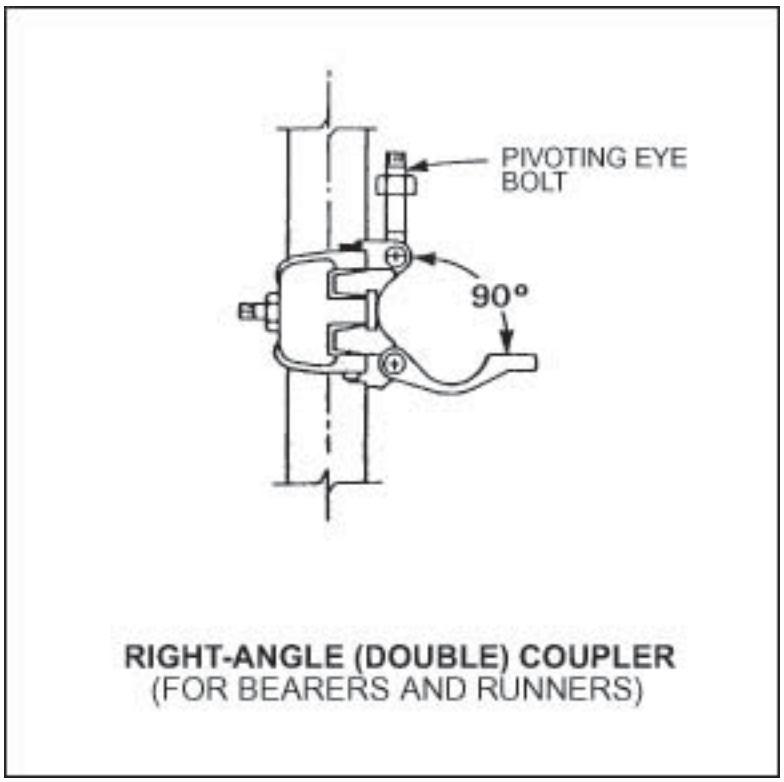

Figure 2.4

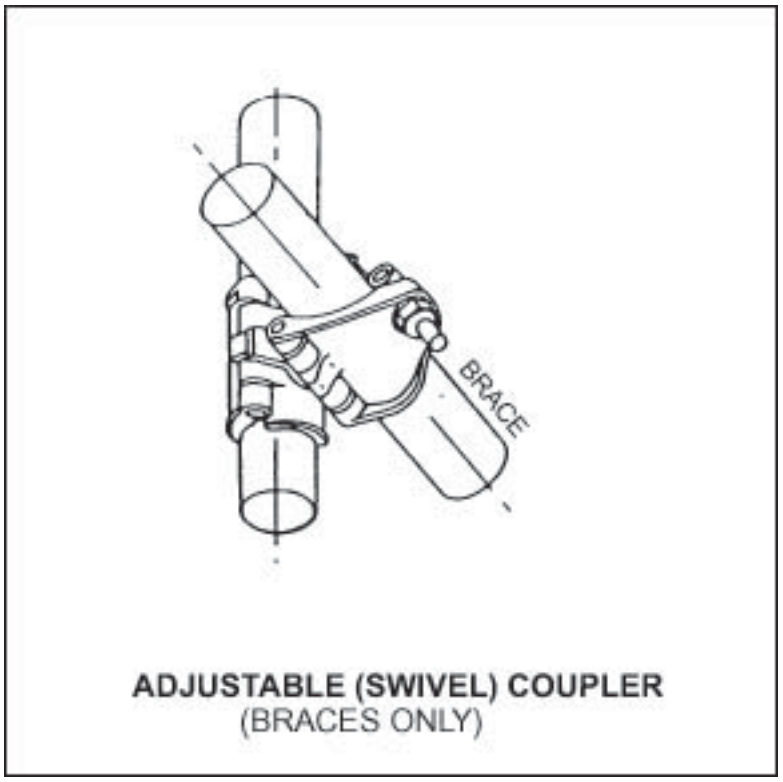

Figure 2.5

Saudi Aramco: Company General Use

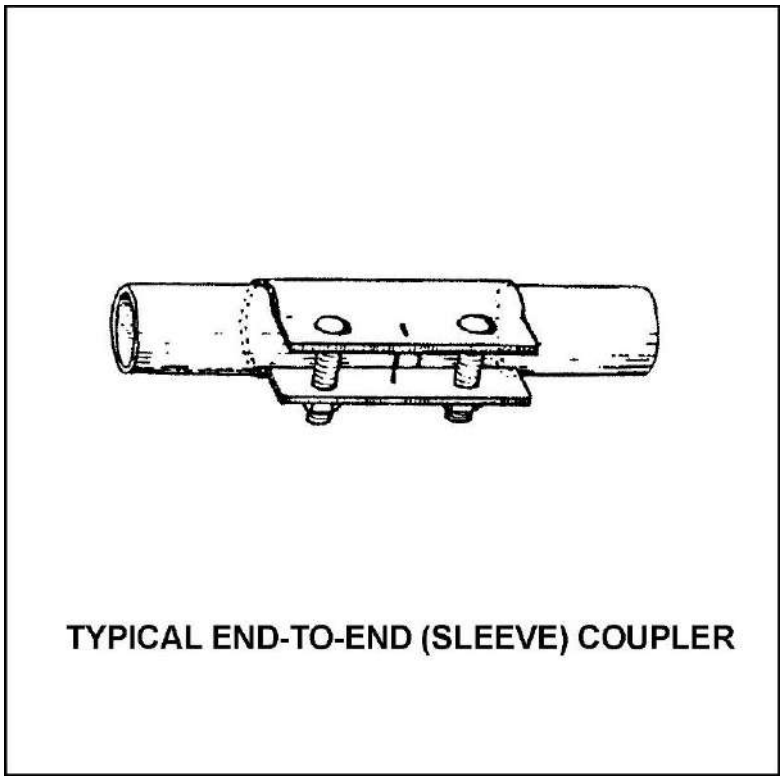

TYPICAL END-TO-END (SLEEVE) COUPLER

Figure 2.6

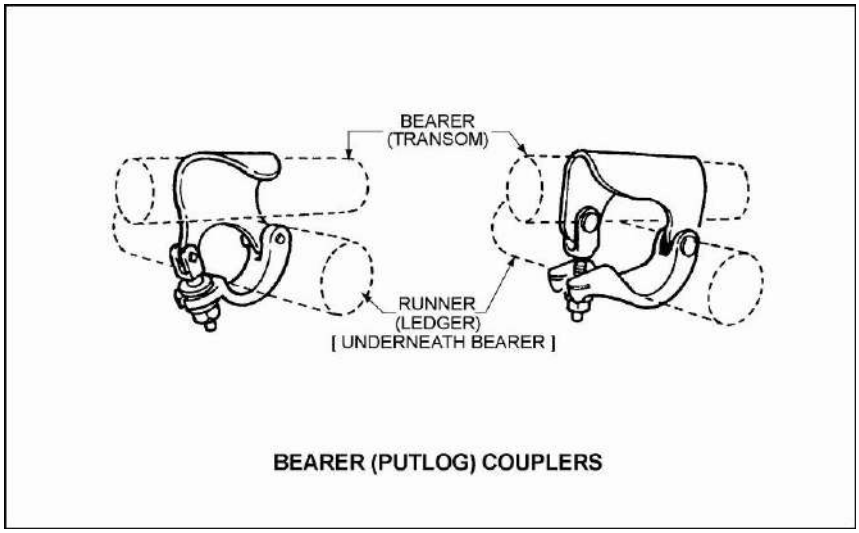

BEARER (PUTLOG) COUPLERS

Figure 2.7

Saudi Aramco: Company General Use

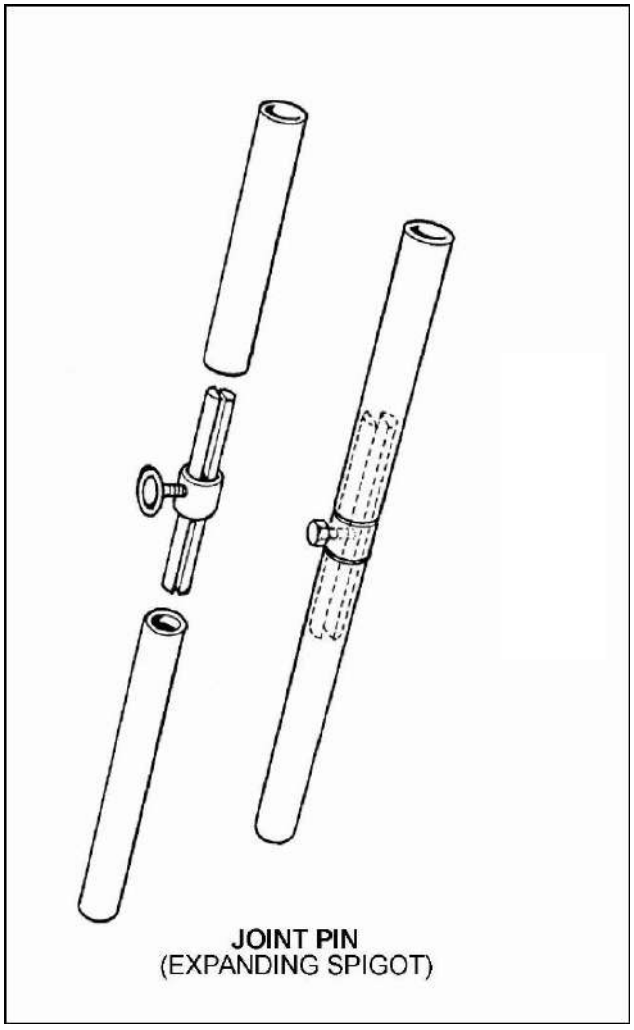

Figure 2.8

Saudi Aramco: Company General Use



Figure 2.9

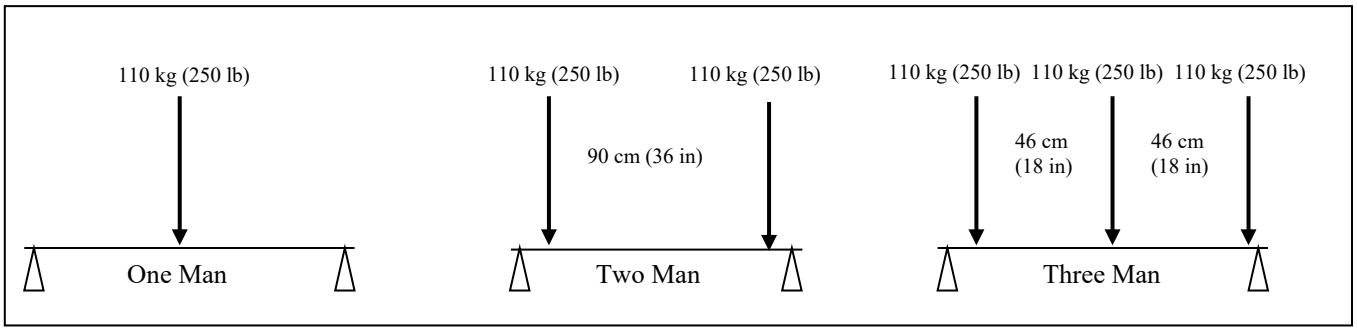

Figure 2.10 Concentrated Load Cases for Platform Units

Saudi Aramco: Company General Use

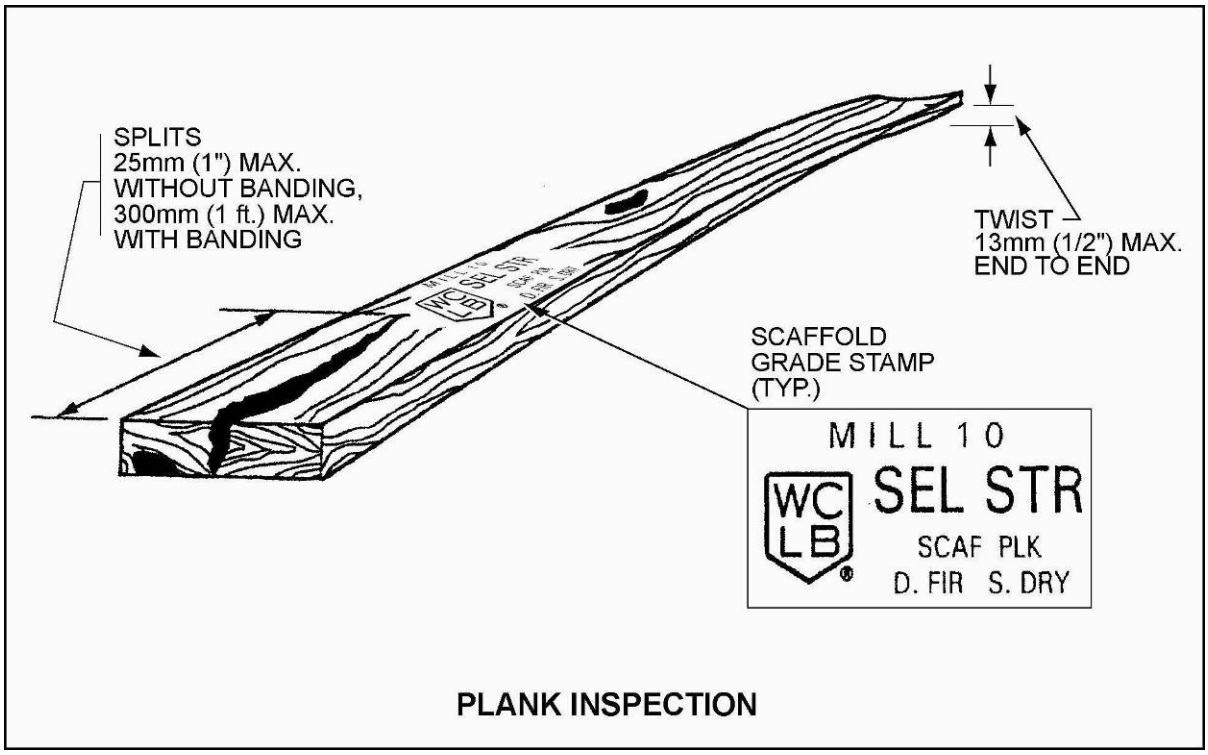

Figure 2.11

Saudi Aramco: Company General Use



Figure 2.12

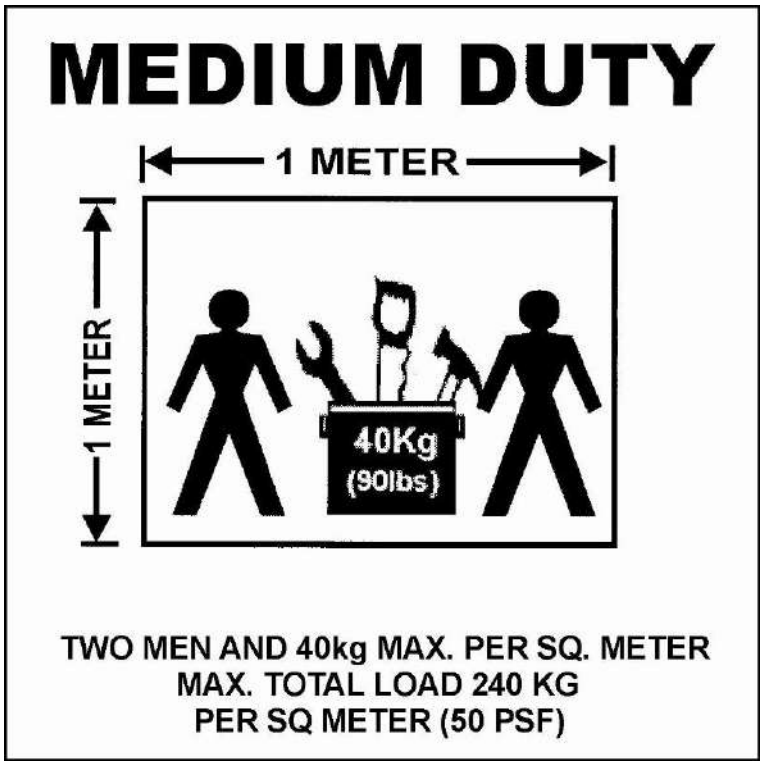

Figure 2.13

Saudi Aramco: Company General Use

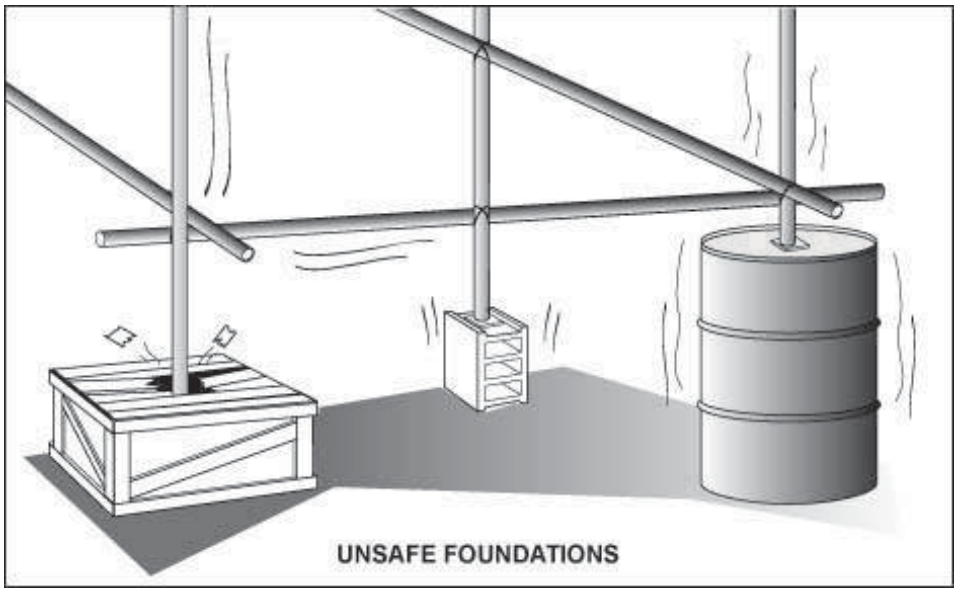

Figure 2.14

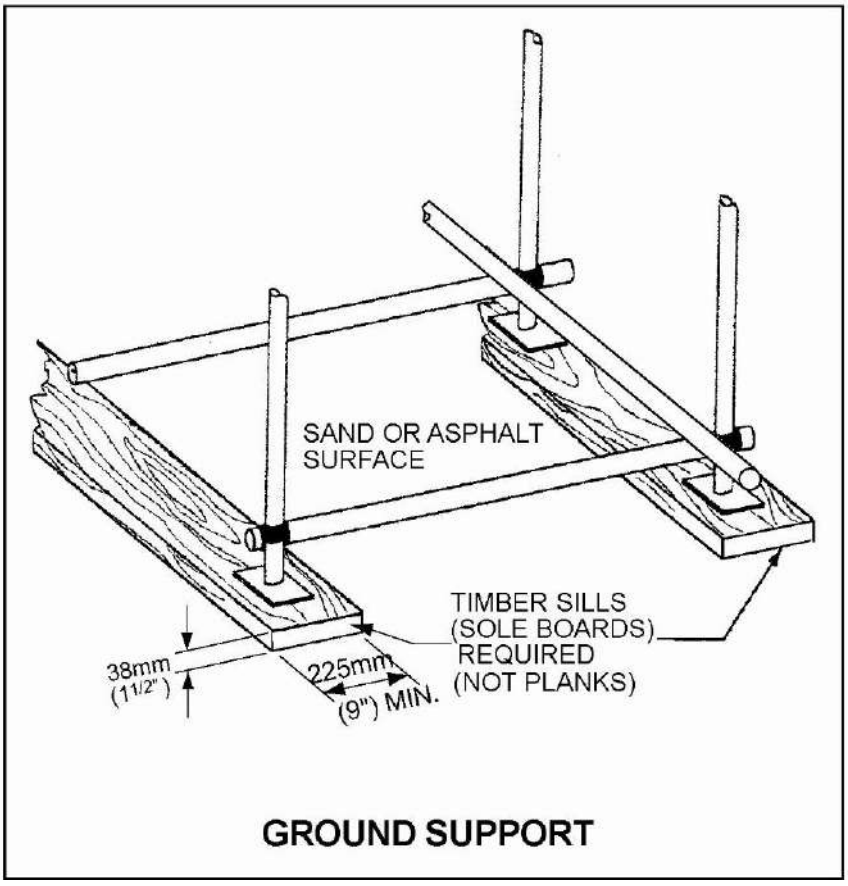

Figure 2.15

Saudi Aramco: Company General Use

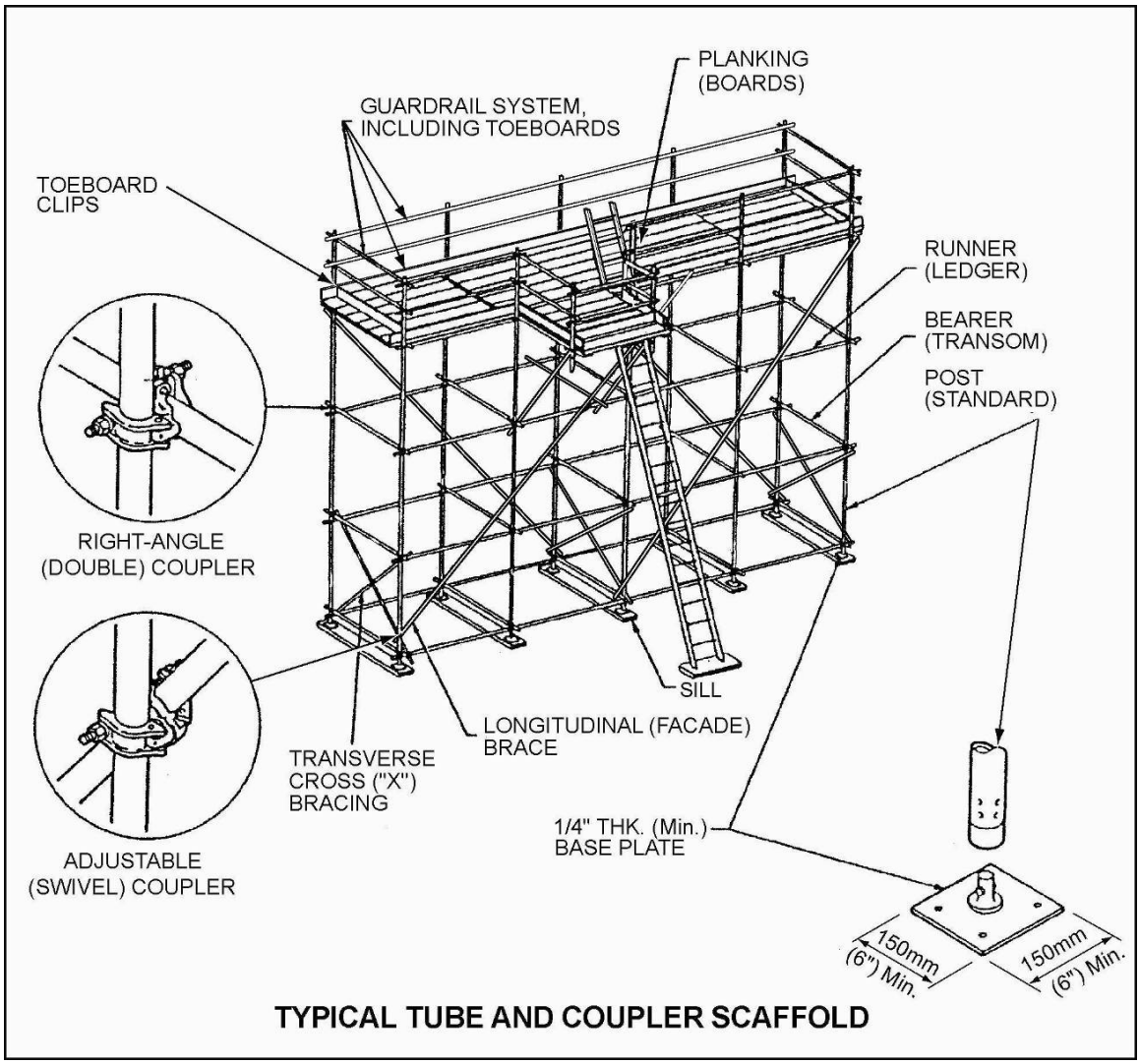

Figure 2.16

Saudi Aramco: Company General Use

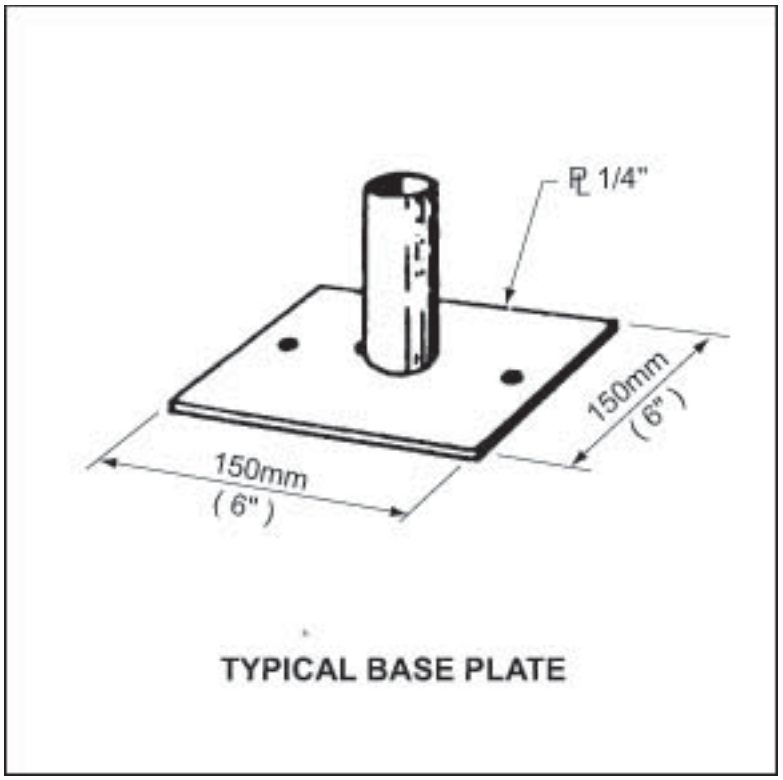

Figure 2.17

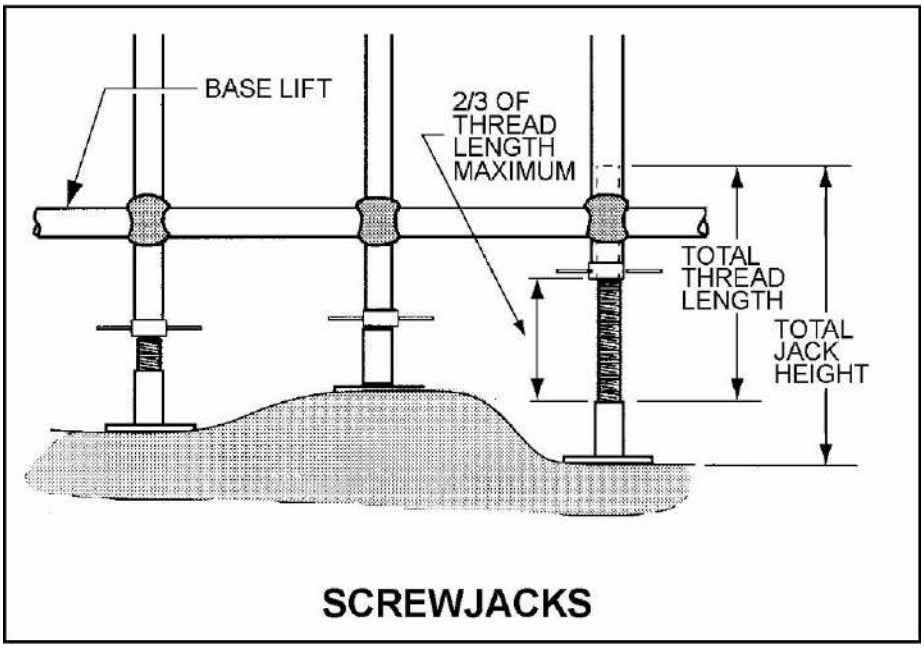

Figure 2.18

Saudi Aramco: Company General Use

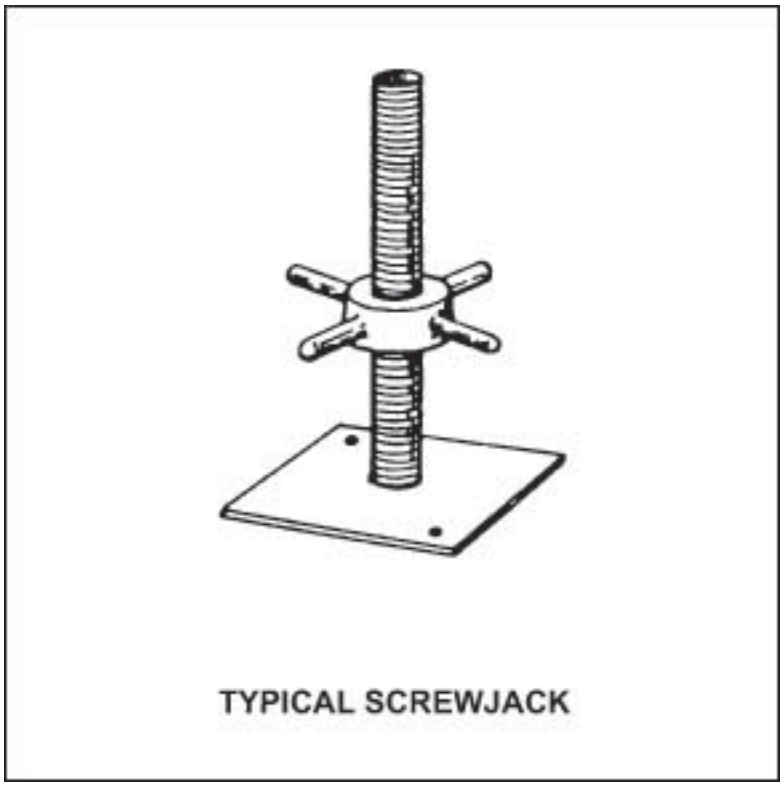

Figure 2.19

Saudi Aramco: Company General Use

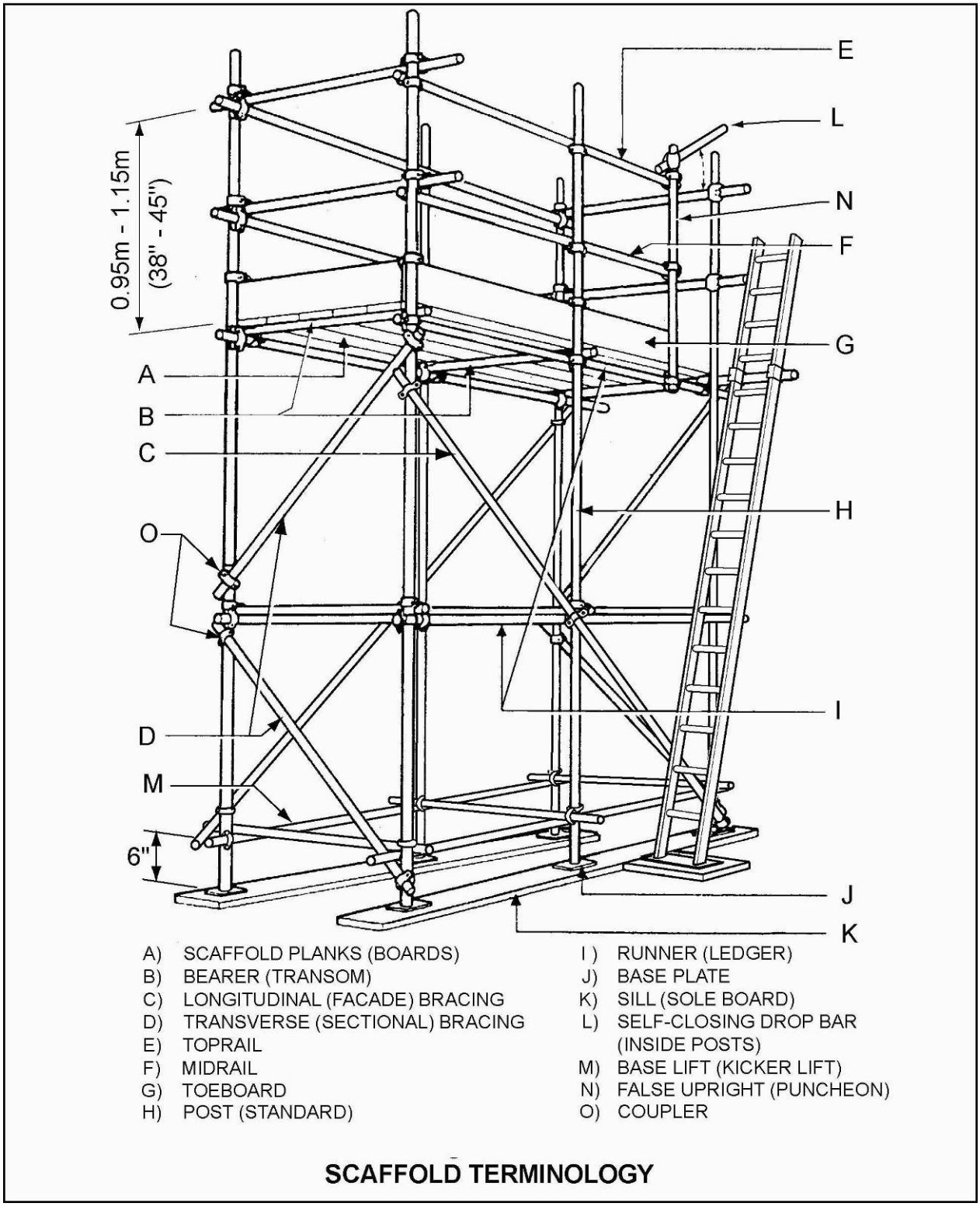

A) SCAFFOLD PLANKS (BOARDS)
B) BEARER (TRANSOM)
C) LONGITUDINAL (FACADE) BRACING
D) TRANSVERSE (SECTIONAL) BRACING
E) TOPRAIL
F) MIDRAIL
G) TOEBOARD
H) POST (STANDARD)
I) RUNNER (LEDGER)
J) BASE PLATE
K) SILL (SOLE BOARD)
L) SELF-CLOSING DROP BAR (INSIDE POSTS)
M) BASE LIFT (KICKER LIFT)
N) FALSE UPRIGHT (PUNCHEON)
O) COUPLER

SCAFFOLD TERMINOLOGY

Figure 2.20

Saudi Aramco: Company General Use

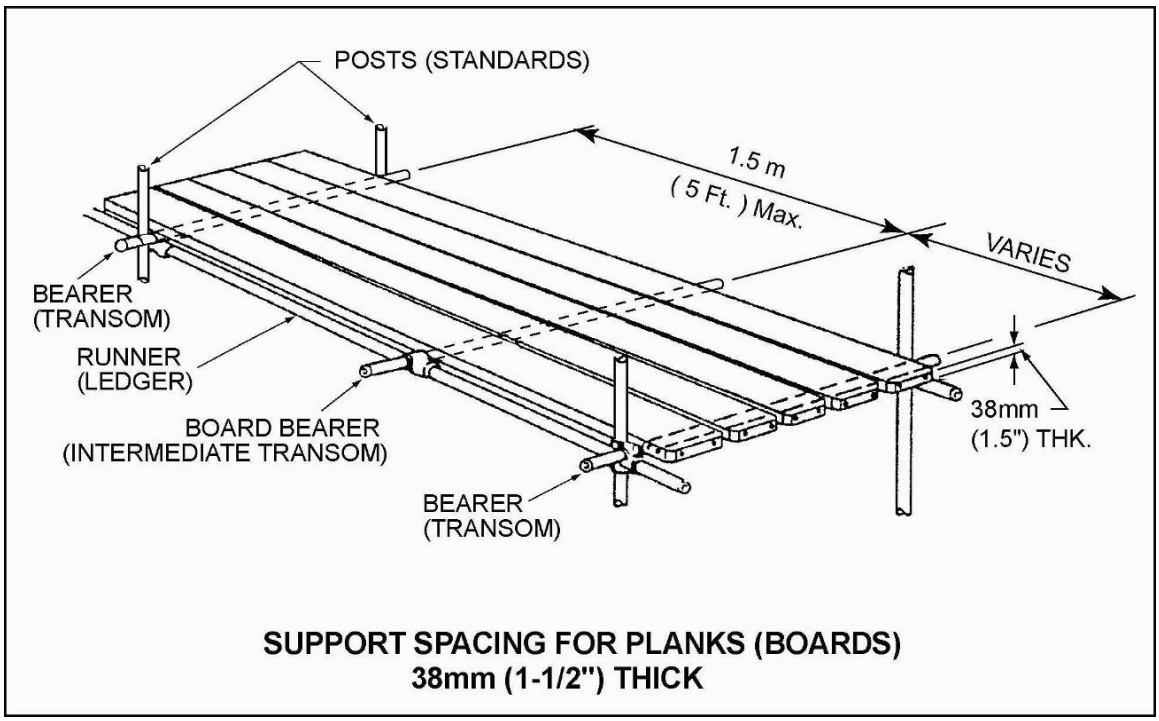

Figure 2.21

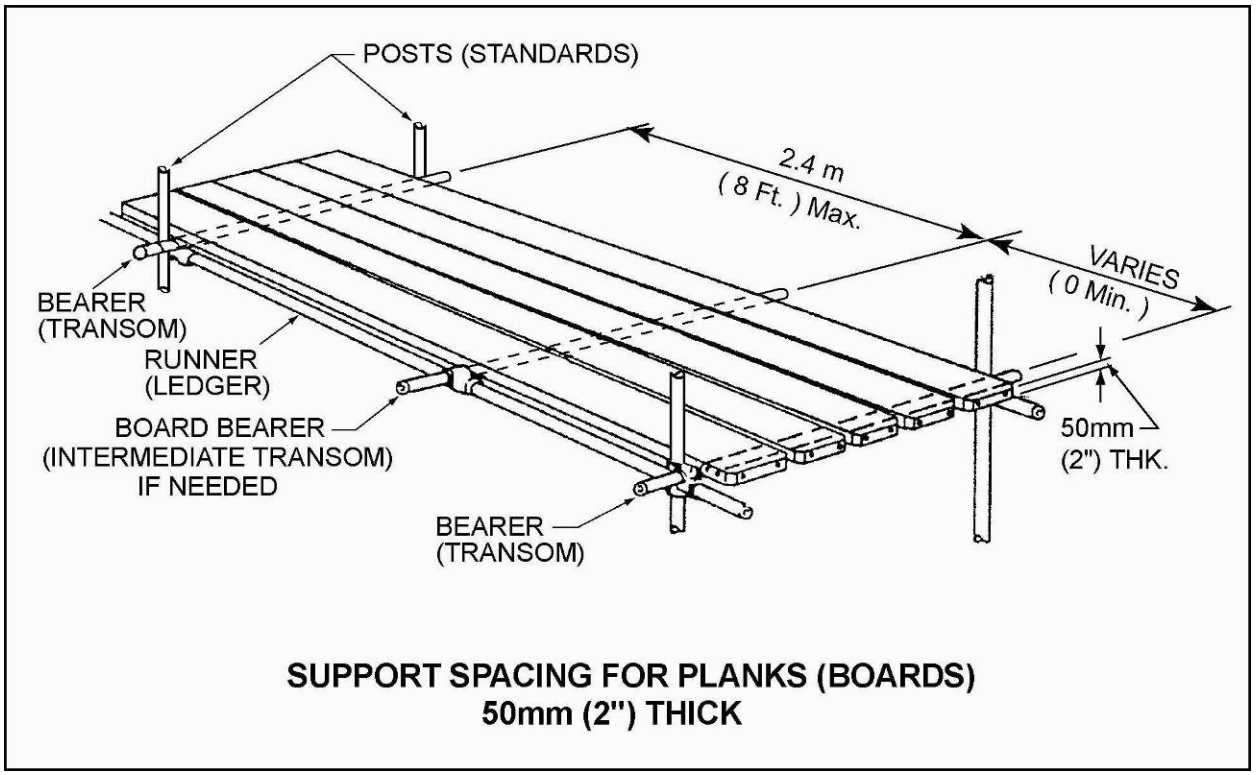

Figure 2.22

Saudi Aramco: Company General Use

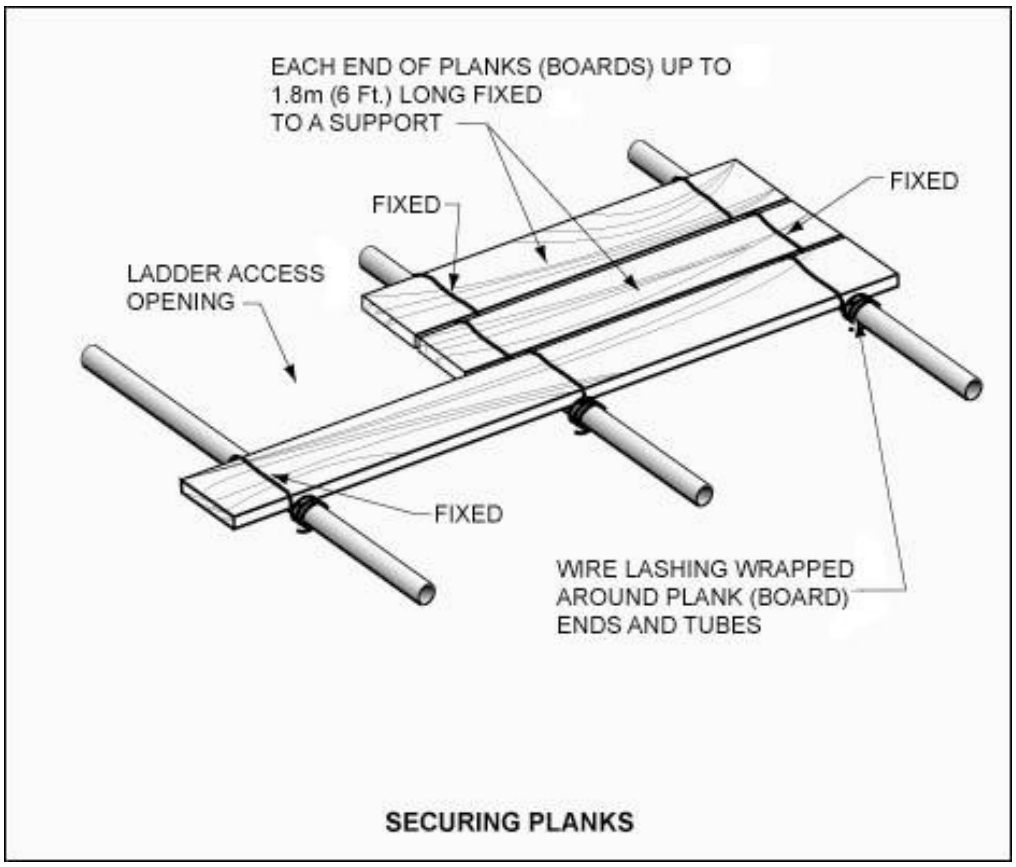

Figure 2.23

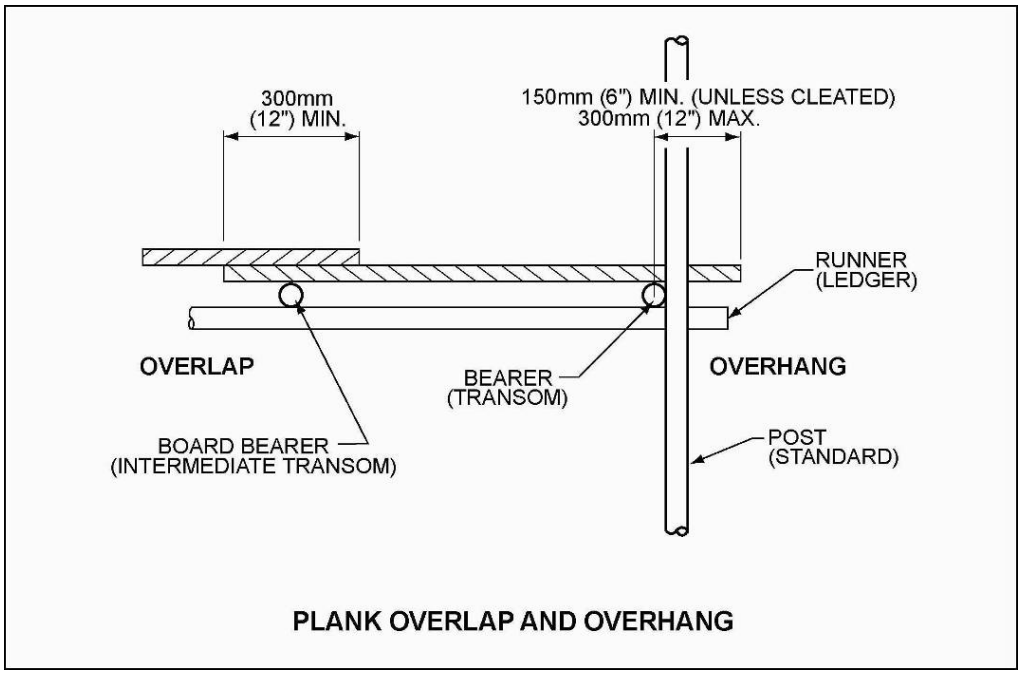

Figure 2.24

Saudi Aramco: Company General Use

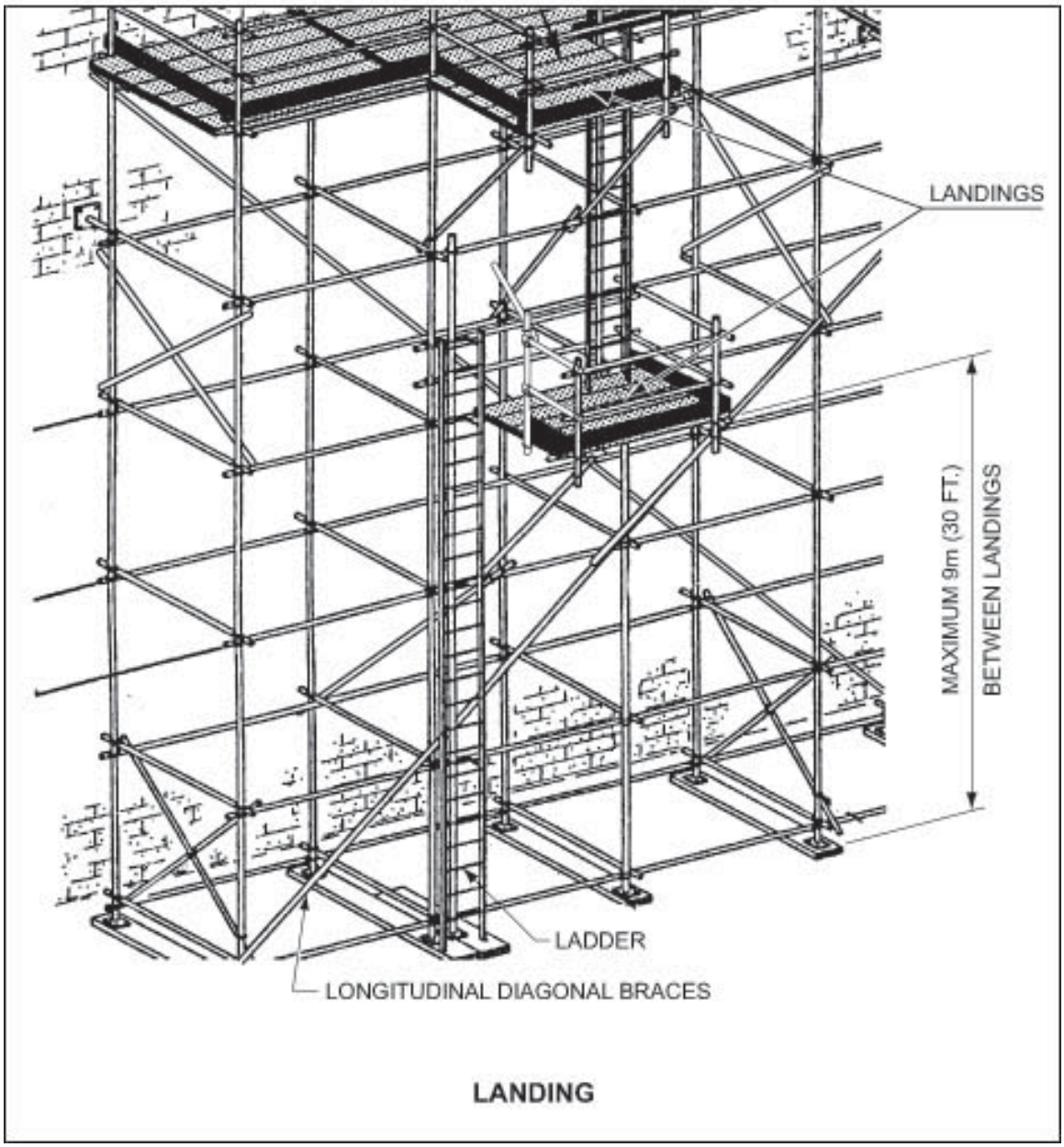

Figure 2.25

Saudi Aramco: Company General Use

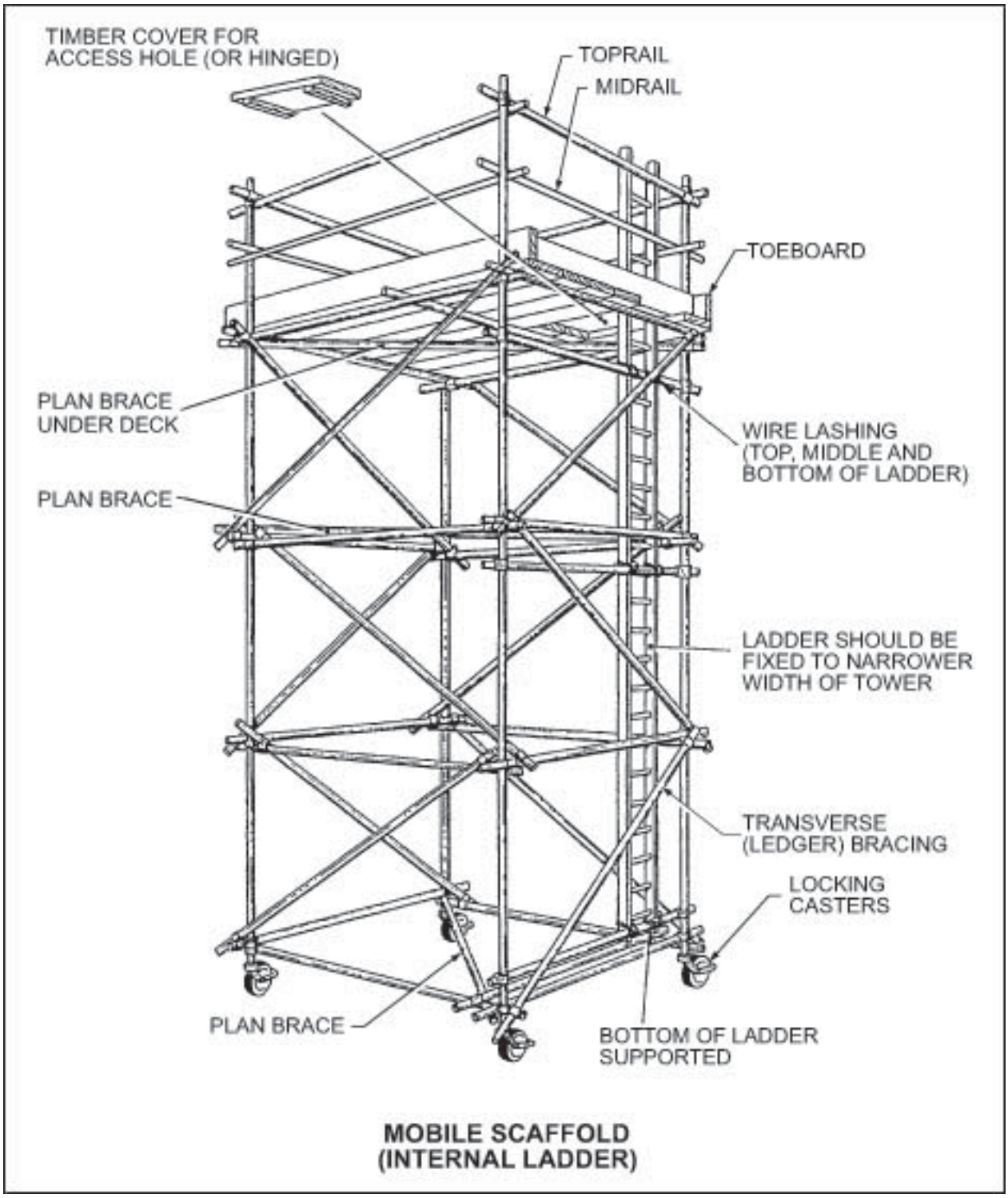

Figure 2.26

Saudi Aramco: Company General Use

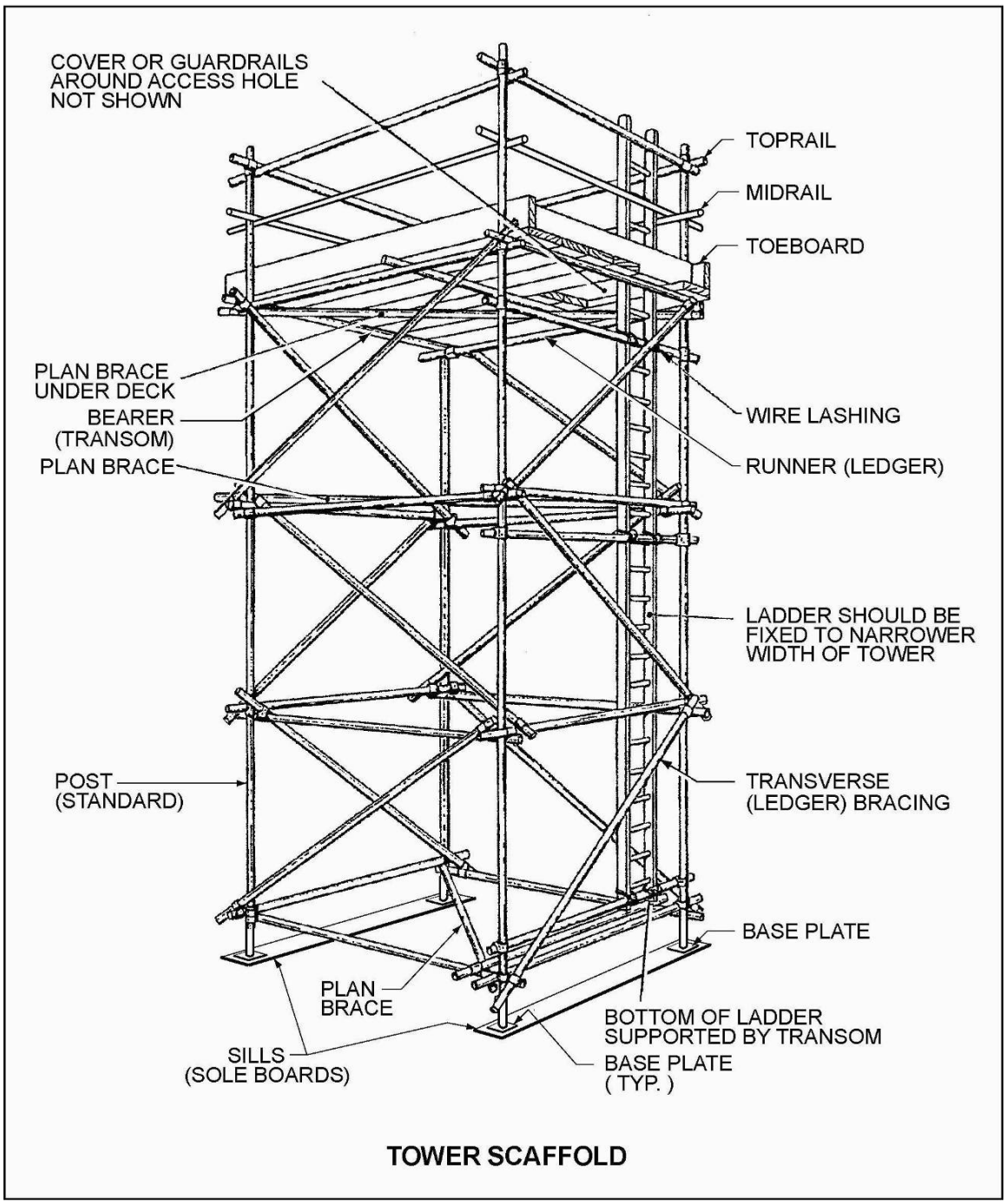

Figure 2.27

Saudi Aramco: Company General Use

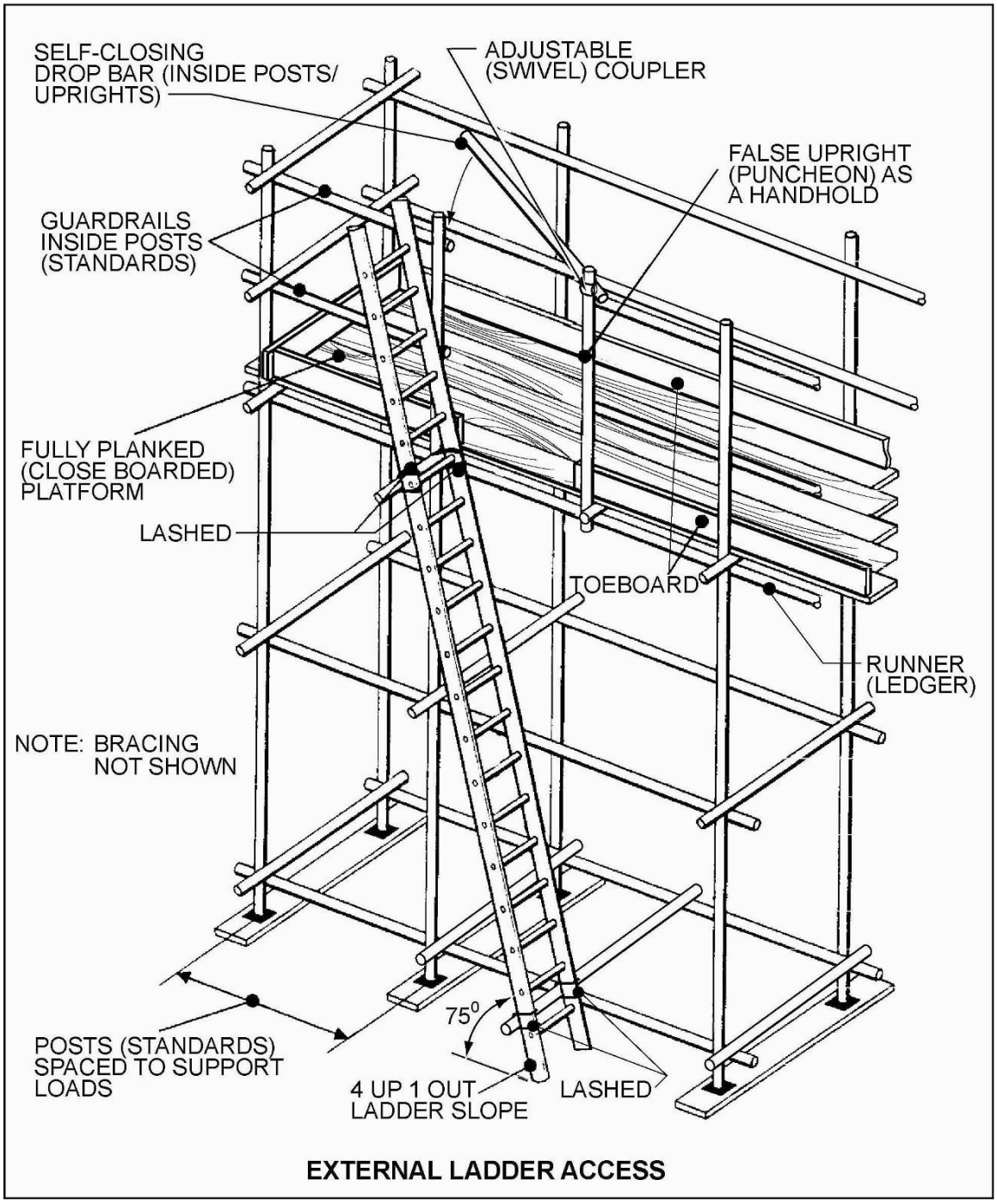

Figure 2.28

Saudi Aramco: Company General Use

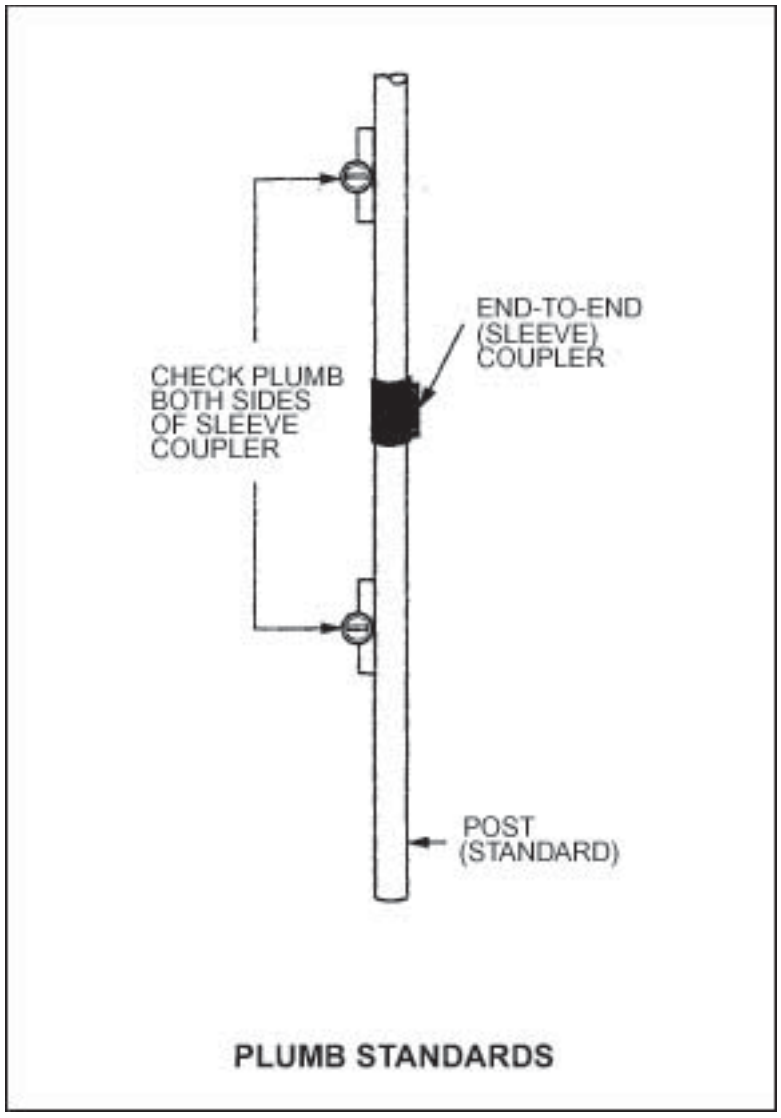

Figure 2.29

Saudi Aramco: Company General Use

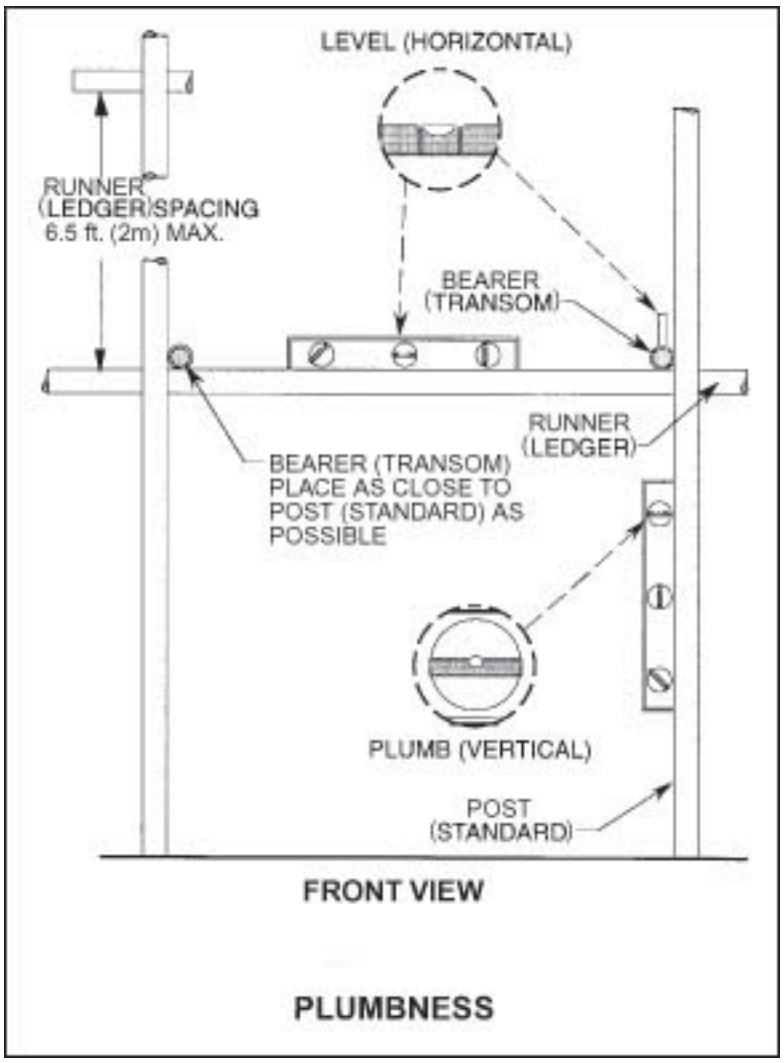

Figure 2.30

Saudi Aramco: Company General Use

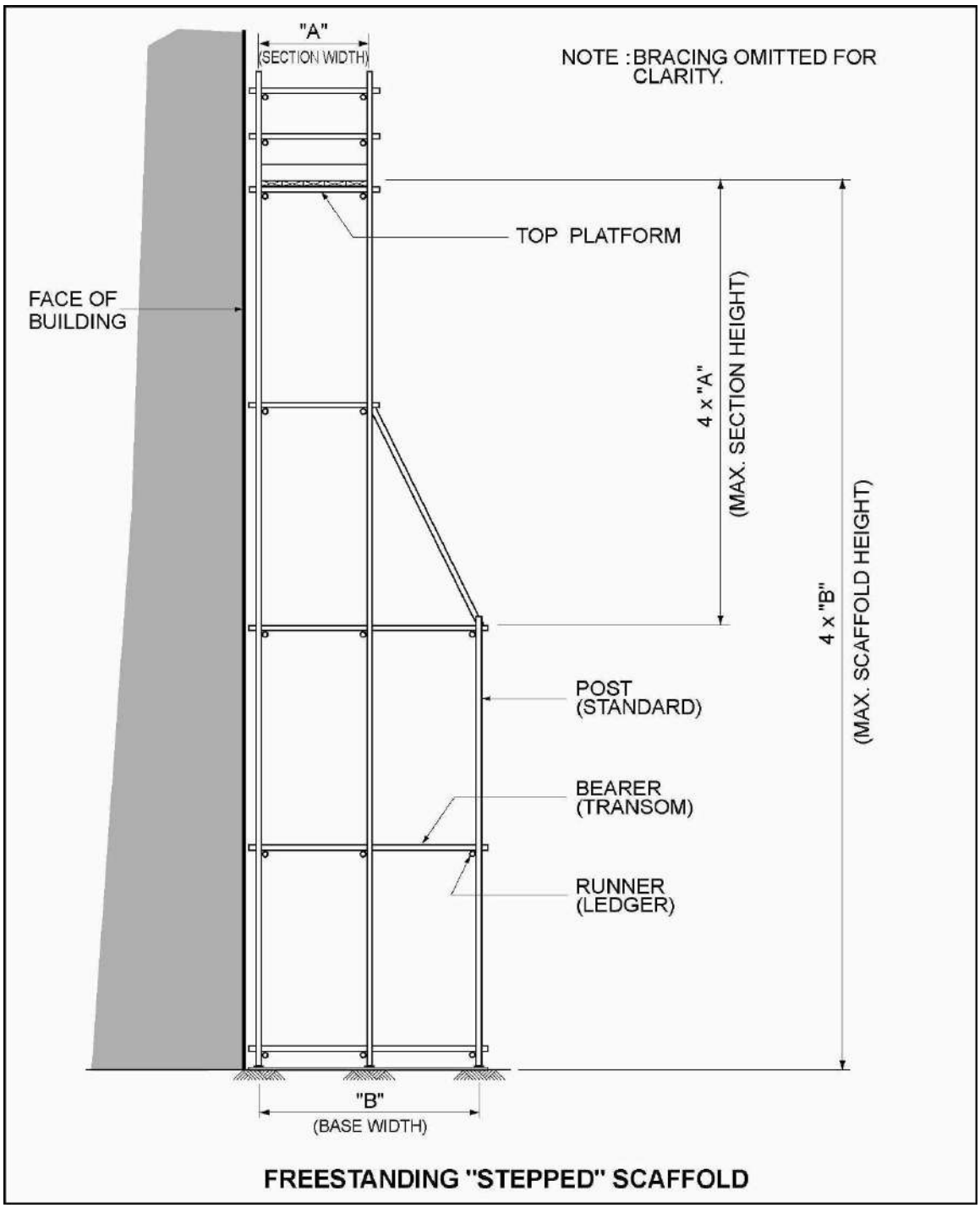

Figure 2.31

Saudi Aramco: Company General Use

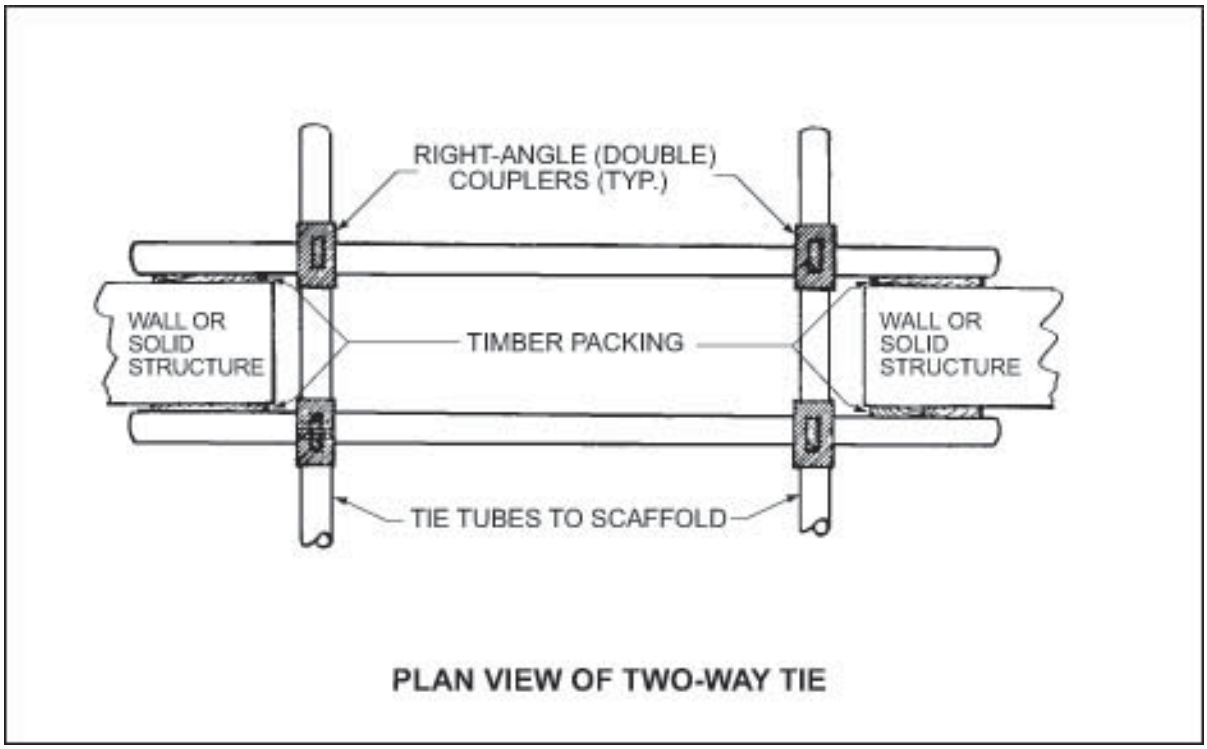

Figure 2.32

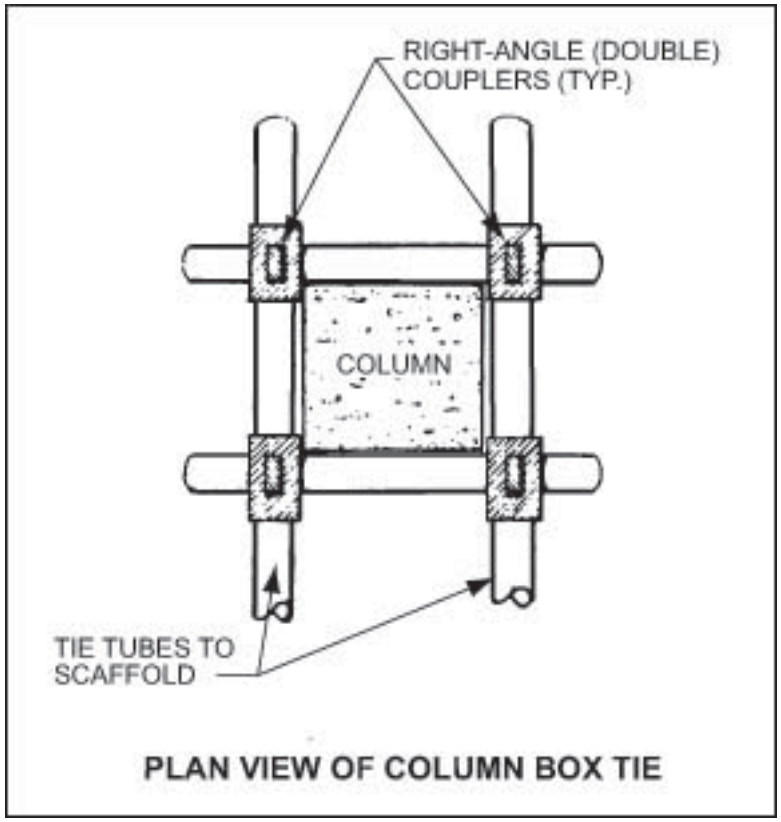

Figure 2.33

Saudi Aramco: Company General Use

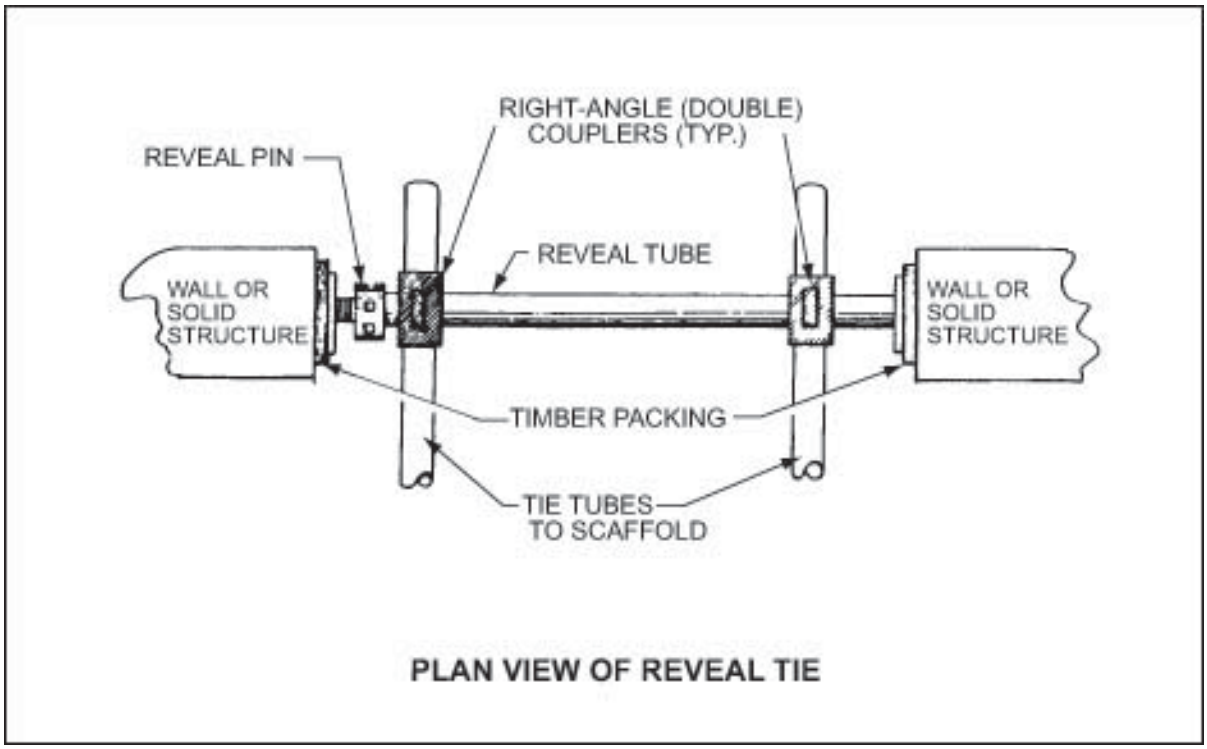

Figure 2.34

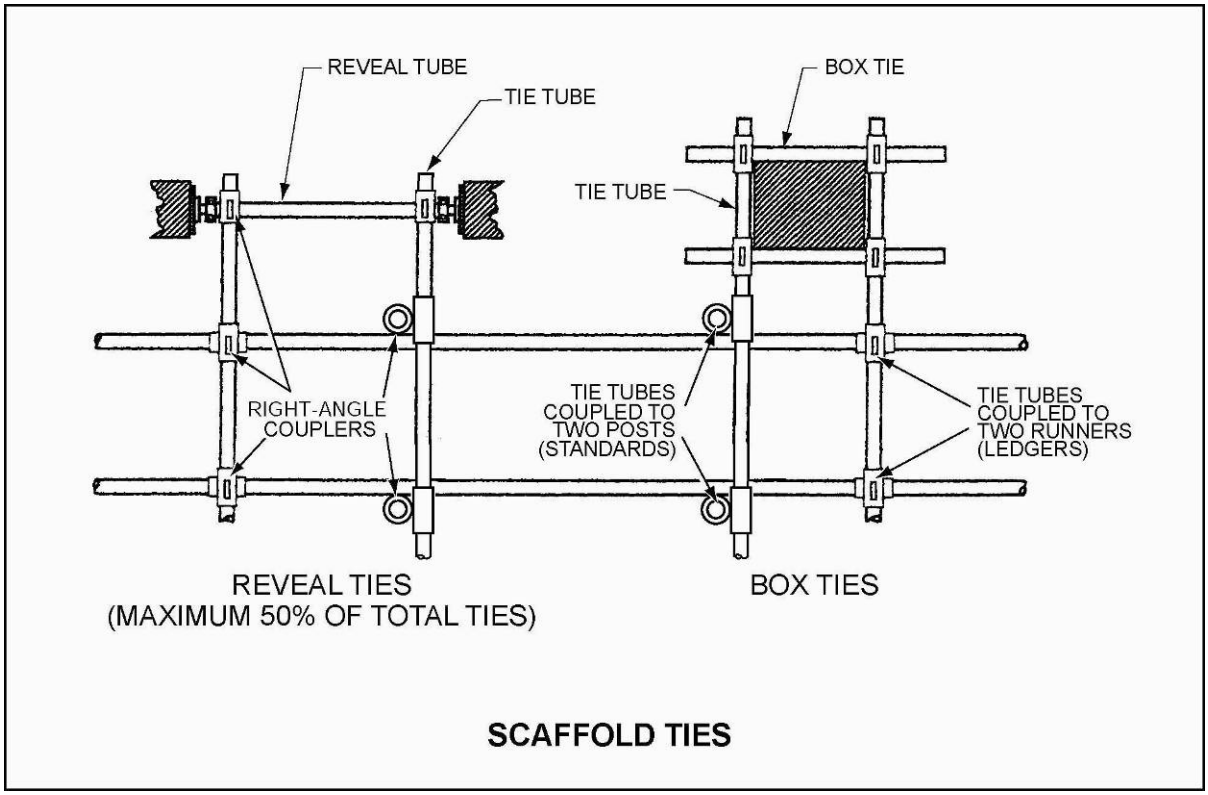

Figure 2.35

Saudi Aramco: Company General Use

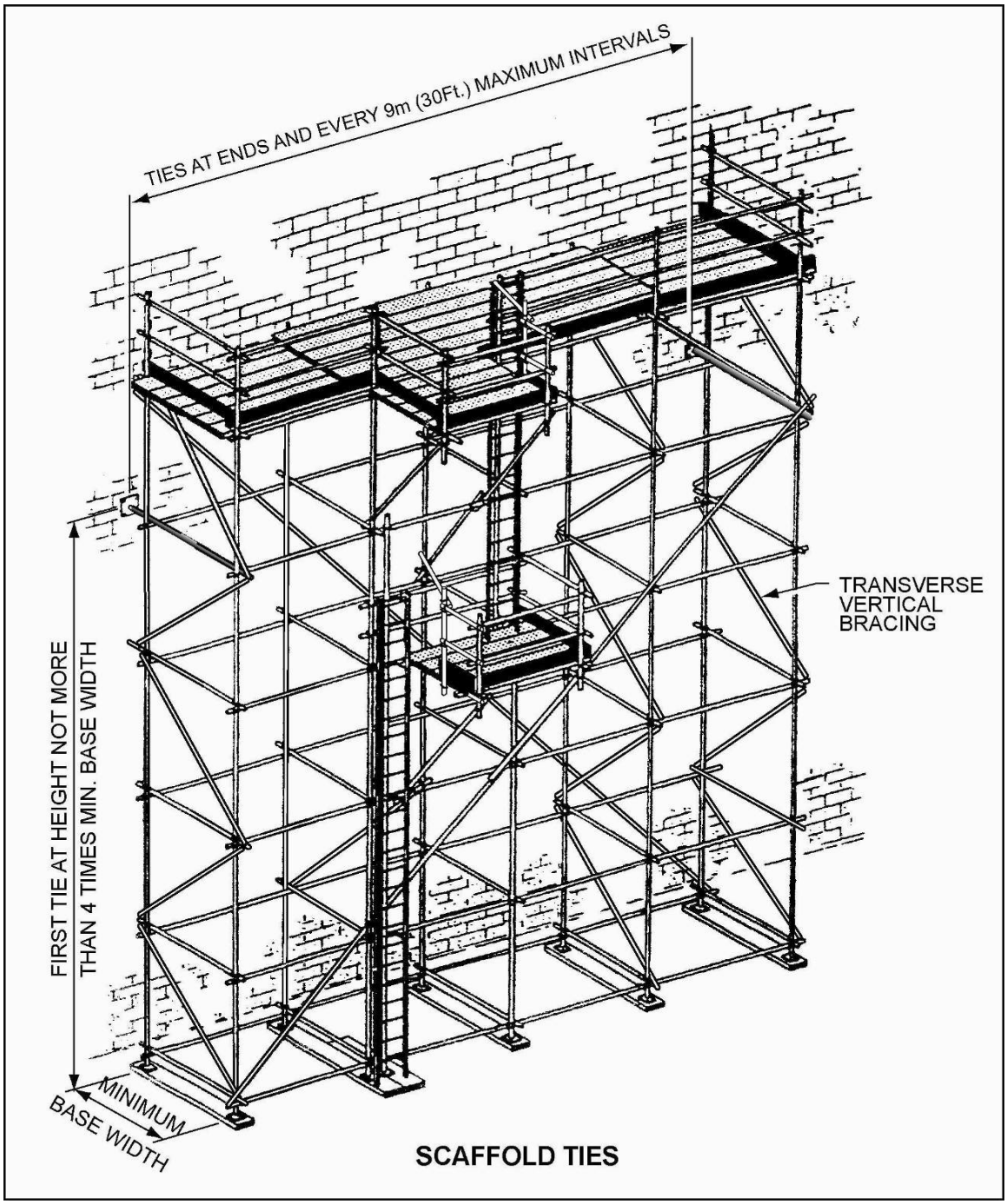

Figure 2.36

Saudi Aramco: Company General Use

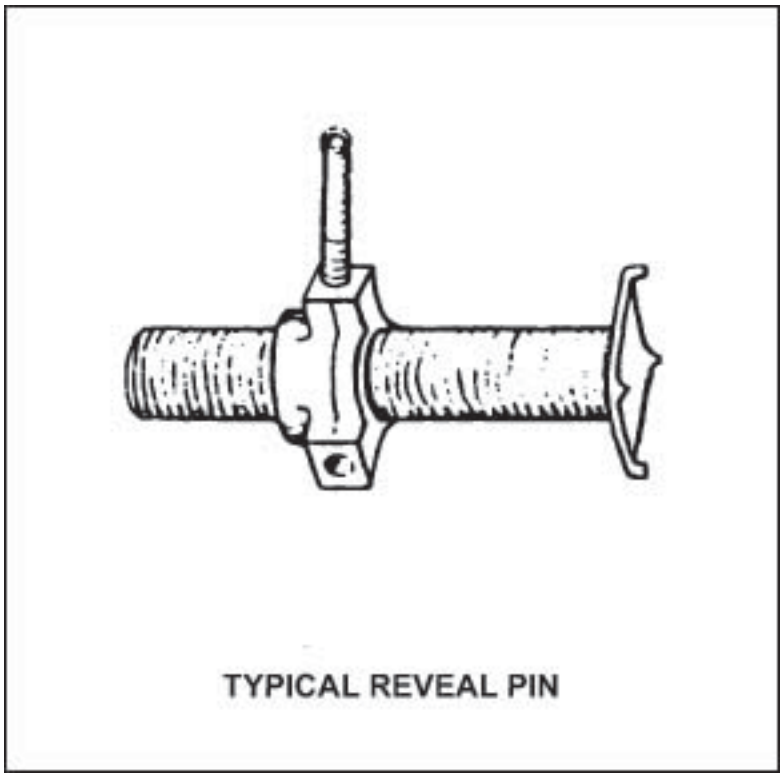

Figure 2.37

Saudi Aramco: Company General Use

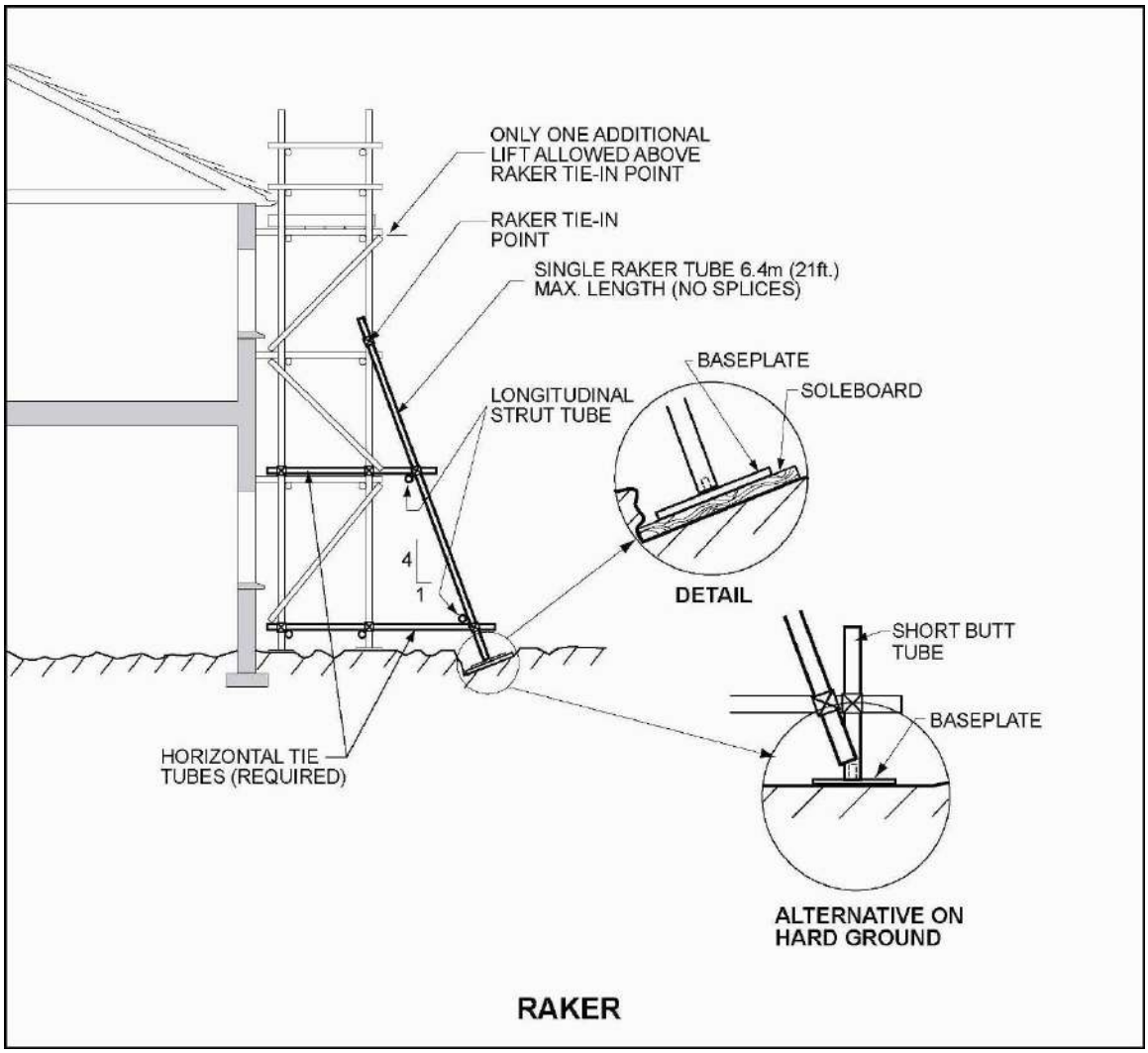

Figure 2.38

Saudi Aramco: Company General Use

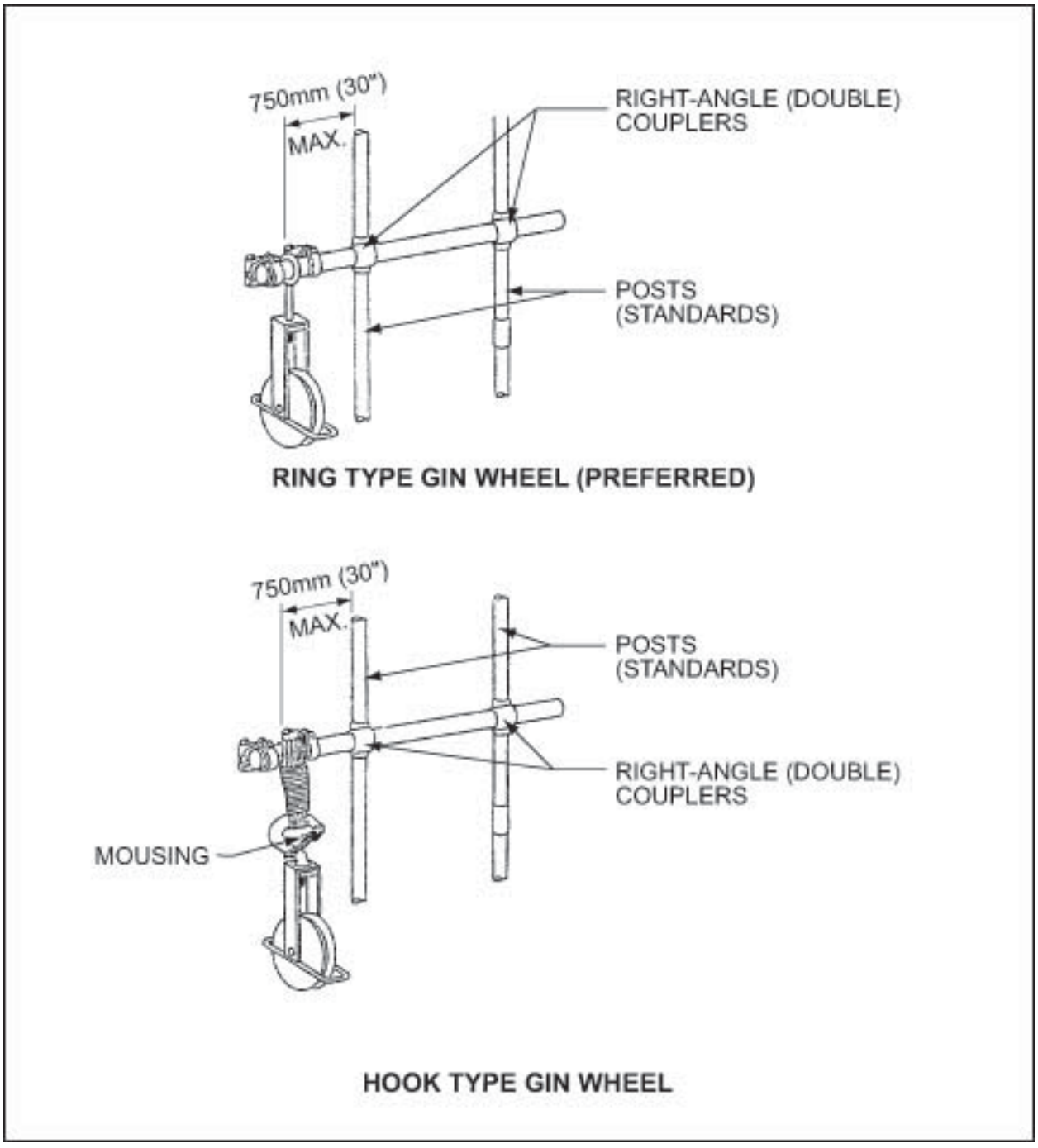

Figure 2.39

Saudi Aramco: Company General Use

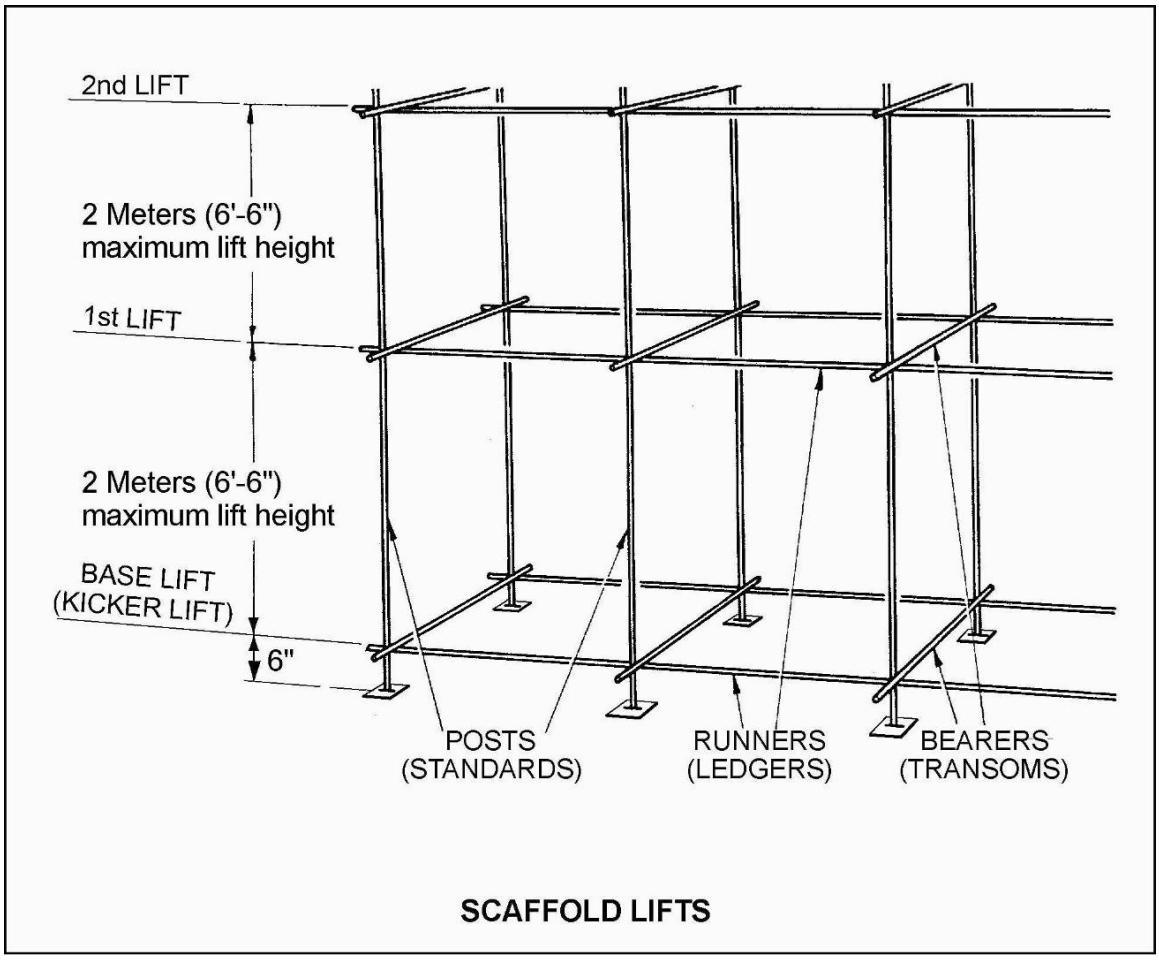

Figure 2.40

Saudi Aramco: Company General Use

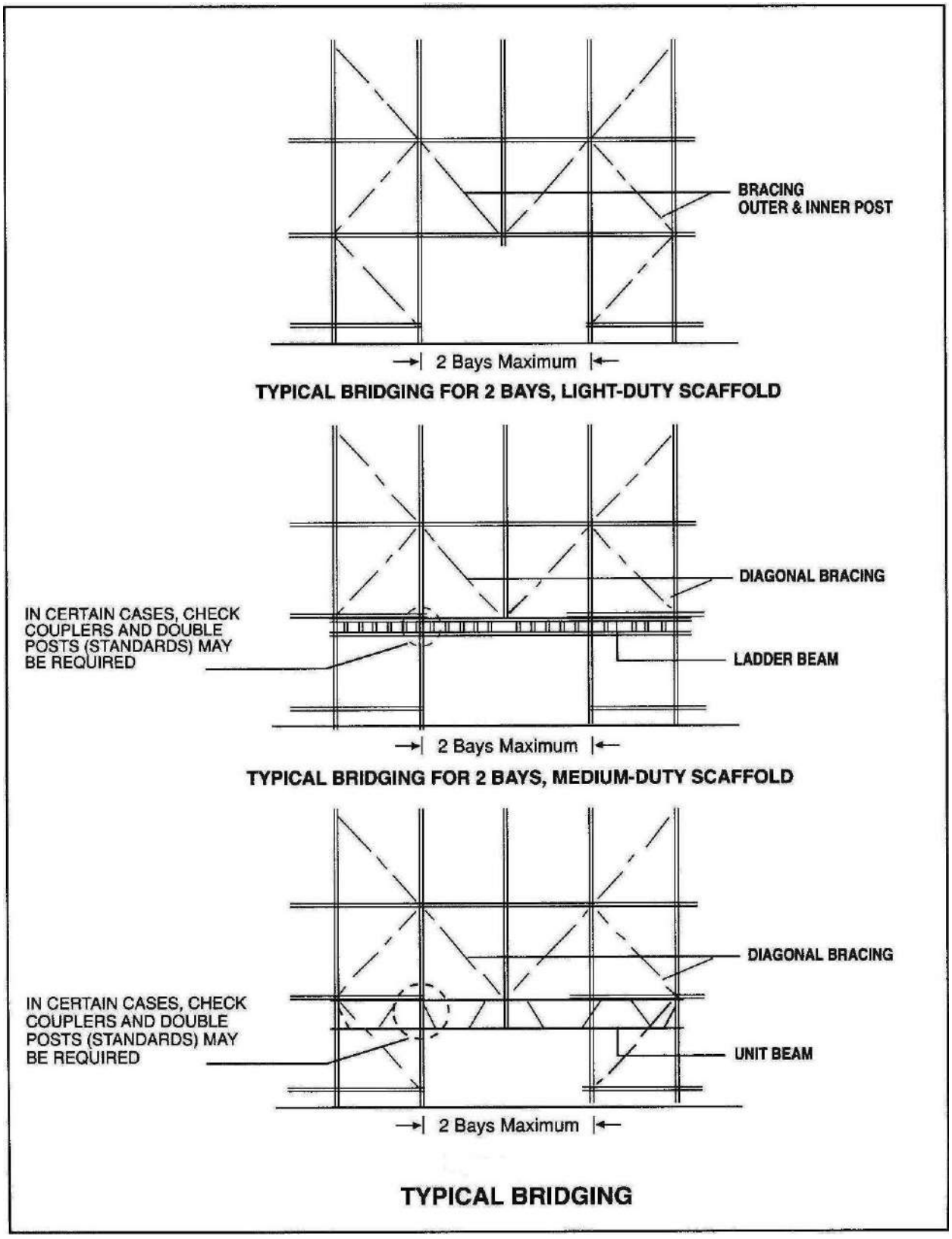

Figure 2.41

Saudi Aramco: Company General Use

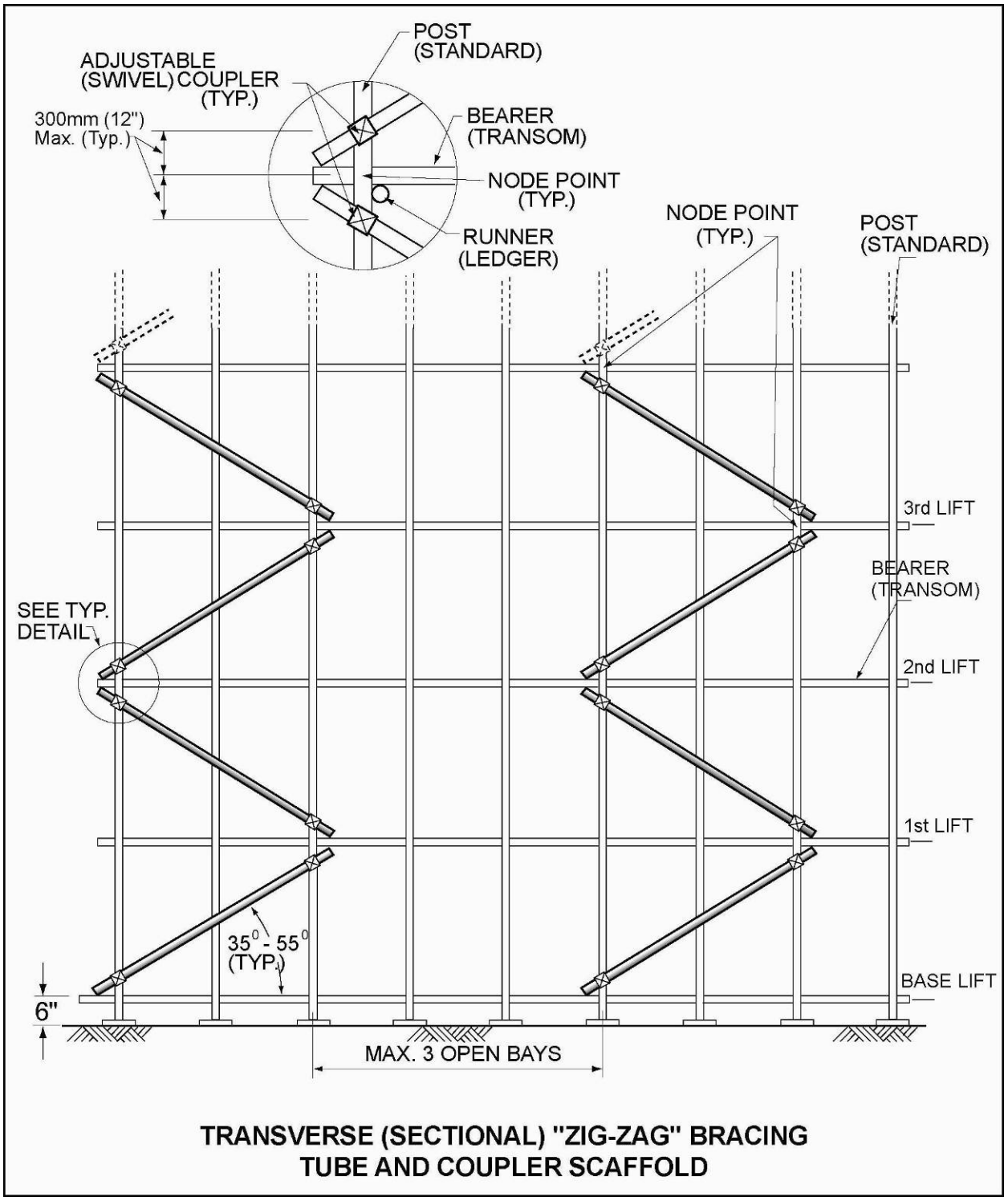

Figure 2.42

Saudi Aramco: Company General Use

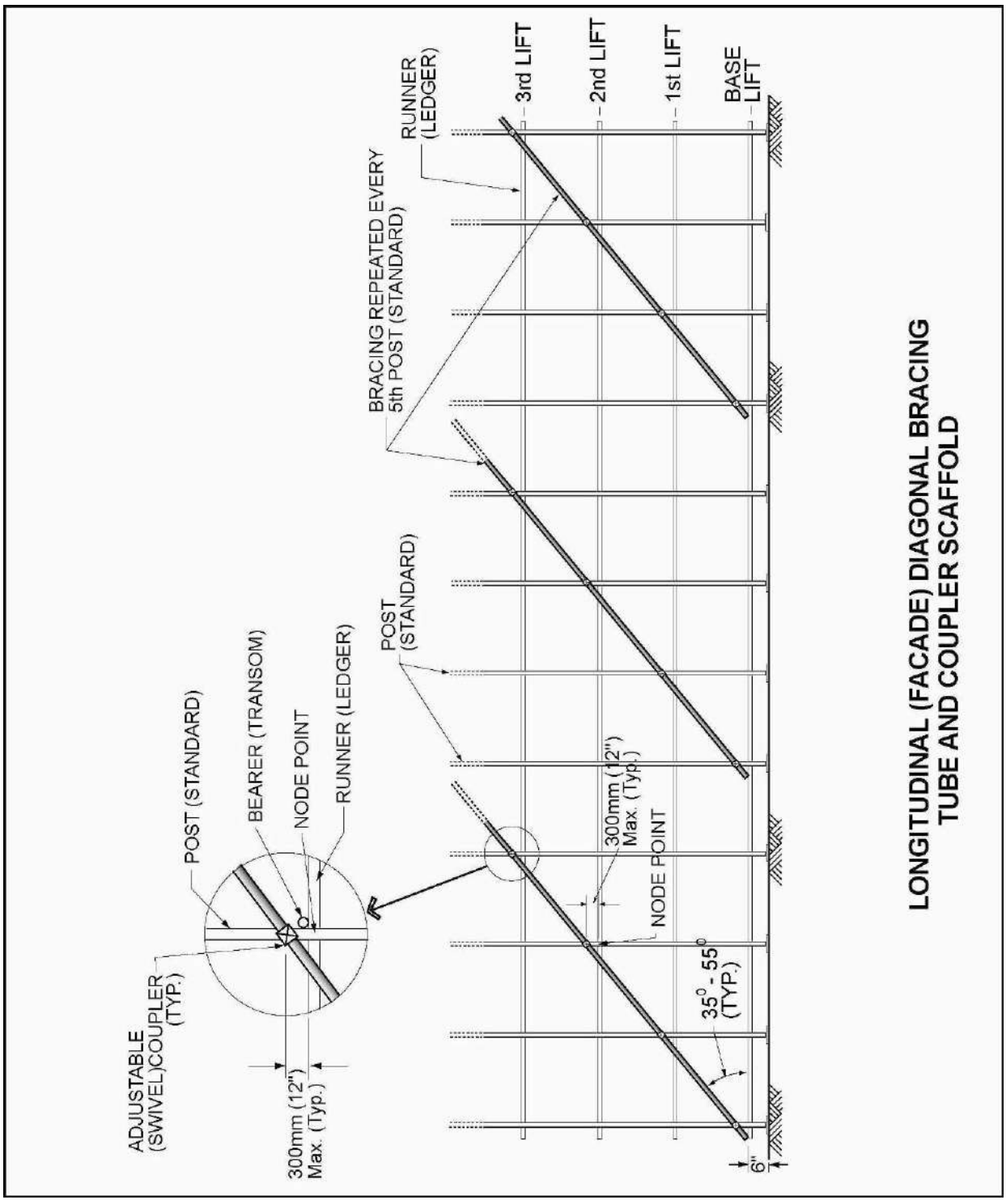

Figure 2.43

Saudi Aramco: Company General Use

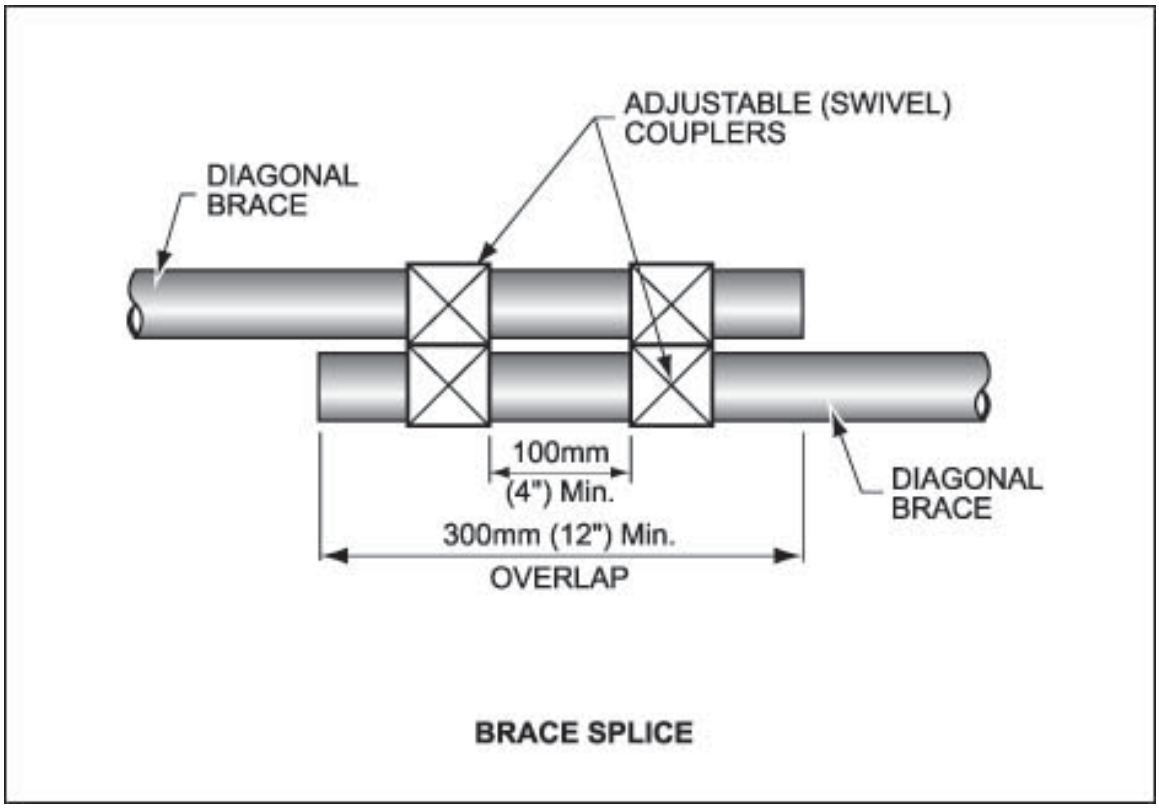

Figure 2.44

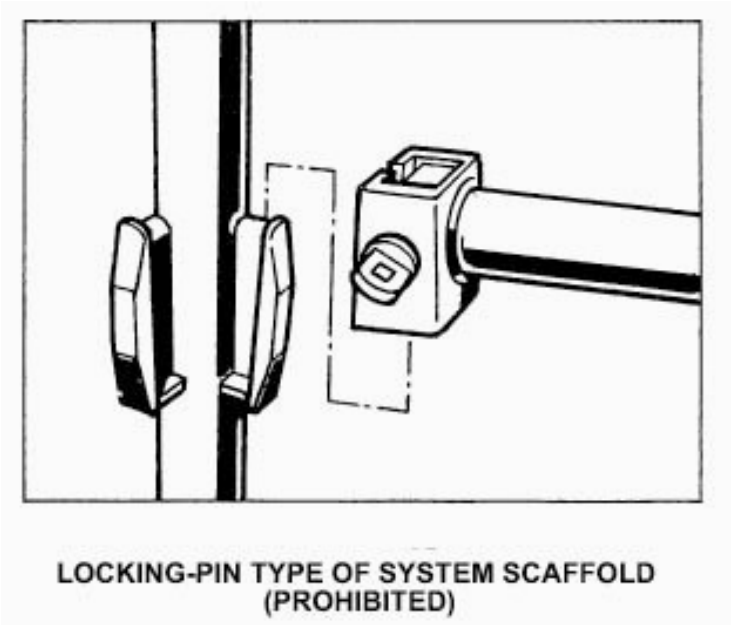

Figure 2.45

Saudi Aramco: Company General Use

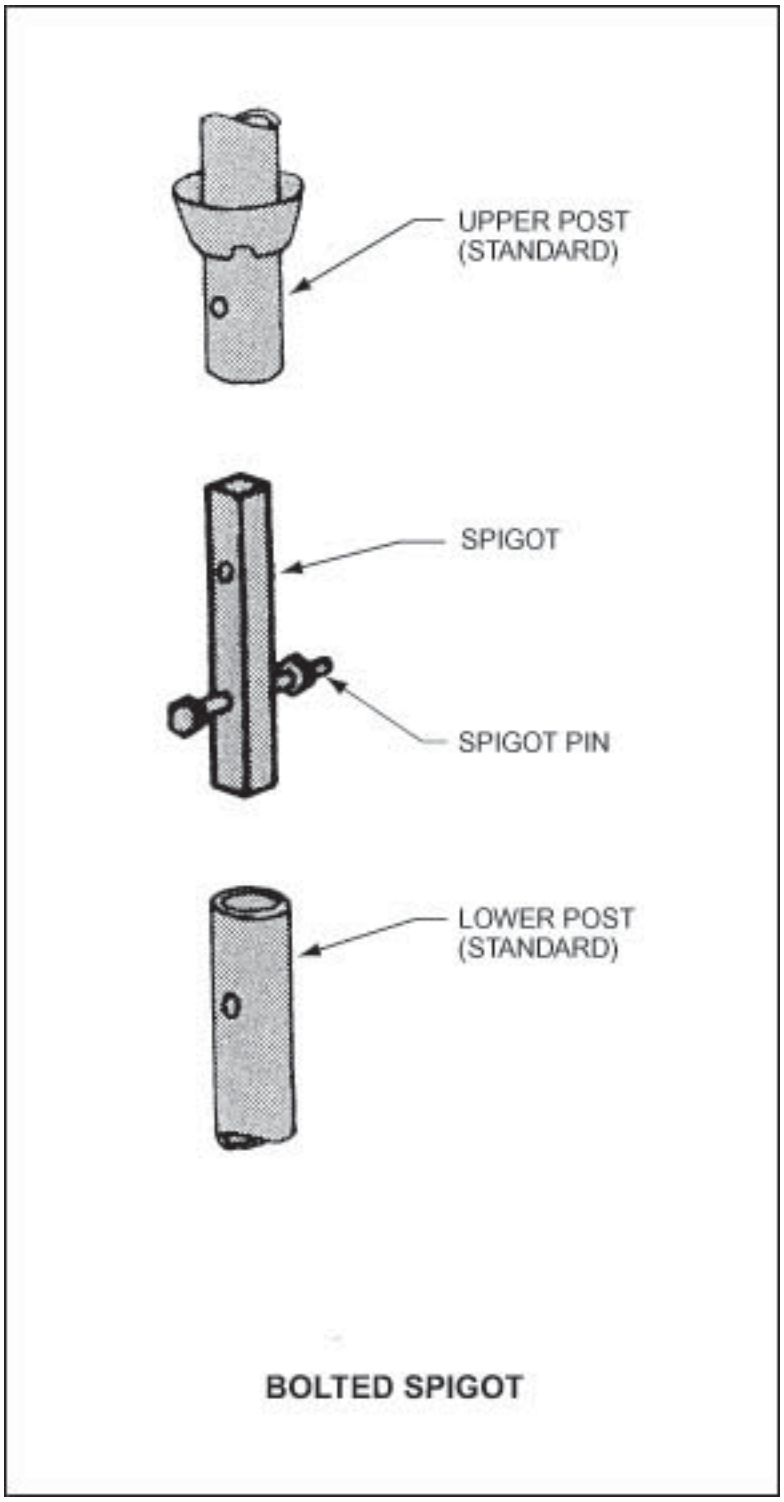

Figure 2.46

Saudi Aramco: Company General Use

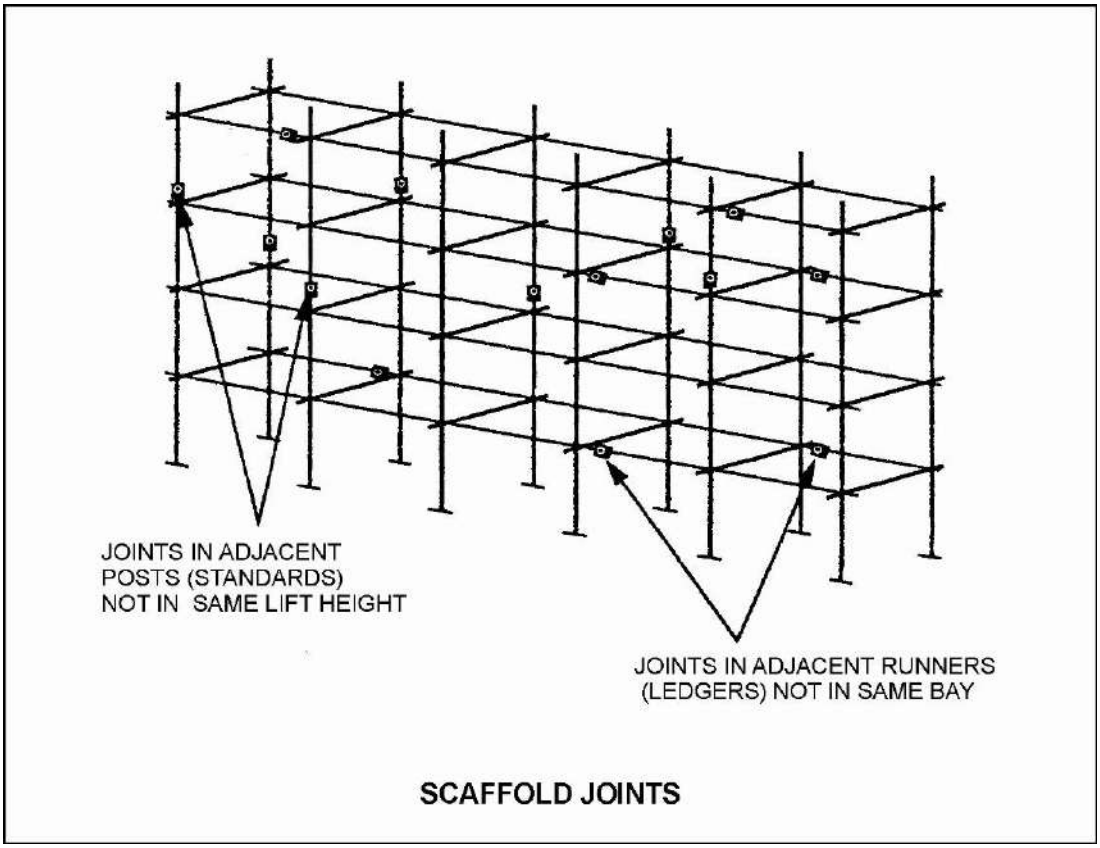

Figure 2.47

Saudi Aramco: Company General Use

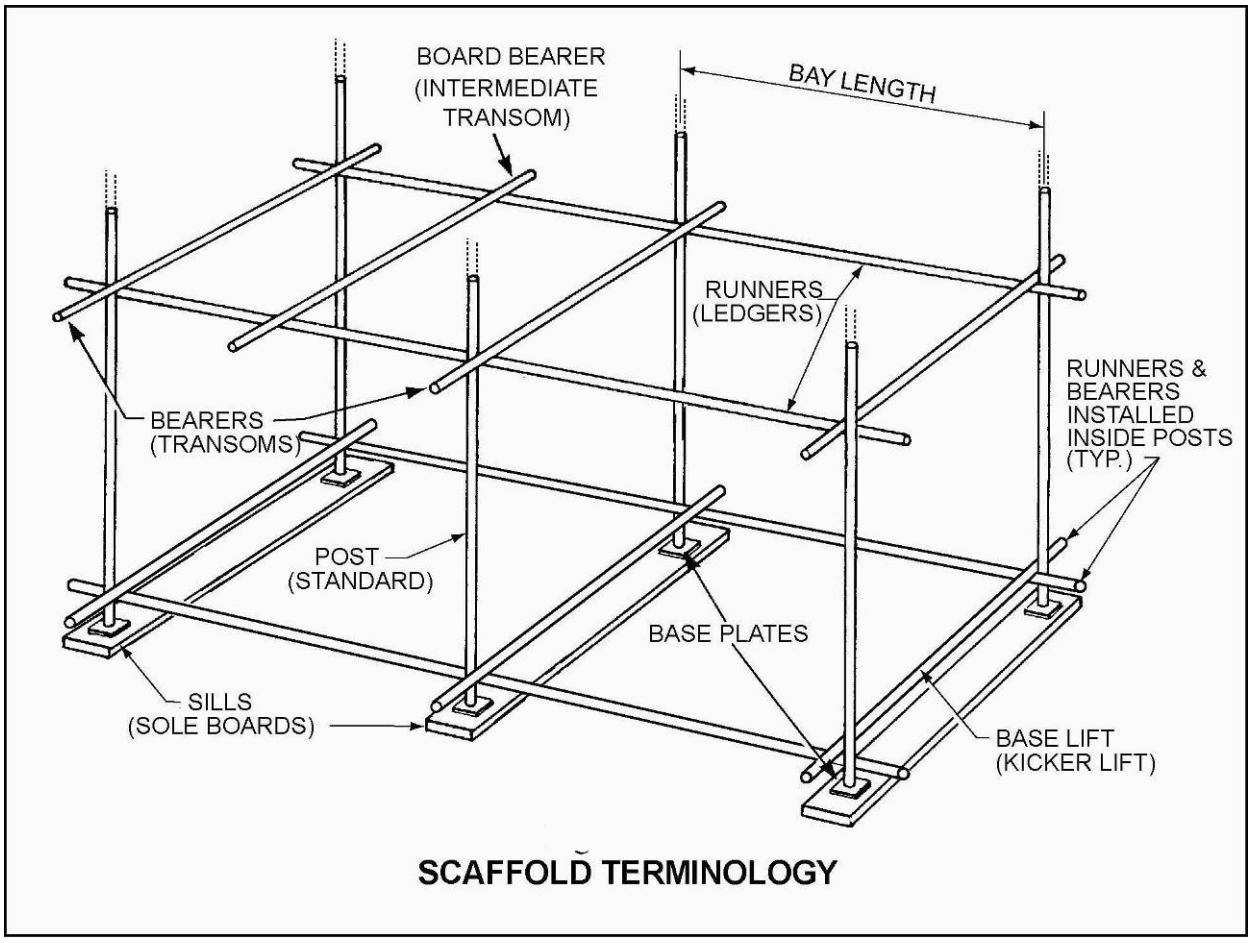

Figure 2.48

Saudi Aramco: Company General Use

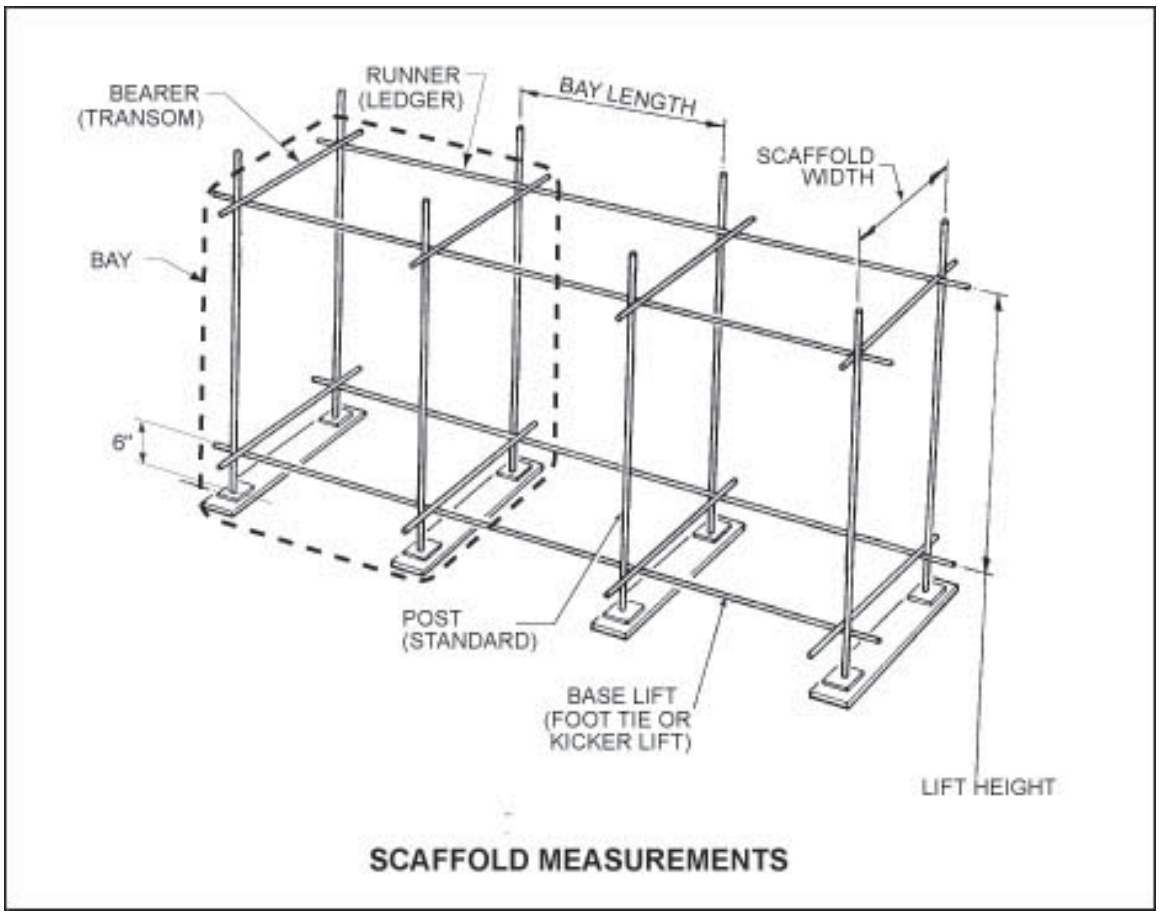

Figure 2.49

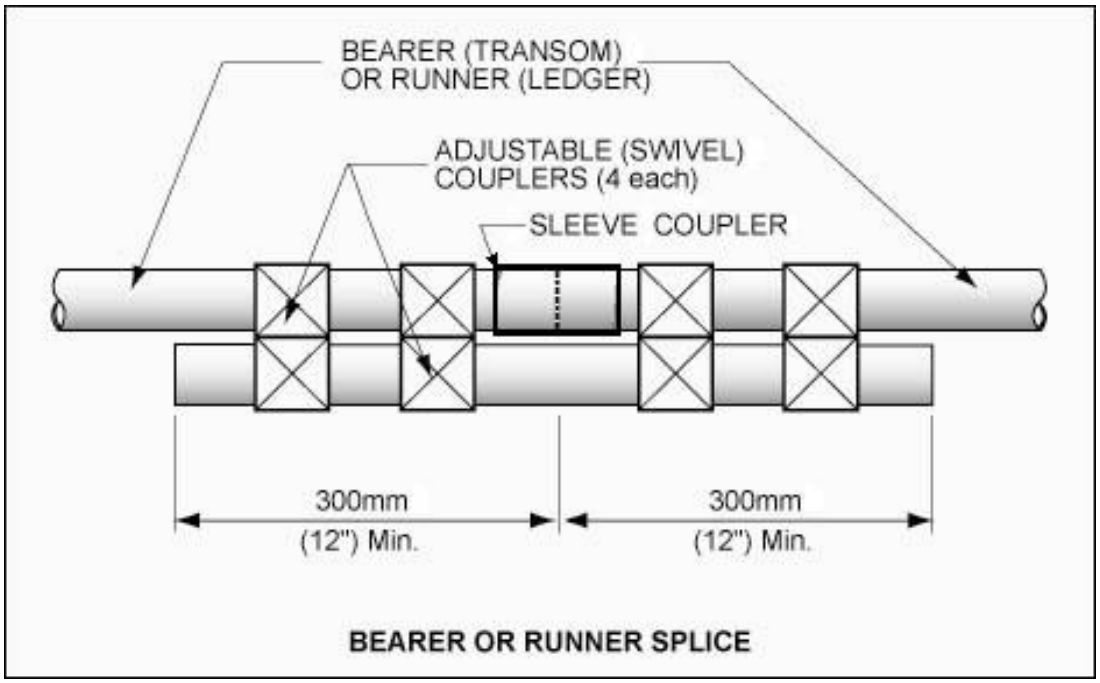

Figure 2.50

Saudi Aramco: Company General Use

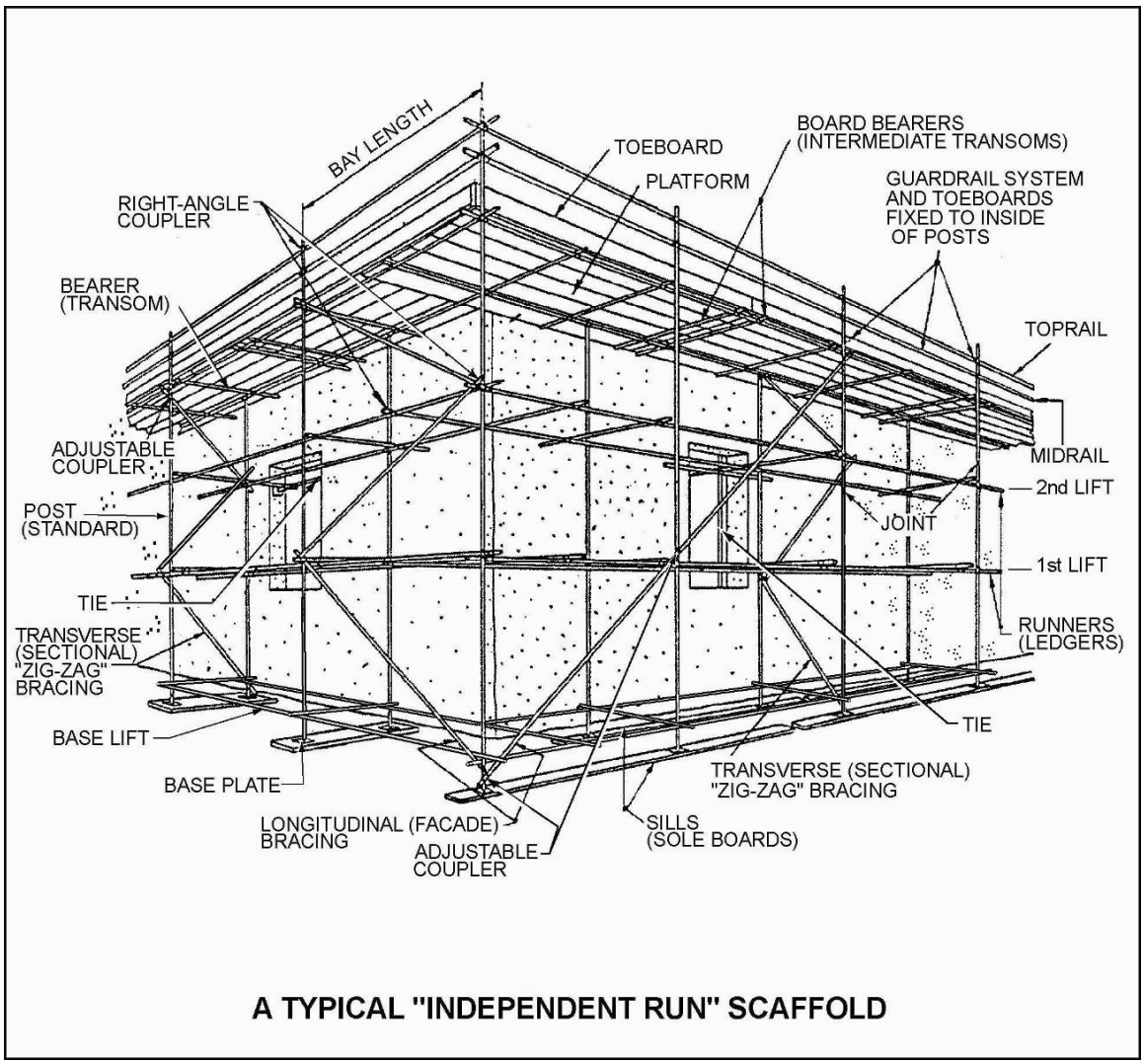

Figure 2.51

Saudi Aramco: Company General Use

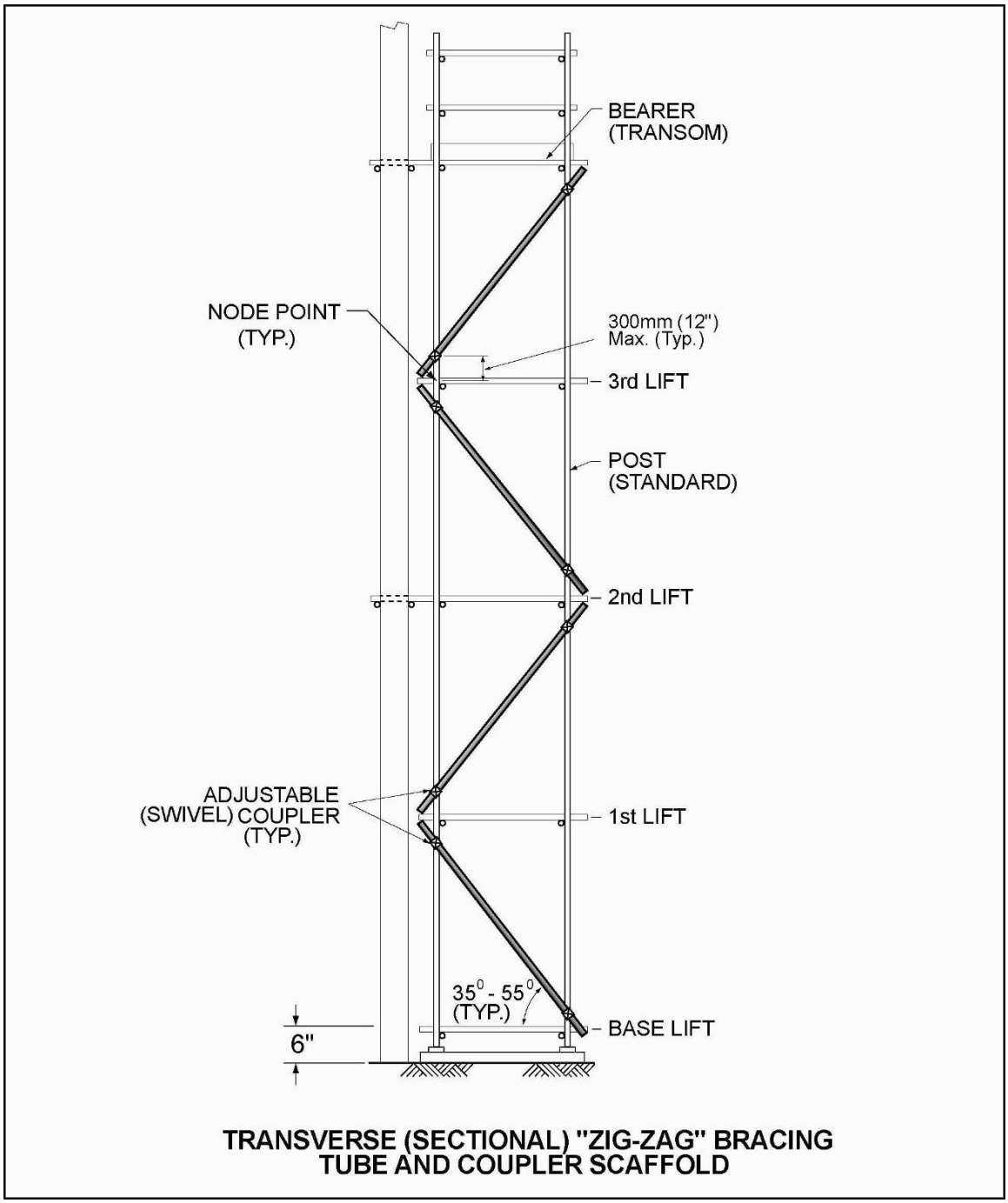

Figure 2.52

Saudi Aramco: Company General Use

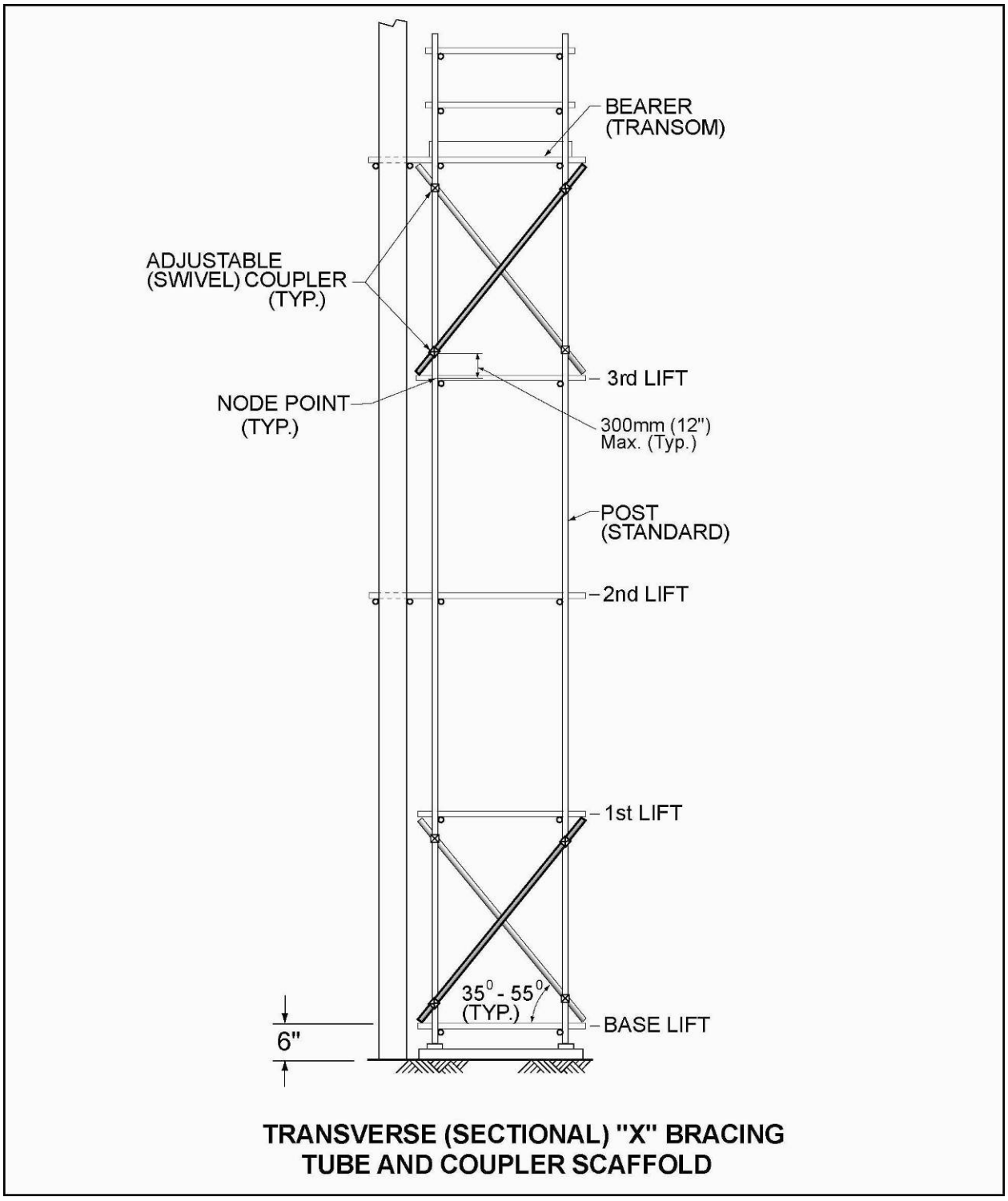

Figure 2.53

Saudi Aramco: Company General Use

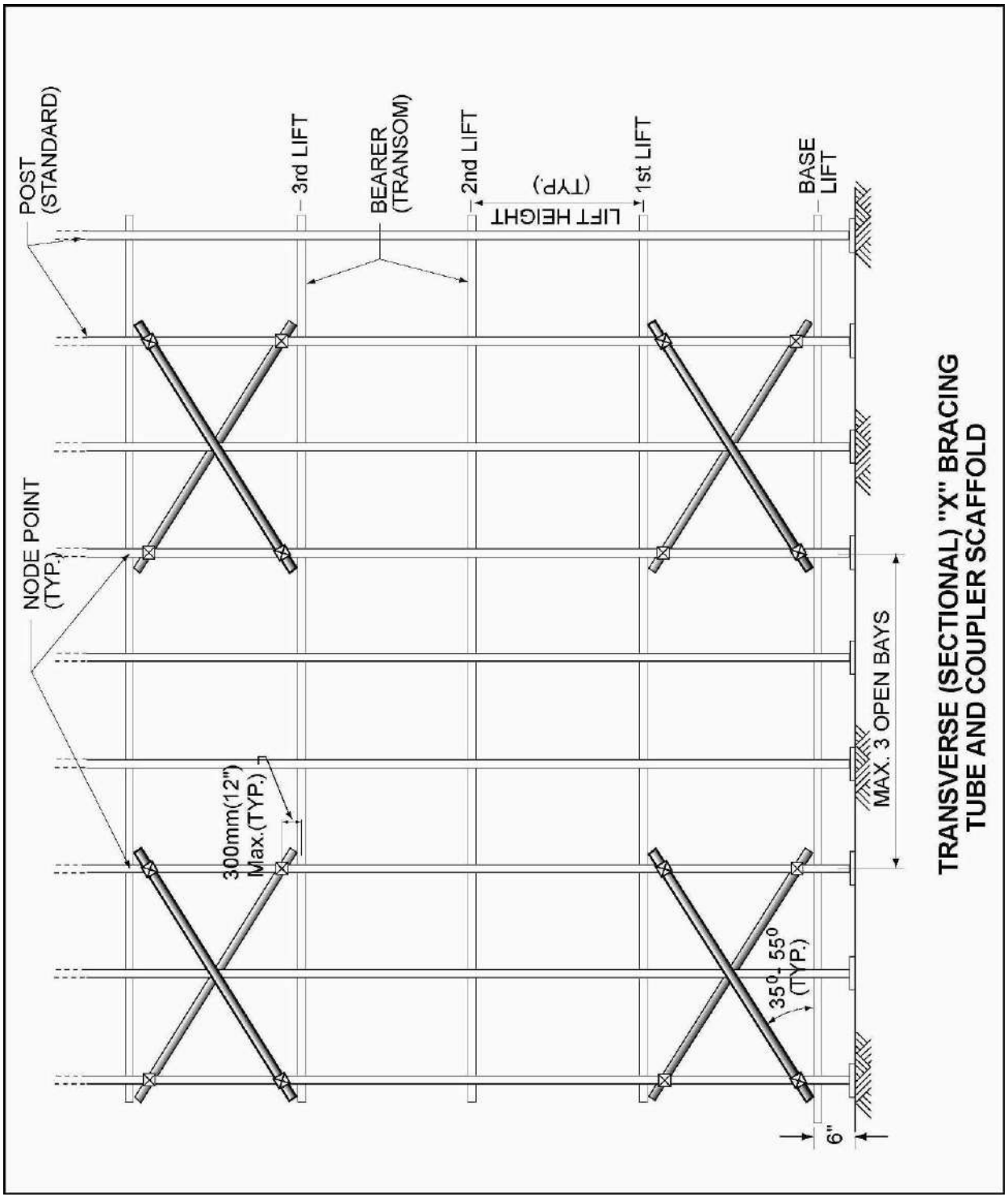

Figure 2.54

Saudi Aramco: Company General Use

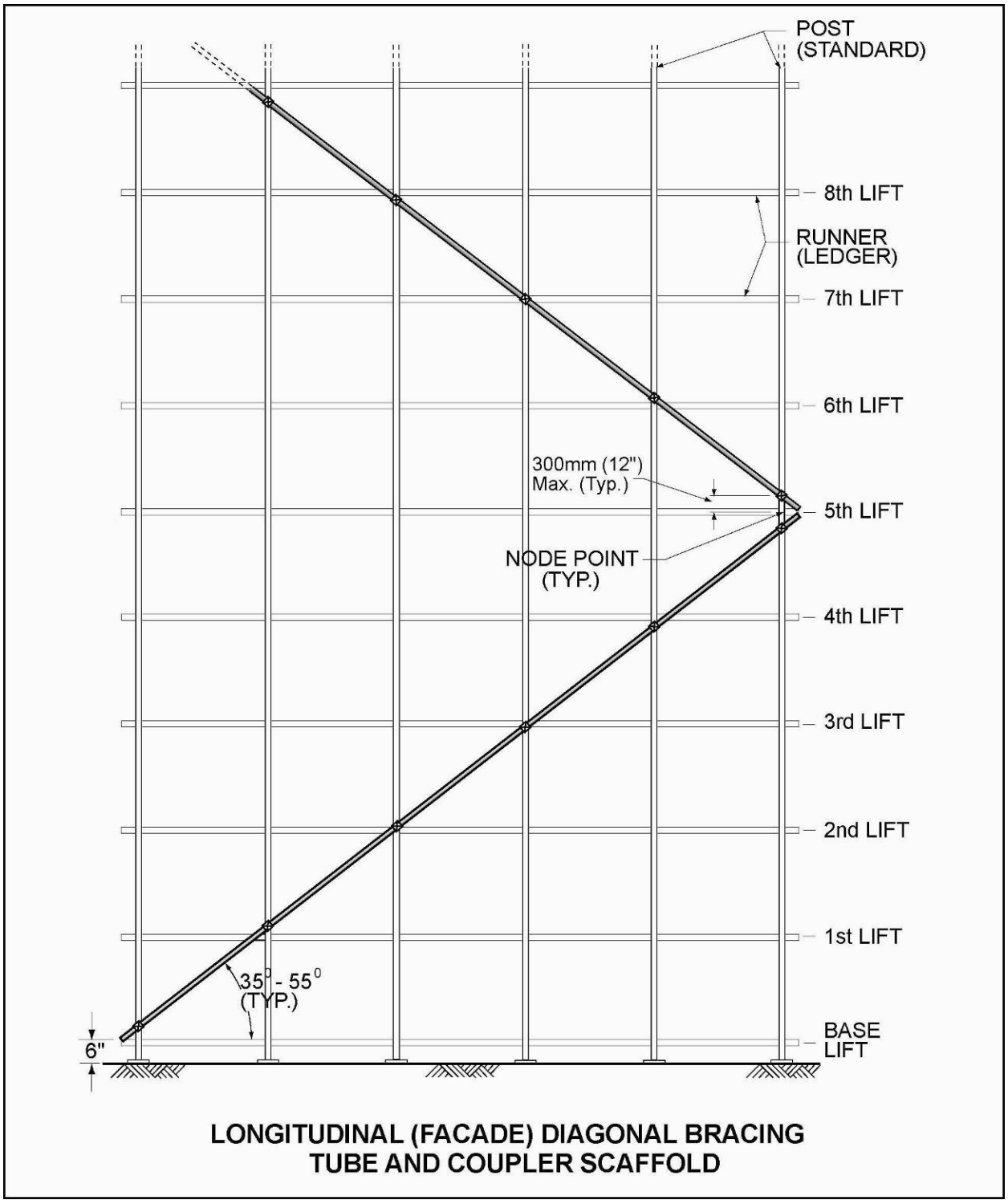

Figure 2.55

Saudi Aramco: Company General Use

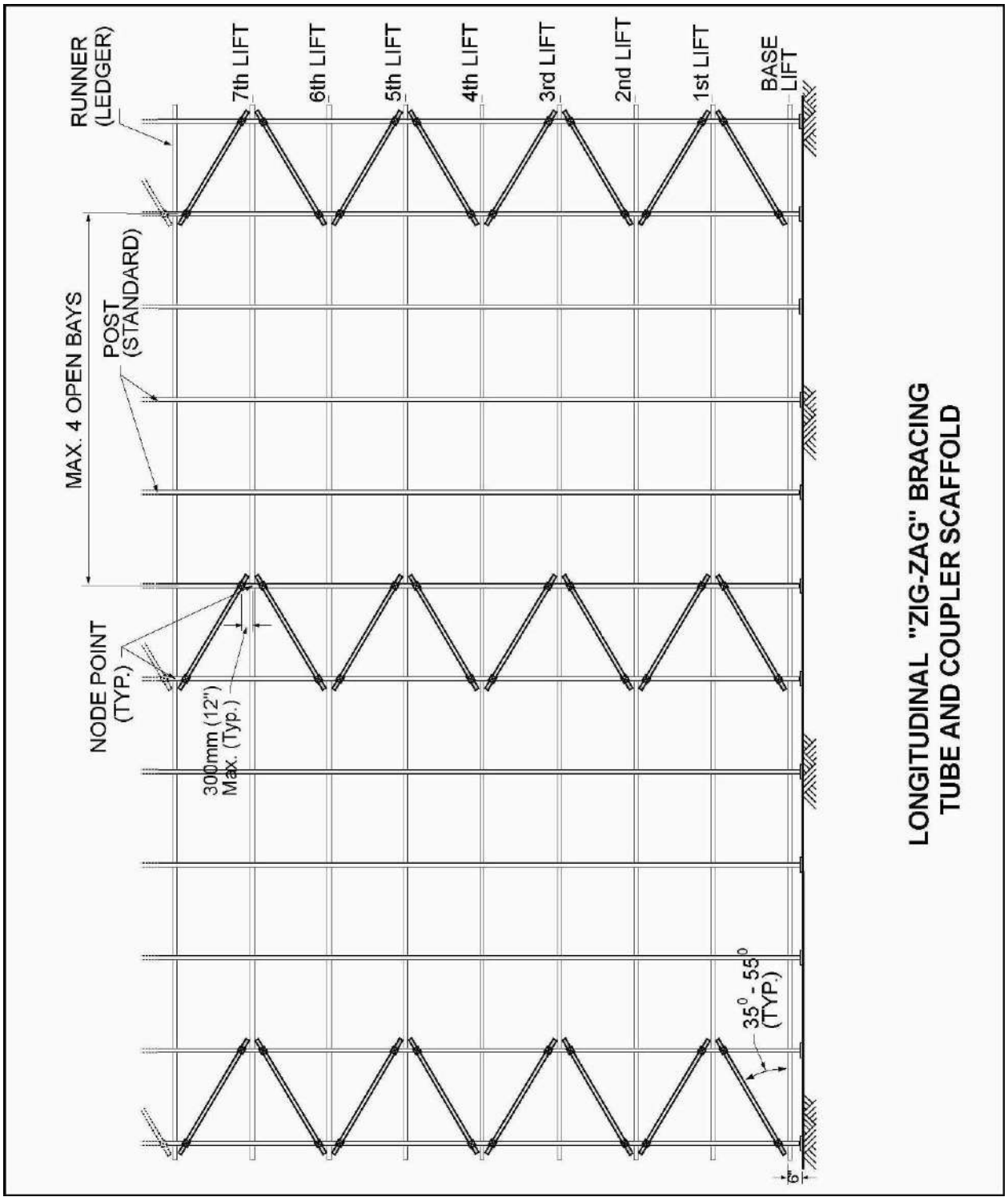

Figure 2.56

Saudi Aramco: Company General Use

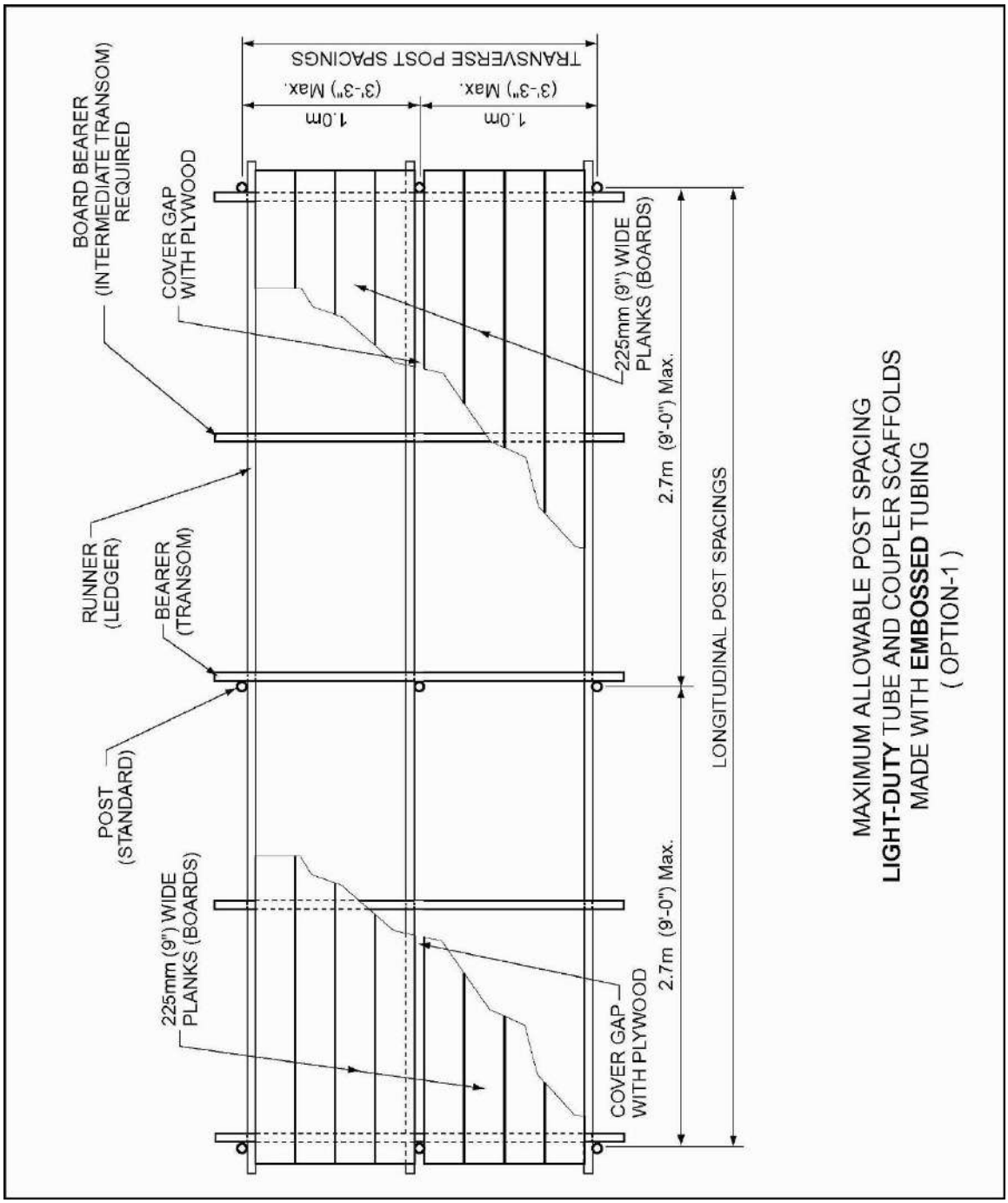

Figure 2.57

Saudi Aramco: Company General Use

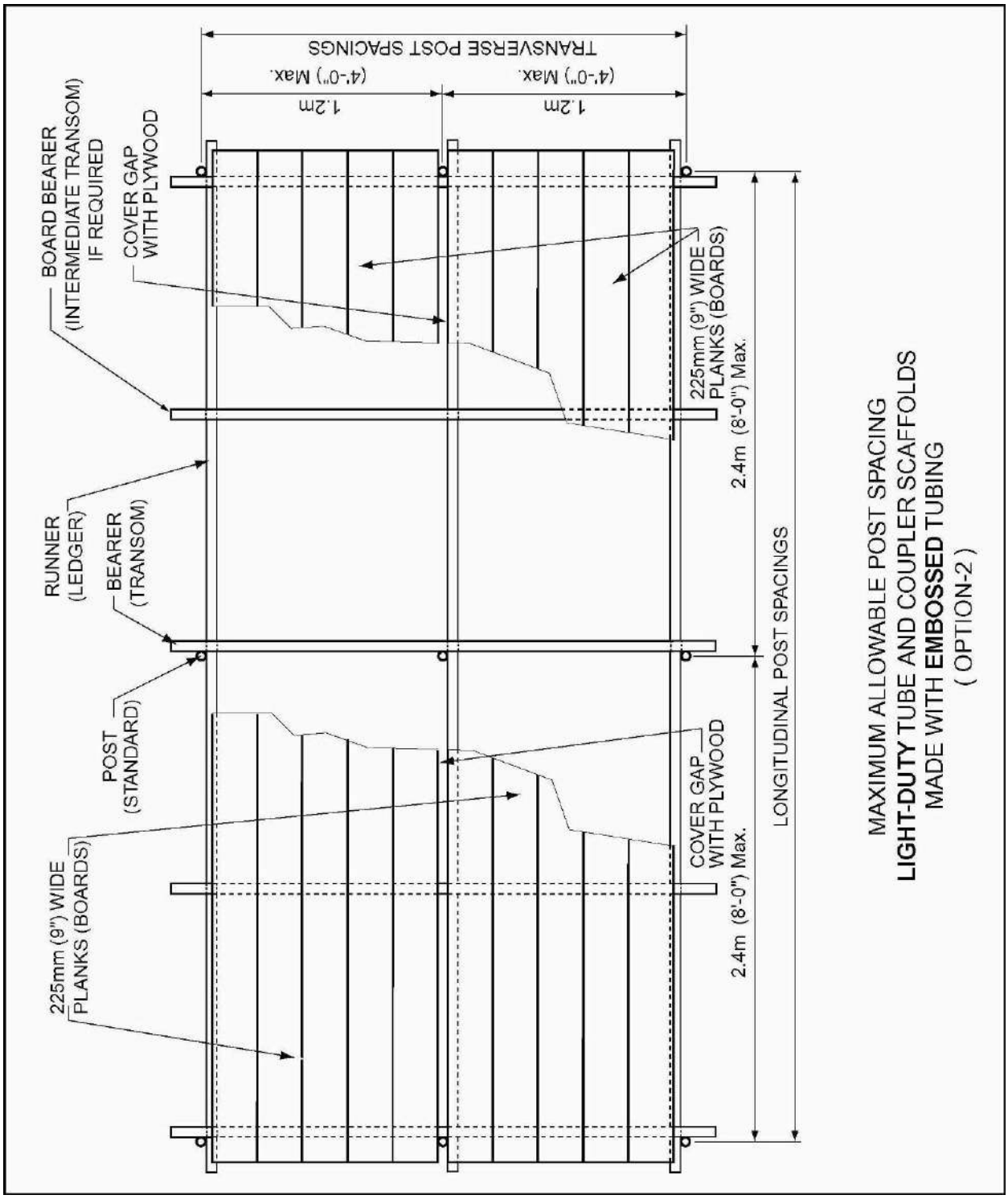

Figure 2.58

Saudi Aramco: Company General Use

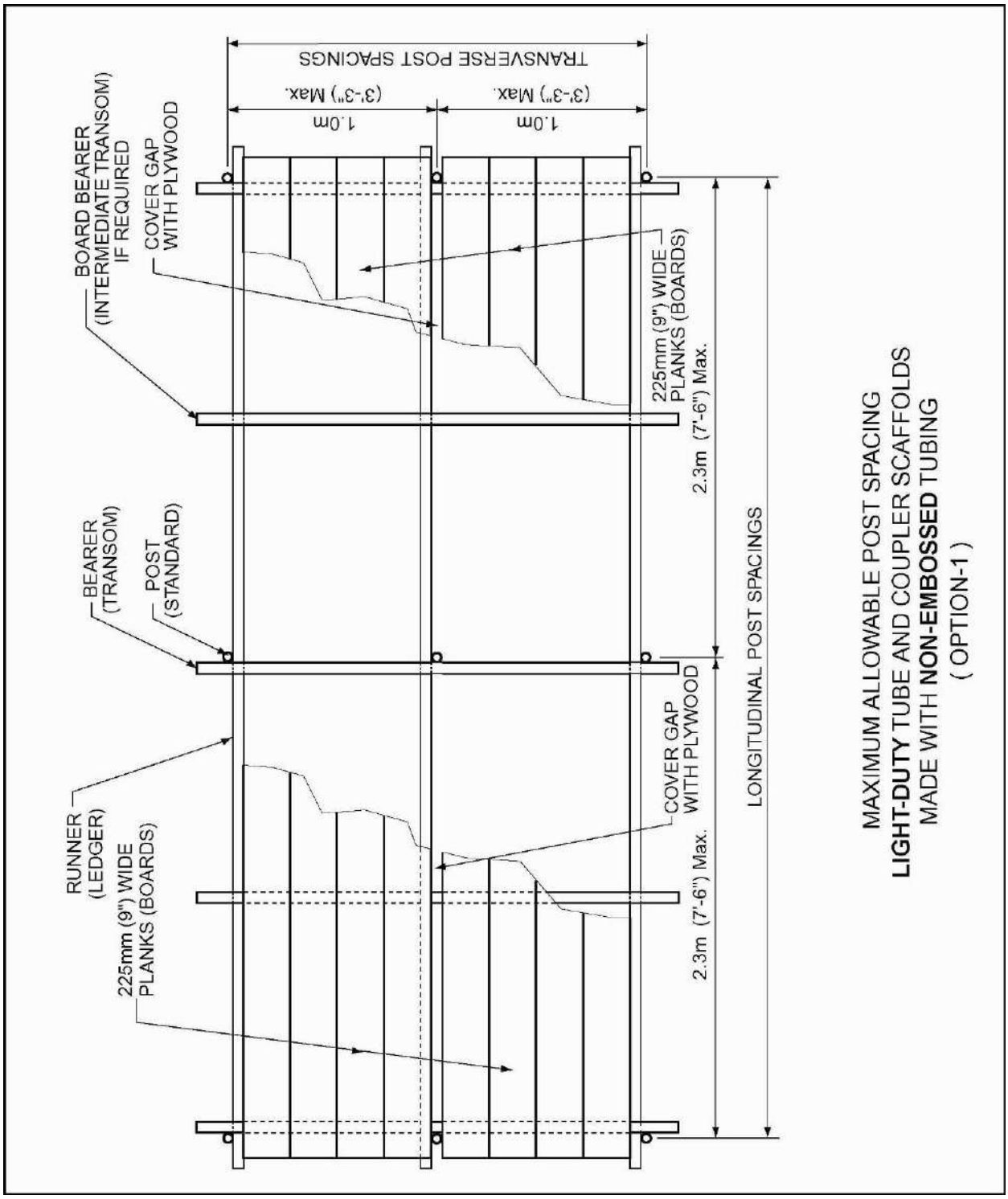

Figure 2.59

Saudi Aramco: Company General Use

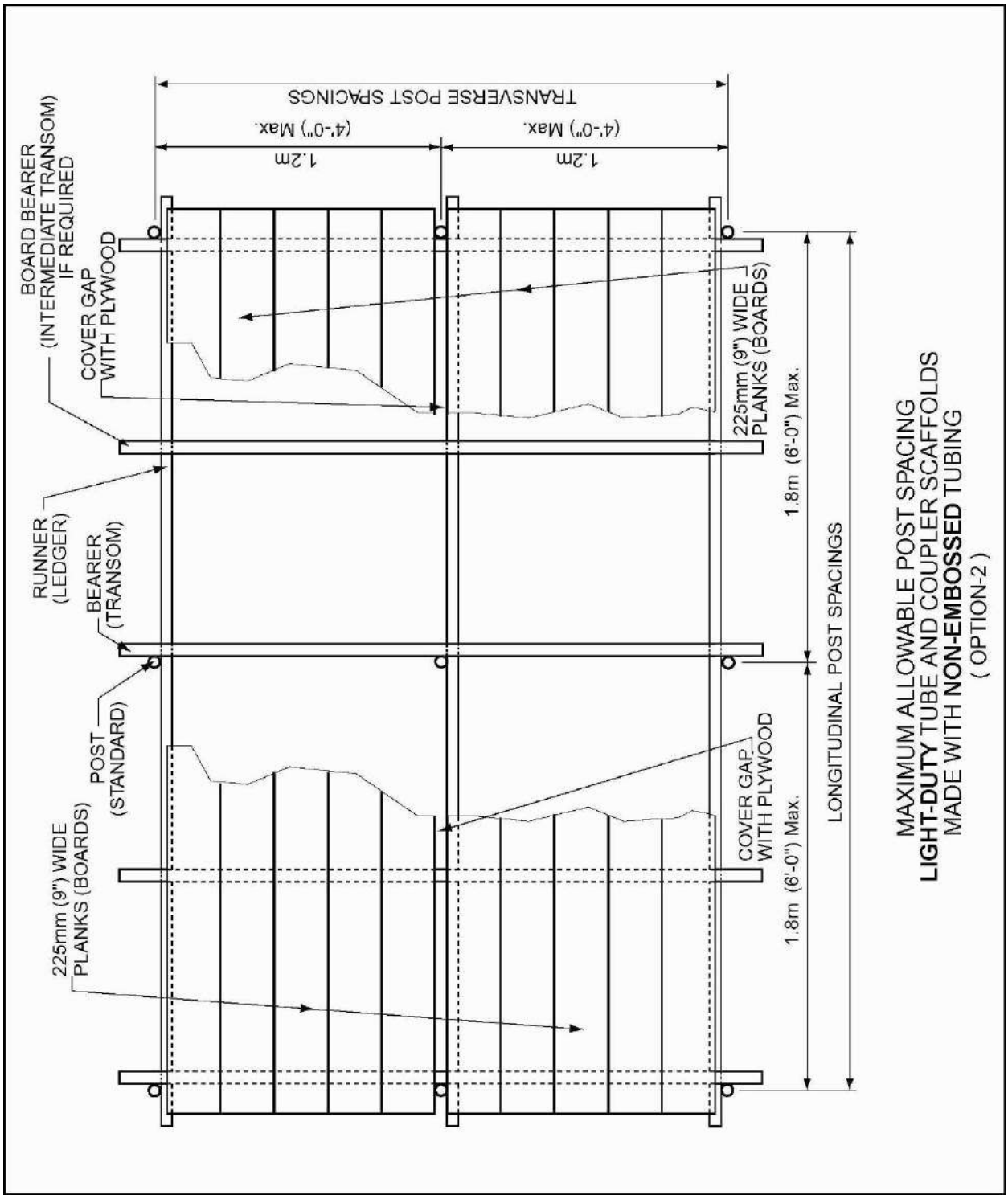

Figure 2.60

Saudi Aramco: Company General Use

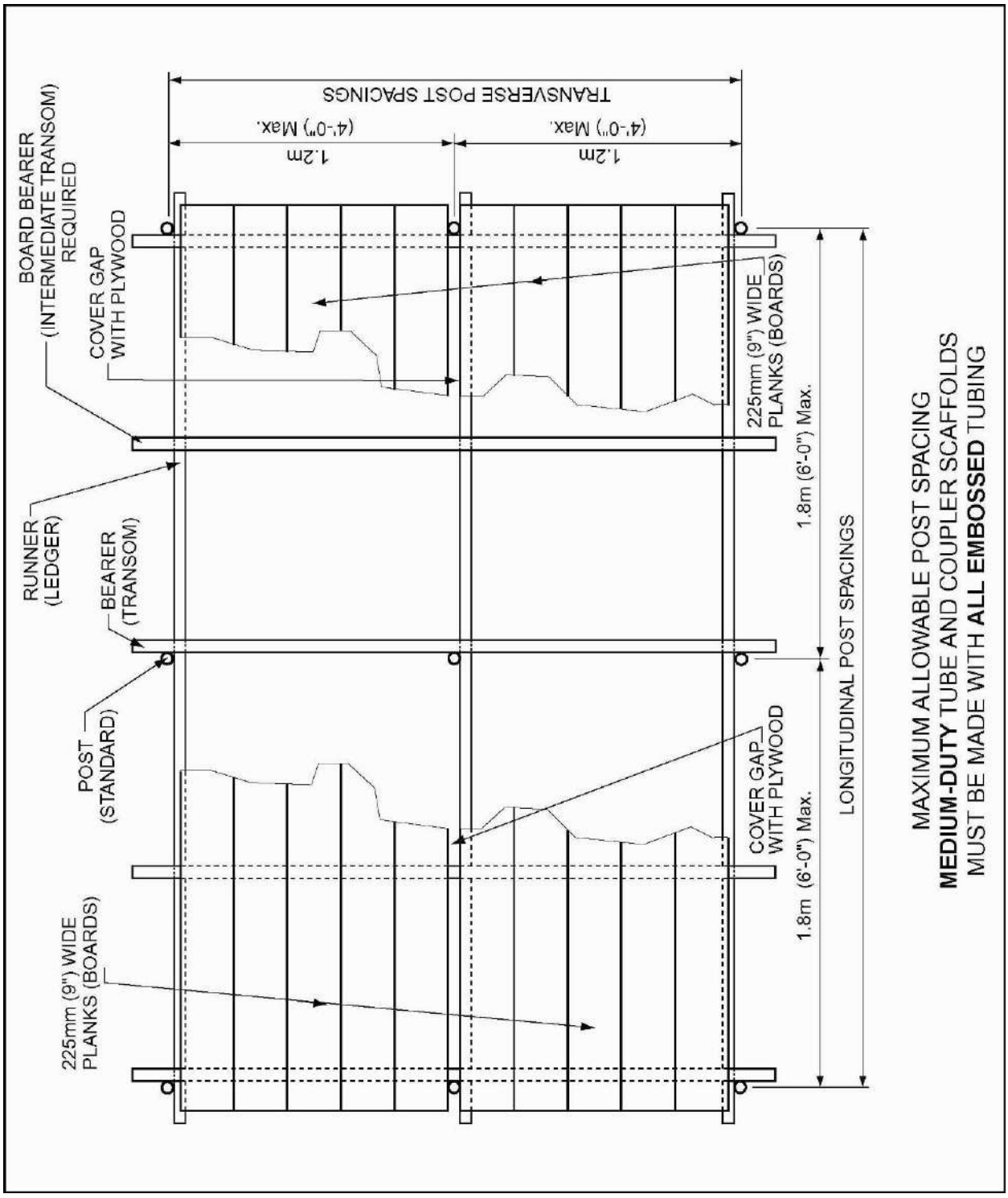

Figure 2.61

Saudi Aramco: Company General Use

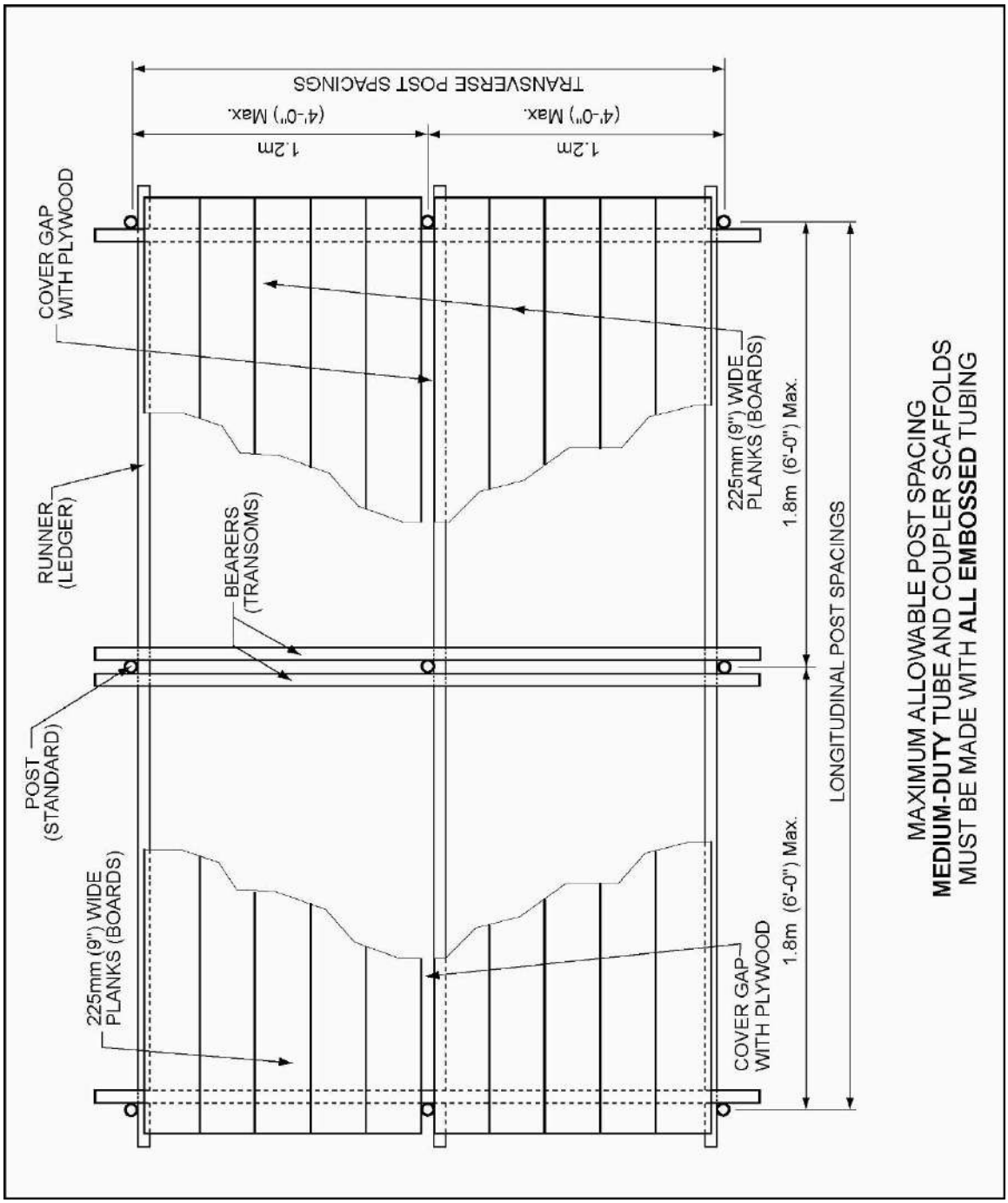

Figure 2.62

Saudi Aramco: Company General Use

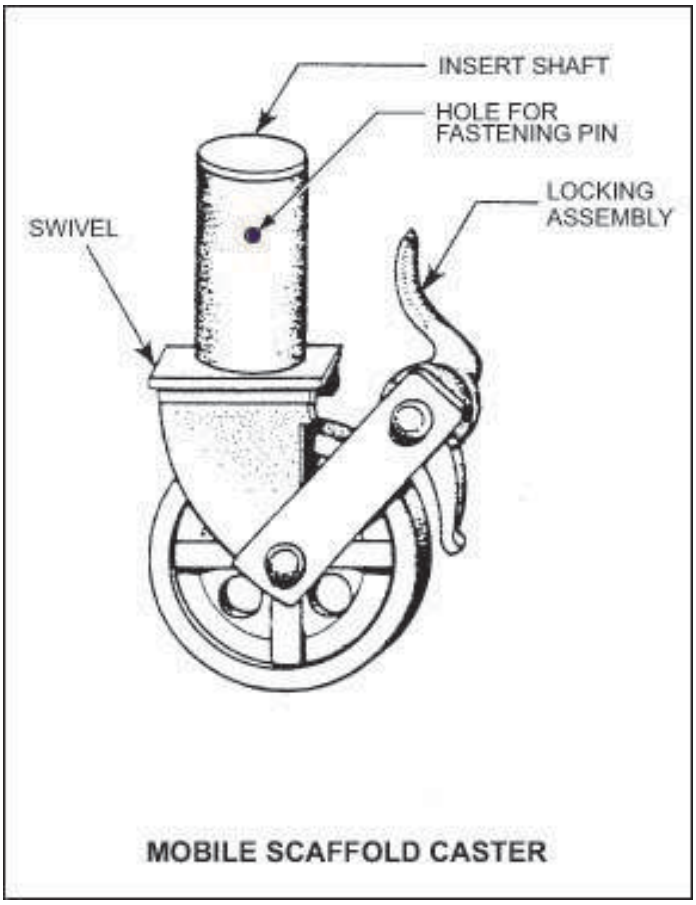

Figure 2.63

Saudi Aramco: Company General Use

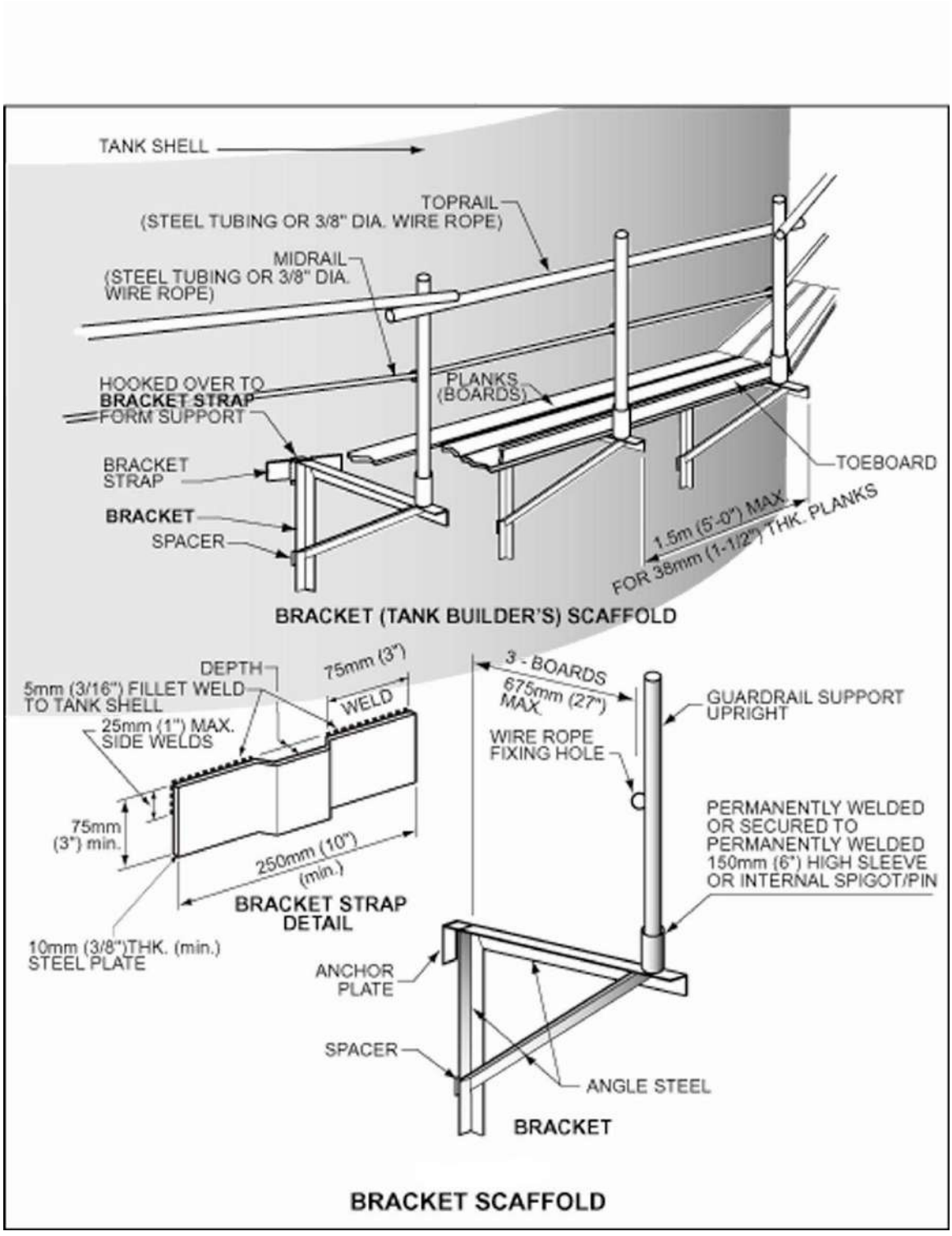

Figure 2.64

Saudi Aramco: Company General Use

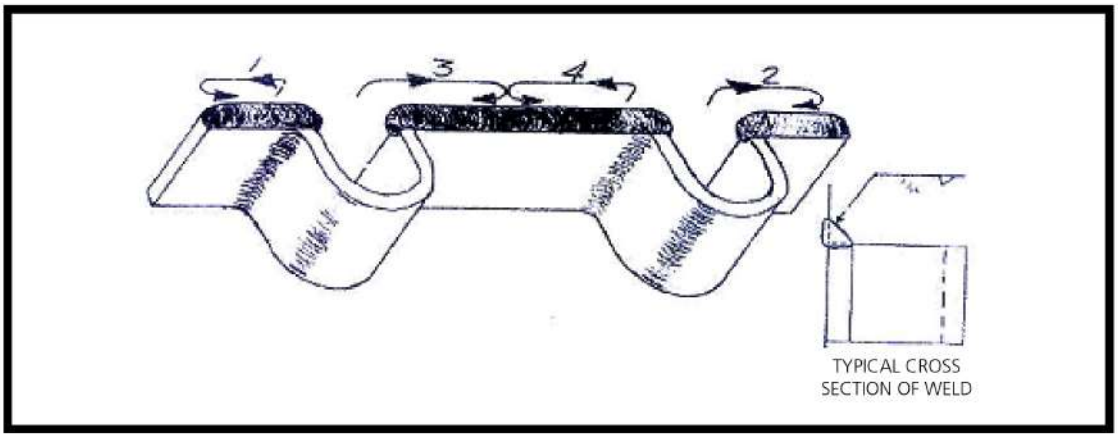

Figure 2.65

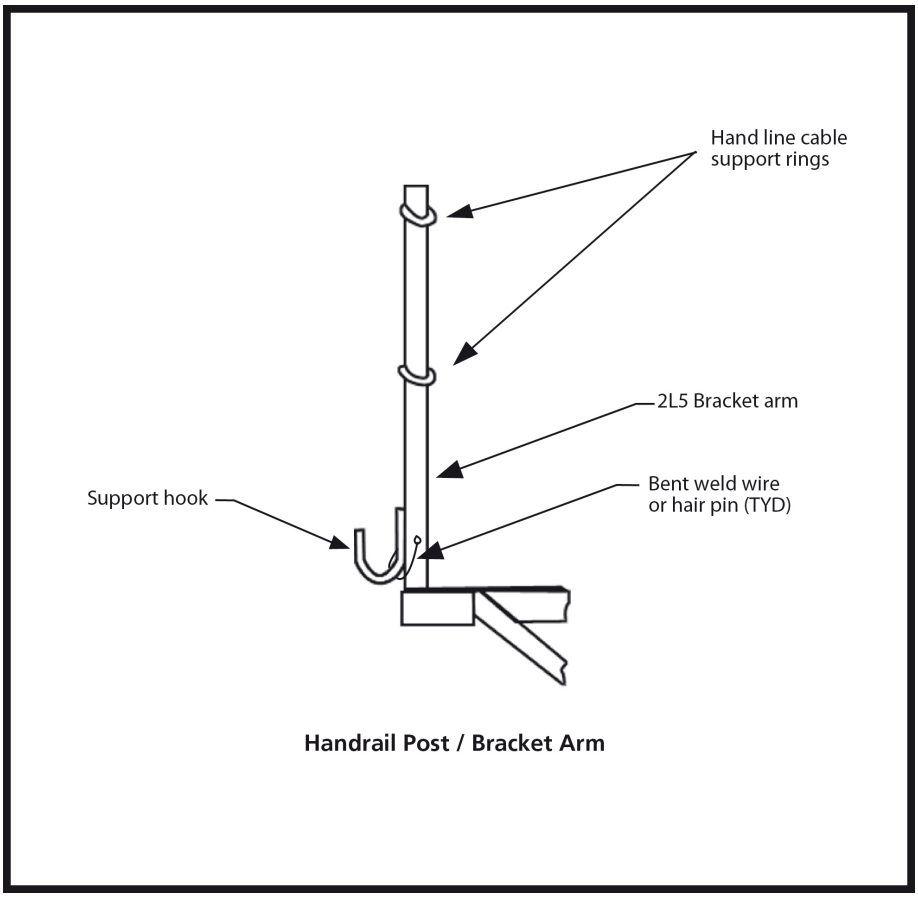

Figure 2.66

Saudi Aramco: Company General Use

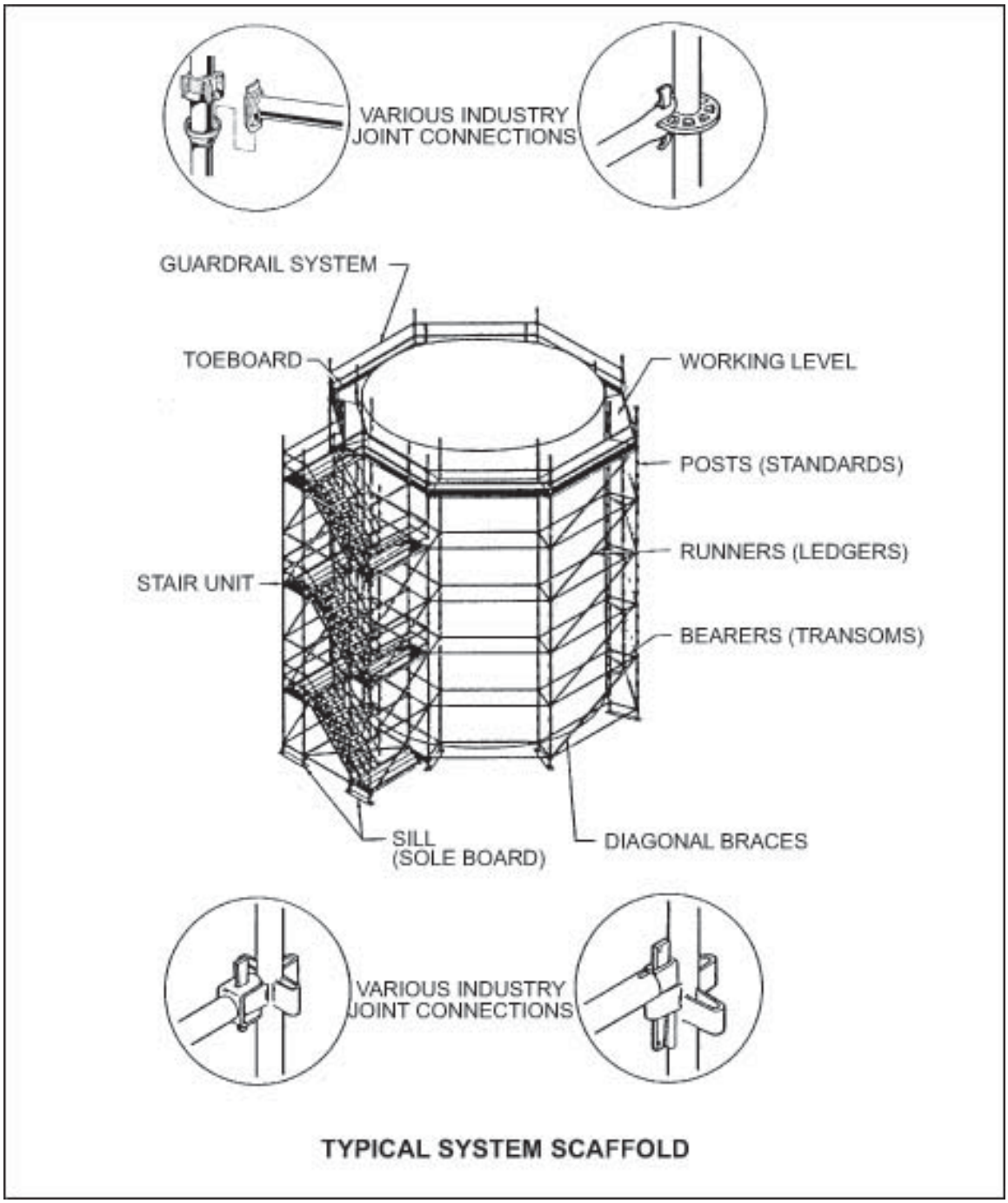

Figure 2.67

Saudi Aramco: Company General Use

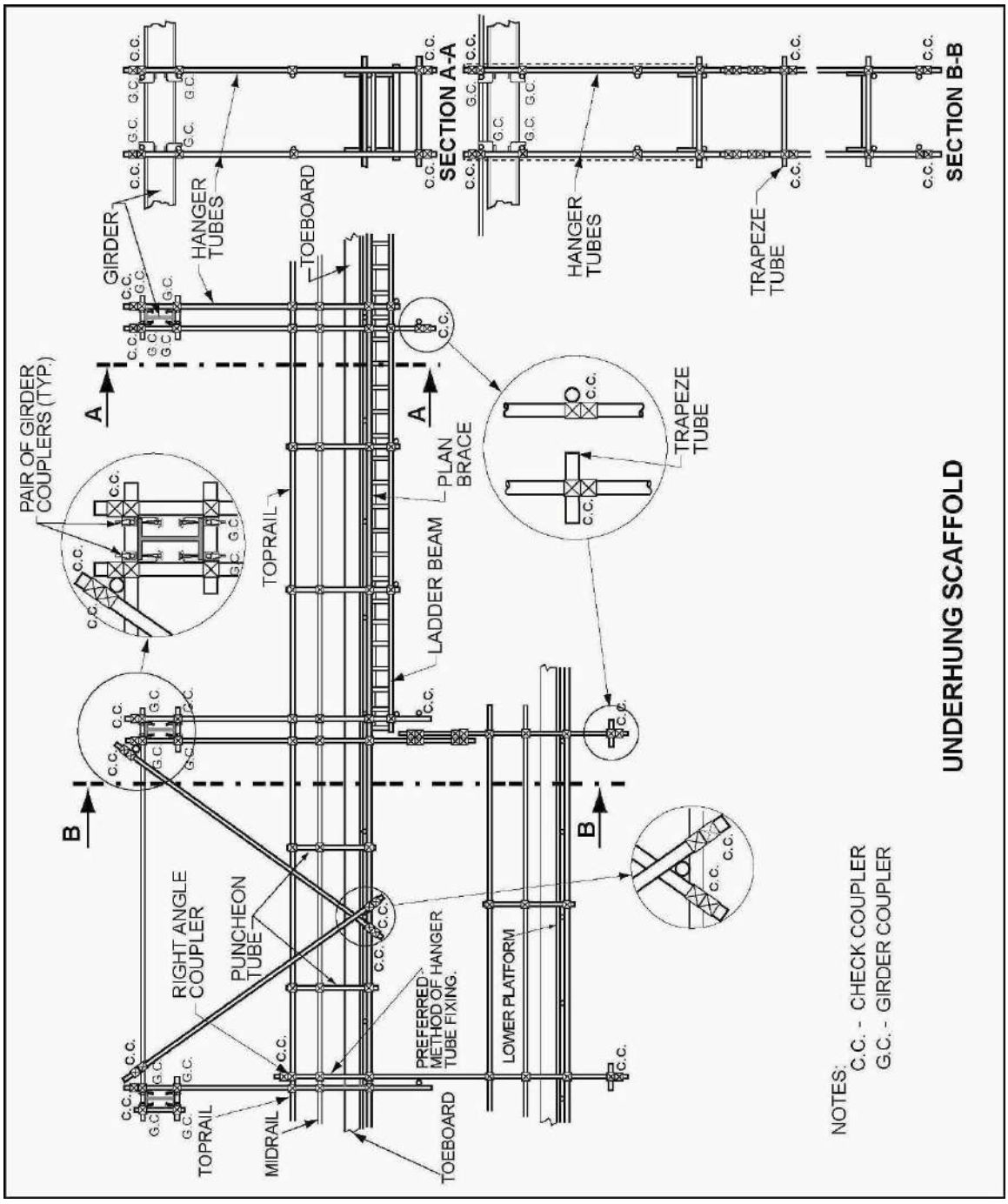

Figure 2.68

Saudi Aramco: Company General Use

3. Ladders and Stepladders

3.1 Purpose

This chapter describes minimum safety requirements for construction and use of portable ladders, including stepladders and job-made ladders.

3.2 References

American National Standards Institute (ANSI)/American Ladder Institute (ALI):

ANSI/ALI A14.1, *Ladders – Portable Wood – Safety Requirements*

ANSI/ALI A14.2, *Ladders – Portable Metal – Safety Requirements*

ANSI/ALI A14.3, *Ladders – Fixed – Safety Requirements*

ANSI/ALI A14.4, *Requirements for Job Made Wooden Ladders*

ANSI/ALI A14.5, *Ladders – Portable Reinforced Plastic – Safety Requirements*

European Committee for Standardization, European Standard (EN):

EN 131, *Ladders*

National Safety Council (NSC) Data Sheet:

Data Sheet 568, *Job-Made Ladders*

U.S. Code of Federal Regulations (CFR):

29 CFR 1926, Subpart X, *Stairways and Ladders*

3.3 General Requirements

3.3.1 Portable ladders and stepladders shall meet applicable ANSI or European (EN) standards, including proper labeling and marking. It shall be understood that "American Standard" is not a proper label and may indicate a substandard ladder. See Figure 3.1.

3.3.2 Self-supporting portable ladders shall be rated to support at least four times the maximum intended load.



Figure 3.1 Unapproved "American Standard" Label

3.3.3 Portable ladders and stepladders shall be maintained in good condition at all times. Joints shall be tight. Rungs, hardware and fittings shall be securely attached. Movable parts shall operate freely without binding or excessive looseness.

3.3.4 Portable ladders and stepladders shall be inspected before each use. Damaged or weakened ladders shall be immediately removed from Saudi Aramco (SA) property or project sites. Examples of unacceptable damage include:

- Split or broken side rails.
- Missing or damaged rungs.
- Bent or missing hinges.
- Any other damage that hinders safe use of the ladder.

3.3.5 Wood and aluminum portable ladders and stepladders shall not be painted.

3.3.6 Side rails shall have smooth surfaces (without slivers) with no projections.

3.3.7 Ladder rungs (or steps) shall be parallel, level and be uniformly spaced. Rungs shall be between 25 cm (10 inches) and 36 cm (14 inches) on center. A rung spacing of 30 cm (12 inches) is preferable.

3.3.8 Minimum clear distance between straight ladder side rails, or side rails in any section of an extension ladder, shall be 29 cm (11-1/2 inches).

3.3.9 Rungs of portable metal ladders shall be corrugated, knurled, dimpled, coated with skid-resistant material or otherwise treated to minimize the possibility of slipping. Ladders shall be maintained free of oil, grease or other potential slipping hazards.

3.4 Ladder Positioning

3.4.1 Straight ladders and extension ladders shall be placed at a slope of 4:1 (i.e., for every 4 m [12 ft] of vertical rise, the base is set 1 m [3 ft] out).

3.4.2 Straight ladders and extension ladders shall be placed vertically only if both side rails are rigidly attached to a supporting structure (e.g., scaffold) at the top, middle and bottom of the ladder.

3.4.3 Ladders shall extend at least 1 m (3 ft) above the landing surface to which the ladder is used to gain access (e.g., platform, eave or roof).

3.4.4 Bases of ladders shall be equally supported on a firm level surface. Boxes, blocks, barrels, etc., and temporary work platforms (e.g., scaffolds) shall not be used as a means of support.

3.4.5 Ladders shall not be used on slippery surfaces unless secured or provided with slip-resistant feet. Slip-resistant feet shall not be used as a substitute for care in positioning, securing or holding a ladder that is used on slippery surfaces when unavoidable.

3.4.6 Bottom rungs of ladders shall not be more than 30 cm (1 ft) above the lower level used to mount the ladder. The area at the base of a ladder shall be kept clear.

3.4.7 Ladders shall not be used in a horizontal position as platforms, walkways or scaffolds.

3.4.8 Ladders shall not be supported on their rungs. Rungs shall not be used to support scaffold planks.

3.4.9 Ladder side rails shall be evenly supported at the upper resting place. The ladder shall be securely tied off at the uppermost support point to prevent movement. When secure fixing at the top of the ladder is impractical, other measures shall be taken to prevent movement of the ladder (e.g., securing the base of the ladder, using side guys, stationing personnel at the base).

3.4.10 Flagmen shall be stationed around the ladder base or substantial barricades with flashers erected when a ladder could be struck by moving vehicles or equipment.

3.4.11 When a ladder is positioned in front of or near a doorway, the door shall either be locked shut or secured in the open position, with a man stationed there to prevent personnel from using the door.

3.5 Ladder Clearances

3.5.1 Safe clearances shall be maintained to prevent personnel from bumping into or snagging onto projecting objects while ascending or descending a ladder.

3.5.2 Ladders shall have a minimum clear perpendicular distance of 76 cm (30 inches) from the rungs to the nearest projecting object on the climbing side. When unavoidable obstructions are encountered, the minimum clearance distance may be reduced to 61 cm (24 inches) if deflector plates are provided.

3.5.3 The perpendicular distance between ladder rungs/steps and any obstruction behind the ladder shall not be less than 18 cm (7 inches).

3.5.4 The minimum clearance to the nearest fixed object on each side of the ladder shall be 38 cm (15 inches) from the center line of the ladder.

3.5.5 The minimum clear distance between the side rails of adjacent ladders or stepladders shall be 41 cm (16 inches).

3.6 Ladder Usage

3.6.1 Metal ladders or ladders with metal reinforced or conductive side rails shall not be used near electrical equipment. Wooden or fiberglass ladders shall be used for work near electrical equipment. Portable metal ladders shall have a warning notice attached stating that the ladder shall not be used near electrical equipment.

3.6.2 Aluminum ladders shall not be used where there is a likelihood of contact with materials that chemically react with aluminum, such as caustic liquids, damp lime, wet cement, acids, etc.

3.6.3 Ladder sections shall not be spliced, lashed, tied or fastened together to provide longer sections.

3.6.4 Personnel shall ensure that their shoes and the ladder are free from grease, oil, mud, etc., before climbing a ladder.

3.6.5 Only one person shall be on a portable ladder or stepladder at a time.

3.6.6 Personnel shall face the ladder and maintain three points of contact with the ladder at all times. This requires two feet and one hand, or two hands and one foot, to be in contact with the ladder rungs and/or side rails when climbing or descending a ladder.

3.6.7 Hands shall be free of materials while climbing or descending a ladder. Personnel shall not carry tools and materials in their hands when climbing a ladder. Tools may be carried in secure pockets or on special tool belts. Materials or tools shall be raised and lowered by rope.

3.6.8 If work is performed while standing on a ladder and the individual is more than 1.8 m (6 ft) above the ground/lower surface, a properly anchored personal fall arrest system (PFAS) shall be used, or if use of a PFAS is impractical one hand shall always be firmly grasping the ladder. See Chapter II-5, *Fall Protection*, of this manual.

3.6.9 If the work is more than 1.8 m (6 ft) above the ground/lower surface and is long term in nature or requires heavy physical exertion, other methods such as a scaffold or personnel lift shall be used instead of a ladder.

3.6.10 The user of a ladder shall not overextend their body (i.e., belt buckle [torso]) past the ladder side rails.

3.6.11 Ladders shall not be moved, shifted or extended while personnel are on the ladder.

3.6.12 Ladder use shall be restricted to the purpose for which the ladder is designed.

3.6.13 Ladders shall not be loaded beyond the maximum intended load for which they were built, nor beyond the manufacturer's rated capacity.

3.7 Stepladders

3.7.1 Stepladders shall have folding cross-braces (spreaders) that are hinged. Both sections shall be fully opened with hinged braces flat and taut before use to ensure stability.

3.7.2 Stepladders shall be positioned with the steps pointing towards the work location.

3.7.3 Personnel shall not stand on a stepladder's top platform, top step, pail shelf or braces.

3.7.4 The rear section of stepladders (e.g., cross-bracing on the back section) shall not be used for climbing or standing unless the stepladder is designed and provided with proper steps for climbing on both front and rear sections.

3.7.5 A stepladder shall not be left unattended with tools or materials stored on it.

3.7.6 A stepladder shall not be used to gain access to a roof or other elevated surface.

3.7.7 Stepladders shall only be used when equally supported by all four legs.

3.7.8 Stepladders shall not be used in the partially closed/open position or as an upright or straight ladder (e.g., leaned against a wall or other support).

3.7.9 "Flip-up" types of stepladders (e.g., that could also be used as a straight ladder) shall not be used and are prohibited. See Figure 3.2.



Figure 3.2 Prohibited "Flip Up" Type of Stepladder

3.7.10 Stepladders shall not exceed 6 m (20 ft) in length.

3.8 Extension Ladders

3.8.1 When an extension ladder is fully extended, the minimum overlap between ladder sections depends on the extension ladder length:

- Up to and including 11 m (36 ft) = 1.2 m (4 ft) overlap.
- Over 11 m (36 ft), up to and including 14.6 m (48 ft) = 1.5 m (5 ft) overlap.

3.8.2 Extension ladders shall be securely tied off to a rigid structure or securely held in position by a coworker.

3.9 Job-Made Ladders

3.9.1 Job-made ladders shall not be used on scaffolds.

3.9.2 Job-made ladders shall not exceed 4.5 m (15 ft) in length.

3.9.3 Structurally sound (e.g., graded) nominal 2x4 lumber (or larger) shall be used for side rails of single-rung ladders.

3.9.4 Job-made ladders that are the only means of entry and exit from a working area for 25 or more workers, or if simultaneous two-way traffic is expected, shall be a double-rung ladder.

3.9.5 Nominal 2x4 lumber (or larger) shall be used for side and middle rails of double-rung ladders up to 3.6 m (12 ft) in length. Nominal 2x6 lumber (or larger) shall be used for double-rung ladders from 3.6 to 4.5 m (12 to 15 ft) in length.

3.9.6 Wood rungs shall have the minimum dimensions shown in Table 3.1 and shall be made of wood that meets ANSI A14.4 requirements for job-made ladders.

Table 3.1 Job Made Wooden Ladder Requirements

Length Of Rung	Min. Rung Thickness	Min. Rung Width
Up to & including 50 cm (20 inches)	2 cm (0.78 inch)	8 cm (3 inches)
Over 50 cm (20 inches) and up to and including 76 cm (30 inches)	2 cm (0.78 inch)	9.5 cm (3.75 inches)

3.9.7 Rungs shall be inset into the edges of the side rails 13 mm (1/2 inch) or filler blocks shall be used on the rails between the rungs. Rungs shall be secured to each rail with three 10d common nails or other fasteners of equivalent strength.

3.9.8 Rungs for job-made ladders shall be parallel, level and be uniformly spaced. Rungs shall be between 25 cm (10 inches) and 36 cm (14 inches) on center. A rung spacing of 30 cm (12 inches) is preferable.

4. Temporary Walking and Working Surfaces

4.1 Purpose

This chapter describes minimum safety requirements for temporary walking and working surfaces, whether at ground or elevated levels.

4.2 References

Saudi Aramco (SA) General Instructions (GIs):

GI 6.020, *Personal Flotation Devices (PFDs) for Work On, Over or Near Water*

GI 8.001, *Safety Requirements for Scaffolds*

SA Engineering Standard (SAES):

SAES-P-123, *Lighting*

American National Standards Institute (ANSI)/American Society of Safety Engineers (ASSE):

ANSI/ASSE A10.18, *Safety Requirements for Temporary Floors, Holes, Wall Openings, Stairways and Other Unprotected Edges in Construction and Demolition Operations*

4.3 General Requirements

4.3.1 Work locations shall be provided with safe means of entry and exit. Ladders used to access elevated work locations shall be per Chapter II-3, *Ladders and Stepladders*, of this manual. Entry and exit points at elevated work locations shall be per Chapter II-2, *Scaffolding.*

4.3.2 Elevated work platforms shall be per Chapter II-2, *Scaffolding*, and Chapter II-5, *Fall Protection*. Holes and openings in elevated walking and working surfaces shall be guarded by a complete guardrail system or securely covered.

4.3.3 Good housekeeping shall be maintained to help prevent slips, trips and falls. Oil spills, mud, scrap and other debris shall be cleaned up immediately.

4.3.4 Walking surfaces shall not be obstructed.

4.3.5 Walking or working shall not be permitted on steel or other surfaces on which paint or cement is still wet.

4.3.6 When work cannot be performed safely on the ground, from part of a building or from a permanent structure, then a scaffold, ladder or other

acceptable means of temporary access shall be provided and properly maintained.

4.3.7 Each person who could fall more than 1.8 m (6 ft) shall be protected from falling by a fall protection system.

4.3.8 Fall protection systems include fixed fall protection systems (e.g., temporary or permanent platforms with a complete guardrail system consisting of toprails, midrails and toeboards provided at all open edges) and personal fall arrest systems. Fixed fall protection systems shall be considered the most favorable. See Chapter II-2, *Scaffolding*.

4.3.9 Where a fixed fall protection system cannot be installed, a personal fall arrest system, which is designed to stop (arrest) personnel once a fall has occurred, shall be used. See Section II-5, *Fall Protection*.

4.3.10 Electrical cords, welding cables, hoses, etc., shall not create trip hazards on walking and working surfaces. Whenever possible, cords, cables and hoses shall be supported at least 2.4 meters (8 ft) above walkways and platforms by nonconductive material(s).

4.4 Lighting

4.4.1 Work areas shall be provided with adequate and properly maintained lighting.

4.4.2 Lighting fixtures shall be listed and labeled by Underwriters' Laboratories (UL) or another approved agency per SAES-P-123. See Chapter I-11, *Hand Tools and Power Tools*.

4.5 Protection from Falling Objects

4.5.1 Protective screens shall be securely installed at least between the toeboard, midrail and toprail where there is danger of personnel being struck by falling objects from elevated work areas (e.g., tools, materials or equipment stacked higher than the top edge of the toeboard).

4.5.2 Protective screens shall consist of a minimum No. 18 gauge wire, 1.2 cm (1/2 inch) mesh or equivalent. See Section II-2, *Scaffolding*, for additional falling object protection requirements.

4.6 Hot Surfaces

4.6.1 Hot surfaces shall be protected by insulation or other suitable means to prevent personnel from being burned or making contact with the hot surface.

4.6.2 Barricades shall be erected and warning signs posted in work areas where there are hot surfaces. The signs shall state at a minimum: "Warning-Hot Surfaces."

4.7 Temporary Ramps

4.7.1 Ramps and walkways 1.8 m (6 ft) or more above lower levels shall have complete guardrail systems. See Chapter II-2, *Scaffolding*.

4.7.2 Temporary ramps or walkways shall not be inclined more than a slope of one vertical unit to three horizontal units (20 degrees above the horizontal). Slopes not exceeding 15 degrees are preferred.

4.7.3 Temporary ramp or walkway slopes inclined more than one vertical to eight horizontal units (7 degrees above the horizontal) shall have cleats spaced not more than 35 cm (14 inches) apart. All cleats shall be securely fastened to the ramp or walkway planks.

4.8 Temporary Stairways

4.8.1 Temporary stairways shall:

A. Be at least 56 cm (22 inches) wide.

B. Have landings not more than 3.7 m (12 ft) of vertical rise. Landings shall be at least 76 cm (30 inches) long, in the direction of travel, and at least 56 cm (22 inches) wide.

C. Include a guardrail system installed on open sides and edges of landings where personnel could fall 1.8 m (6 ft) or more (see Chapter II-2, *Scaffolding*, for more information).

D. Be installed between 30 degrees and 50 degrees above the horizontal, with stair slopes between 30 degrees and 35 degrees preferred.

E. Have treads made of wood or other solid material and be installed the full width of the stair.

F. Have uniform riser heights and tread depths, including any foundation structure used as one or more treads. Variations in riser height and tread depth shall not exceed 6 mm (1/4 inch).

G. Have riser heights of at least 15 cm (6 inches) and not more than 20.5 cm (8 inches).

H. Have tread depths of at least 22 cm (9 inches) and not more than 28 cm (11 inches).

I. Have sloping handrails with a circumference that provides an adequate handhold for personnel.

J. Have sloping handrails at a height of at least 86 cm (34 inches) and not more than 94 cm (37 inches) from the upper handrail surface to the juncture of the riser face and the forward edge of the tread.

K. Have sloping midrails located at a height midway between the handrail and the stair tread.

L. Have a minimum clearance of 8 cm (3 inches) between the handrail and adjacent wall or other objects.

M. Be free of hazardous projections, such as protruding nails or protruding handrails, and slippery surfaces.

N. Not be spiral stairways.

4.8.2 Stairways with four or more risers, or that rise more than 76 cm (30 inches) in height, shall have a sloping handrail and midrail system on all open sides. Enclosed stairways shall have a sloping handrail on the right side descending.

4.8.3 Guardrails at landings and sloping handrails shall be capable of withstanding without failure a minimum force of 90 kg (200 lb) applied in any downward or horizontal direction at any point along the toprail or handrail.

4.8.4 Doors or gates shall not open directly on a stairway (i.e., a landing shall be provided). The swing of the door shall not reduce the effective width of the platform to less than 50 cm (20 inches).

4.9 Roof Work

4.9.1 Temporary (rigid or wire rope) guardrails or use of personal fall arrest systems shall be used for work within 1.8 m (6 ft) from the edge of a roof (flat or sloped), near roof openings (e.g., skylights) or for work at roof locations with slopes of 1:4 (vertical:horizontal) or greater. See Chapter II-5, *Fall Protection*.

4.9.2 Roofs shall be inspected by a degreed structural engineer and reinforced as necessary to support the load of personnel, equipment and materials.

4.9.3 Personnel shall not work on roofs or other elevated surfaces when exposed to storms, high winds (sustained winds more than 65 kph [40 mph]) or lightning.

4.9.4 Equipment and materials shall not be stored within 1.8 m (6 ft) from the edge of the roof, unless a complete guardrail system, including toeboards, is erected along the edge.

4.10 Work Near Unstable Structures

4.10.1 If work being performed is likely to reduce the stability of an existing structure or building, bracing, guys, stays, jacks or other means of support shall be used. See Chapter II-14, *Demolition*.

4.10.2 No wall section which is higher than one story shall be permitted to stand alone without lateral bracing, unless such wall was originally designed to do so and is in safe condition.

4.10.3 Unstable structures shall not be left unsupported overnight.

4.10.4 All walls shall be left in a stable condition at the end of each shift by bracing, support jacks, guy wires, etc. Wind force and storm conditions shall be taken into consideration when providing necessary supports.

4.11 Work On, Over or Near Water

4.11.1 When personnel work on, over or near water, a complete guardrail system shall be provided. Wherever a guardrail system is impractical, or when personnel are outside the protection of these safeguards, a personal fall arrest system (PFAS) shall be worn. See Chapter II-5, *Fall Protection*.

4.11.2 Personnel working on, over or near water shall wear approved personal flotation devices (PFDs), as per GI 6.020. See Chapter IV-2, *Marine Operations*.

4.11.3 When conditions require use of both PFAS and PFDs, an assessment shall be conducted to determine the most practical means of protection (e.g., PFDs may be sufficient when working at a relatively low height over deep water, PFDs may not be required when working high above the water when a PFAS will prevent falling into the water, or both PFAS and PFDs need to be worn).

4.11.4 Personnel shall never be alone when working on, over or near water.

5. Fall Protection

5.1 Purpose

This chapter describes minimum fall protection requirements for Saudi Aramco (SA) and contractor personnel working at SA facilities and project sites.

5.2 References

SA General Instructions (GIs):

GI 7.027, *Crane Suspended Personnel Platform (Manbasket) Operations*

American National Standards Institute (ANSI)/American Society of Safety Engineers (ASSE):

ANSI/ASSE A10.11, *Safety Requirements for Safety Nets*

ANSI/ASSE A10.32, *Fall Protection Systems for Construction and Demolitions*

ANSI/ASSE Z359, *Fall Protection Code* (Version 2 or later)

U.S. Code of Federal Regulations (CFR):

29 CFR 1910.66, *Powered Platforms for Building Maintenance*

29 CFR 1926.502, *Fall Protection Systems Criteria and Practices*

5.3 General Requirements

5.3.1 Where possible, work shall be performed on the ground to minimize exposure to falls from heights.

5.3.2 Each person who could fall more than 1.8 m (6 ft) shall be protected from falling by a fall protection system.

5.3.3 Fall protection systems include fixed fall protection systems (i.e., temporary or permanent platforms with a complete guardrail system consisting of toprails, midrails and toeboards provided at all open edges) and personal fall arrest systems. Fixed fall protection systems shall be considered the most favorable. See Chapter II-2, *Scaffolding*, of this manual.

5.3.4 Where a fixed fall protection system cannot be installed, a personal fall arrest system, which is designed to stop (arrest) personnel once a fall has occurred, shall be used.

5.3.5 Personal fall arrest systems shall include a full-body harness (see Figure 5.1), shock-absorbing lanyard (see Figure 5.2) or self-retracting lifeline

(see Figure 5.3) and a substantial anchor point and/or horizontal/vertical lifeline.

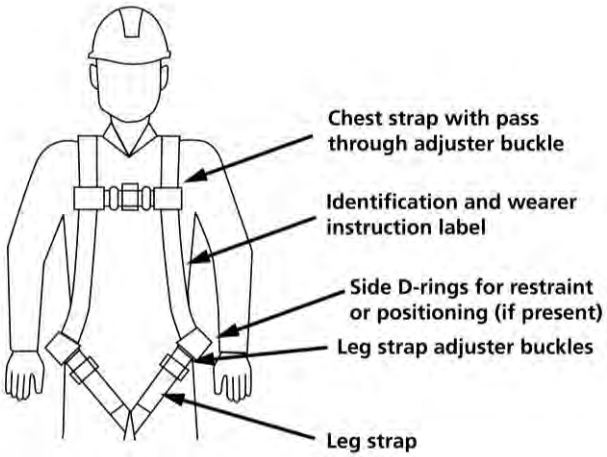

Full-Body Harness (front)

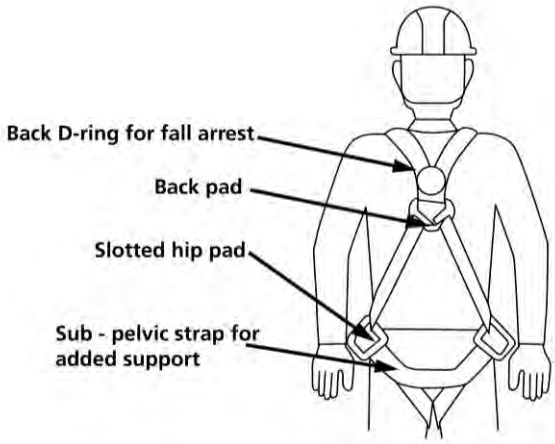

Full-Body Harness (back)

Figure 5.1 Full-Body Harness

5.3.6 Shock-absorbing lanyards shall be either a "Y" lanyard (i.e., two lanyards sharing a common deceleration device) or double-leg lanyard (i.e., two lanyards each with their own individual deceleration device, see Figure 5.2) in order to protect the user during hooking/unhooking transitions.



Figure 5.2 Shock-Absorbing Double-Leg Lanyard



Figure 5.3 Self-Retracting Life line

5.3.7 SA proponent organizations (SAPOs) and contractor companies performing work at heights shall develop a fall protection plan for the specific work at heights to be performed by their personnel. It shall include, but not be limited to, the following:

Fall hazards of the job.

- Specific tasks personnel may perform that require use of a personal fall arrest system.
- Method(s) of access to elevated work areas (e.g., ladder, scaffold).
- Fall protection systems and equipment to be used.

- Identification and fitting of correct fall protection equipment to the task.
- Selection of appropriate anchor points (i.e., anchorage).
- Methods for securing lanyards and lifelines.
- Protection from falling objects.
- Storage, inspection and maintenance of fall protection equipment.
- High elevation rescue procedures.

5.3.8 Supervisors of personnel exposed to fall hazards shall:

A. Be aware of fall hazards in the work area.

B. Ensure that fall protection equipment is available and in good working condition before commencing work.

C. Periodically monitor work activities to ensure personnel are properly using fall protection equipment.

D. Ensure personnel wearing personal fall arrest systems are continuously monitored so that a fall may be immediately identified and responded to.

E. Ensure fall protection equipment is properly stored in a clean, dry environment away from direct sunlight.

F. Ensure fall protection equipment is inspected by a competent person at least monthly and is properly cleaned and maintained.

5.3.9 Fall protection equipment shall not be used for any purpose other than its intended use.

5.3.10 The fall protection equipment selected shall be appropriate for the particular work situation.

5.3.11 The presence of acids, dirt, moisture, oil, grease or activities such as welding, chemical cleaning and abrasive blasting shall be considered when selecting the appropriate fall protection equipment.

5.3.12 Only equipment designed for fall arrest (see Section 5.5) shall be used when required to stop a possible free fall.

5.3.13 Equipment designed solely for use as a fall restraint or positioning system (i.e., designed to prevent a free fall by limiting a person's travel) shall not be used in SA facilities and project sites (e.g., equipment labeled "ANSI Z359.3" or "EN 358" shall not be used). Fall arrest equipment shall be used when fall restraint or positioning is needed (except as noted in Section 5.4.2).

5.3.14 Personnel in motorized aerial lifts (e.g., scissor lifts, aerial work platforms, JLG lifts) shall continuously wear a full-body harness with the lanyard securely attached to an appropriate anchorage point (not the handrail of the aerial lift).

5.3.15 Personnel shall inspect fall protection equipment, including full-body harnesses, lanyards and D-rings prior to each use.

5.3.16 Fall protection equipment shall be kept clean, in good repair and stored properly when not in use.

5.3.17 Rescue capabilities shall be immediately available for personnel involved in a fall. Suspension trauma safety straps (foot stirrups) shall be provided with each full-body harness to ensure that personnel involved in a fall can stand up in their harness to prevent loss of circulation until they can be rescued.

5.4 Use of Personal Fall Arrest Equipment

5.4.1 A full-body harness with a shock-absorbing lanyard (see Figures 5.1 and 5.2) or self-retracting lifeline (see Figure 5.3) shall be continuously worn by personnel working at heights when exposed to a fall hazard of 1.8 m (6 ft) or greater (e.g., unprotected elevated areas, yellow-tagged scaffolds, aerial lifts). The 1.8 m (6 ft) distance shall be measured from the grade, floor or lower surface to the worker's feet.

5.4.2 The lanyard shall be properly anchored by the workers whenever they are exposed to a fall (e.g., when not protected by a complete guardrail system). At least one leg of "Y" lanyards and double-leg lanyards shall always be attached to an anchor point.

5.4.3 Lanyards shall be attached (i.e., "tied off") to an anchor point or horizontal/vertical lifeline that is high enough to prevent the worker from free falling more than 1.8 m (6 ft) or striking any lower level during a fall (e.g., shock-absorbing lanyards are to be attached at least 5.5 m [18 ft] above the impact surface). See Section 5.6.

5.4.4 Safety belts (i.e., body belts) shall not be used as part of a personal fall arrest system. Safety belts shall only be used when climbing poles or tree trunks.

5.4.5 Lanyards shall not be tied back onto themselves unless specifically designed by the lanyard's manufacturer for this use.

5.4.6 Lanyards shall not be connected together. Self-retracting lifelines (inertia reels) are to be used when a longer lanyard is needed.

5.4.7 Self-retracting lifelines shall not be connected to a lanyard, but shall be directly attached to the D-ring on the full-body harness.

5.4.8 Snap hooks shall not be attached together.

5.4.9 When tied around an “H” or “I” beam, the lanyard shall be used with a beam wrap (cross arm anchorage connector) or shall be specifically designed by the manufacturer for this use. Rope lanyards shall not be used for this purpose.

5.4.10 Lanyards shall not be tied into knots or tied off using knots.

5.4.11 Rough or sharp edges that could come in contact with the webbing of a full-body harness or lanyard shall be removed or covered.

5.4.12 Lanyards shall be wrapped around the body or otherwise secured when not in use to prevent tripping or snagging.

5.4.13 Fall arrest equipment that has been subjected to impact loading from stopping a fall shall be immediately removed from service and shall not be used again. However, self-retracting lifelines may be reused if they have been properly refurbished and tested by the original equipment manufacturer.

5.4.14 Safety devices that can be added to ladders to prevent falls, such as rope grabs or other approved descent-limiting devices, shall be used where practical. Rope grabs shall be ANSI Z359 compliant. See Figure 5.4.



Figure 5.4 Examples of Descent-Limiting Devices

5.5 Personal Fall Arrest Equipment Specifications

5.5.1 Personal fall arrest systems shall comply with ANSI Z359.1 (or equivalent as specified in writing by the SA Loss Prevention) and shall be labeled as such. Other types of fall protection equipment shall not be used and shall be removed from SA facilities and project sites.

5.5.2 Suspension trauma safety straps (foot stirrups) shall be provided with each full-body harness.

5.5.3 Fall arrest equipment shall limit the maximum arresting force on the user’s body to 818 kg (1,800 lb).

5.5.4 Full-body harnesses shall safely support 2,268 kg (5,000 lb) dead weight (i.e., minimum breaking strength).

5.5.5 Connectors shall be made of drop-forged, pressed or formed steel and shall have a corrosion-resistant finish. Surfaces and edges shall be smooth to prevent damage to other parts of the fall arrest system.

5.5.6 D-rings and snap hooks shall be capable of sustaining a minimum tensile load of 2,268 kg (5,000 lb) and shall be proof-tested by the manufacturer to a minimum tensile load of 1,633 kg (3,600 lb) without cracking, breaking or taking permanent deformation. D-rings and snap hooks shall be compatible to prevent rollout.

5.5.7 Snap hooks and carabiners shall be self-closing and self-locking.

5.5.8 Gates of snap hooks and carabiners shall be capable of withstanding a load applied in either the major or minor axis direction of 1,633 kg (3,600 lbs) without breaking, permanent deformation or distortion sufficient to release the gate.

5.5.9 Straps used as webbing or strength components in full-body harnesses shall be made of synthetic fibers.

5.5.10 Components of fall protection equipment shall be mutually compatible (e.g., from the same manufacturer).

5.5.11 Self-retracting lifelines shall limit free fall to 0.6 m (2 ft) or less and shall have components capable of sustaining a minimum static tensile load of 1,361 kg (3,000 lb) when fully extended.

5.5.12 Shock-absorbing lanyards shall:

A. Bring personnel to a complete stop and limit the maximum deceleration distance an individual travels to 1.07 m (3.5 ft).

B. Not exceed 1.8 m (6 ft) in length.

C. Safely support 2,268 kg (5,000 lb) dead weight (i.e., minimum breaking strength).

D. Limit the arresting force to 408 kg (900 lb).

F. Be labeled by the manufacturer as meeting ANSI Z359.1.

G. Not be made of wire rope.

H. If a "Y" lanyard or double-leg lanyard be marked with the following warnings which shall be followed:

- Connect only the center snap hook to the D-ring on the full-body harness.
- Do not attach the leg of the lanyard which is not in use to the harness, except to attachment points specifically designated by the manufacturer for this purpose.

- Do not modify the lanyard to allow more than 6 ft (1.8 m) of free fall.
- Do not allow the any part of the lanyard to pass under arms, between legs or around the neck.

5.6 Anchor Points and Lifelines

5.6.1 Anchor points for lanyards and self-retracting lifelines shall:

A. Be capable of supporting at least 2,268 kg (5,000 lb) per person attached.

B. Not be guardrails, standpipes, vents, small diameter piping systems, cable trays, electrical conduit or other structures that cannot safely support 2,268 kg (5,000 lb) dead weight (e.g., about the weight of a car).

C. Be high enough (preferably above shoulder height) to prevent personnel from free falling more than 1.8 m (6 ft) or striking any lower level during a fall.

D. Not be located so as to cause loss of balance or a body position that would increase the risk of fall during attachment and detachment of the lanyard.

E. Be free of sharp edges.

F. Be located above the crane hook during personnel platform (manbasket) operations.

5.6.2 Horizontal lifelines (see Figure 5.5) shall:

A. Be a minimum 12 mm (1/2 inch) diameter wire rope having a breaking strength specified by the manufacturer of at least 9,000 kg (20,000 lb). Other materials, such as manila, nylon or polypropylene rope, shall not be used as a horizontal lifeline.

B. Have a safety factor of at least two against failure (including anchor points) and be capable of supporting 2,268 kg (5,000 lb) per person attached, applied anywhere along the lifeline.

C. Be designed by a degreed structural engineer, and the material specifications, calculations and drawings shall be submitted to the SAPO for review prior to installation.

D. Not have an unloaded sag at the center of the lifeline greater than 30 cm (12 inches) for every 10 m (33 ft) of lifeline length between anchor points and have a means of tensioning, e.g., turnbuckles.

E. Have no more than three persons attached at one time between anchor points, unless designed by a degreed structural engineer in accordance with the above safety factor for the maximum number of persons expected to be attached to the lifeline at one time.

F. Be installed at the highest possible point, preferably above shoulder height.

G. Have softeners where the lifeline could contact sharp edges.

H. Be free of splices.

I. Be removed when no longer needed.



Figure 5.5 Horizontal Lifeline

5.6.3 Vertical lifelines (see Figure 5.6) shall:

A. Have only one person attached at a time.

B. Be attached to an anchor point that is capable of supporting at least 2,268 kg (5,000 lb) dead weight.

C. Be made from wire rope with a minimum diameter of 10 mm (3/8 inch).

D. Have softeners where the lifeline could contact sharp edges.

E. Be used with rope grab devices or with connectors designed for shock-absorbing lanyard attachments.

F. Be removed when no longer needed.



Figure 5.6 Vertical Lifeline with Rope Grab

5.7 Training

Personnel performing work at heights and their supervisors shall:

A. Be trained in the nature of fall hazards in the work area.

B. Be trained in use, inspection and maintenance of fall protection equipment.

C. Demonstrate competency by successfully passing written and practical tests.

D. Undergo refresher training at least every 3 years.

6. Concrete Construction

6.1 Purpose

This chapter describes minimum safety requirements for concrete construction work, including concrete formwork, prestressed concrete, precast concrete and masonry.

6.2 References

Saudi Aramco (SA) General Instructions (GIs):

GI 2.702, *Moving Drilling Rigs, High Clearance Equipment/Loads, or Operating Cranes Under or Near Power-Lines*

GI 8.001, *Safety Requirements for Scaffolds*

SA Engineering Standards (SAESs):

SAES-Q-001, *Criteria for Design and Construction of Concrete Structures*

SAES-Q-012, *Criteria for Design and Construction of Precast and Prestressed Concrete Structures*

American Concrete Institute (ACI):

ACI 347, *Guide to Formwork for Concrete*

ACI 347.2R, *Guide to Shoring/Reshoring of Concrete Multistory Buildings*

ACI SP-4, *Formwork for Concrete*

American National Standards Institute (ANSI)/American Society of Safety Engineers (ASSE):

ANSI/ASSE A10.9, *Safety Requirements for Masonry and Concrete Work*

American Society of Civil Engineers (ASCE):

ASCE 37, *Design Loads on Structures During Construction*

U.S. Code of Federal Regulations (CFR):

29 CFR 1926, Subpart Q, *Concrete and Masonry Construction*

6.3 General Requirements

6.3.1 Personnel working at heights more than 1.8 m (6 ft) shall be provided with proper work platforms with a complete guardrail system. Otherwise, a full body harness and shock-absorbing lanyard shall be worn and securely attached to a lifeline or substantial anchorage. See Chapter II-5, *Fall Protection,* of this manual.

6.3.2 No construction loads shall be placed on a concrete or masonry structure or a portion thereof unless the contractor determines that the structure or portion of the structure is capable of supporting the loads. Structural capabilities shall be verified by a degreed structural engineer.

6.3.3 Bulk storage bins, containers or silos shall have conical or tapered bottoms with mechanical or pneumatic means of initiating the flow of material.

6.3.4 Personnel shall not be permitted to perform maintenance or repair activities on equipment used for concrete and masonry construction activities (such as compressors, mixers, screens or pumps), unless all potentially hazardous energy sources have been properly isolated. See Chapter I-5, *Isolation, Lockout and Use of Hold Tags*.

6.3.5 All concrete construction activities covered by this chapter shall be supervised by a competent person(s) who is knowledgeable and experienced in the type of work to be performed, including potential hazards of that work and associated hazard control measures.

6.4 Formwork

6.4.1 Formwork shall be designed, erected, supported, braced and maintained in accordance with SAES-Q-001, ACI 347, ACI 347.2R, ACI SP-4, ANSI/ASSE A10.9, GI 8.001, ASCE 37 and the requirements in this chapter.

6.4.2 Formwork shoring, personnel access platforms, etc., constructed of scaffolding materials (e.g., tube-and-coupler or system scaffolding components) shall comply with GI 8.001. Formwork shoring constructed of scaffolding materials and supporting an elevated concrete slab/deck more than 100 mm (4 inches) thick shall be classified as a "special scaffold" per GI 8.001.

6.4.3 Drawings and plans shall be prepared for all elevated formwork. These drawings and plans shall show the needed forms, formwork shoring, jack layout, working decks, personnel access scaffolding that is integral with the formwork, etc. Formwork drawings and plans shall be reviewed and approved by a degreed structural engineer. Approved

formwork drawings and plans shall be available at the job site. Formwork shall be erected in full compliance with the approved drawings and plans.

6.4.4 Structural engineering design calculations shall be prepared by a degreed structural engineer for all elevated formwork. These calculations shall ensure that vertical and lateral loads to be imposed upon the formwork, including during placement of concrete, will be safely supported.

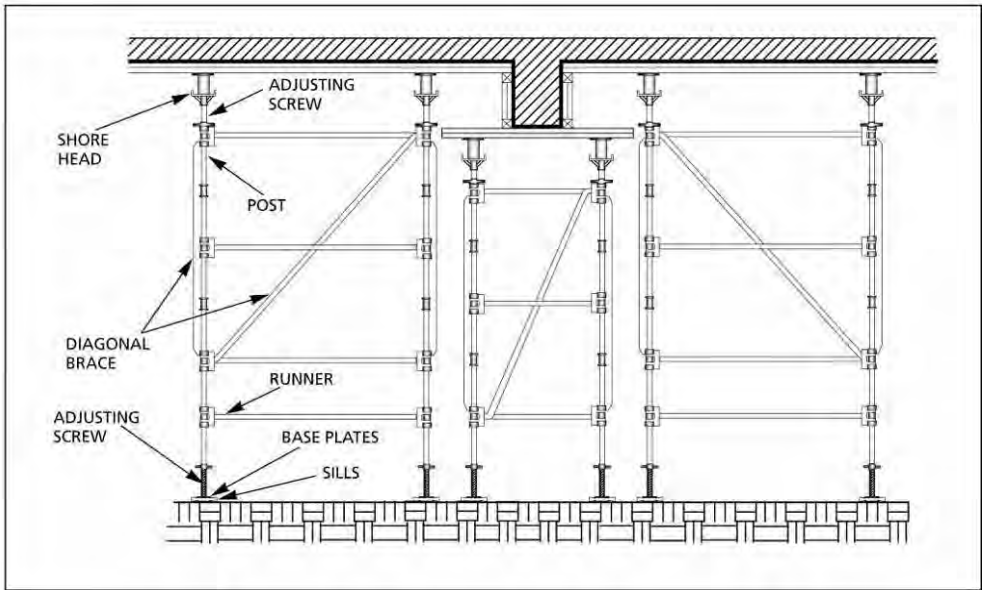

Figure 6.1 System Scaffolding Formwork Shoring

6.4.5 The SA proponent organization (SAPO) may require additional review of formwork design calculations and drawings.

6.4.6 Formwork shall be designed for a live load of not less than 2.4 kN/m^2 (50 lb/ft^2) of horizontal projection. When motorized carts are used, the live load shall not be less than 3.6 kN/m^2 (75 lb/ft^2). The design load for combined dead and live loads shall not be less than 4.8 kN/m^2 (100 lb/ft^2), or 6.0 kN/m^2 (125 lb/ft^2) if motorized carts are used. Dead load is the weight of formwork plus the weight of freshly placed concrete. Live load includes the weight of personnel, equipment, materials and other temporary gravity loads.

6.4.7 A minimum safety factor of four against failure from all dead and live loads shall be used for design of tubular steel formwork shoring (see the SA *Scaffolding Structural Design Criteria*, which is available from the Loss Prevention, Technical Services Unit).

6.4.8 Fabricated tubular frame scaffolding (see Chapter II-2, *Scaffolding*) shall not be used for formwork. Other types of metal tubular welded frames that are specifically designed for use as formwork may be used if permitted by the SAPO in consultation with the SA Consulting Services Department (CSD).

6.4.9 If system scaffolding is used for formwork shoring, only SA-approved types of system scaffolding shall be used. Refer to Chapter II-2, *Scaffolding*, Section 2.7.1, for approved system scaffolding. See Figure 6.1 for an example of system scaffolding formwork shoring.

6.4.10 Formwork shoring, access platforms, etc., constructed of scaffolding materials shall be erected under the direct, on-site supervision of a SA-certified Scaffold Supervisor, as per GI 8.001.

6.4.11 Formwork shoring sills shall be sound, rigid and capable of safely carrying the maximum intended load.

6.4.12 Formwork materials shall be inspected for damage or defects by an authorized person prior to erection. Damaged or defective materials shall not be used for formwork and shall be immediately removed from the site.

6.4.13 Formwork shoring, access platforms, etc., constructed of scaffolding materials shall be inspected and tagged as per GI 8.001. Other types of formwork shall be inspected by an authorized person. These inspections shall occur immediately prior to placement of concrete and shall verify that the formwork is constructed as per the formwork drawings and the requirements of this chapter.

6.4.14 Formwork shoring shall be plumb in both directions, with the maximum allowable deviation from the vertical not more than 3 mm/m (1/8 inch per 3 ft).

6.4.15 Erected formwork that becomes damaged or weakened shall be immediately reinforced or reshored.

6.4.16 Reshoring shall be provided, as necessary, to safely support concrete slabs and beams after stripping, or where members are subjected to superimposed loads due to construction work. Formwork shall be strengthened to meet the intended loads when used for temporary storage areas for reinforcing rods, materials or equipment.

6.4.17 Personnel shall not be allowed under or near formwork during concrete pour operations.

6.4.18 Personnel not engaged in concrete pour operations shall stay clear of the pour area.

6.4.19 Stripped forms and formwork shall be stockpiled promptly after stripping. Protruding nails, wire ties, etc., shall be bent over, pulled, cut or other means taken to eliminate the hazard.

6.4.20 Placement of concrete or construction materials on partially completed formwork shall not be permitted.

6.4.21 Tube-and-Coupler Formwork Shoring (see Figure 6.2 for an example)

A. Couplers (clamps) shall not be used if they are deformed, broken, have defective or missing threads on bolts, or other defects.

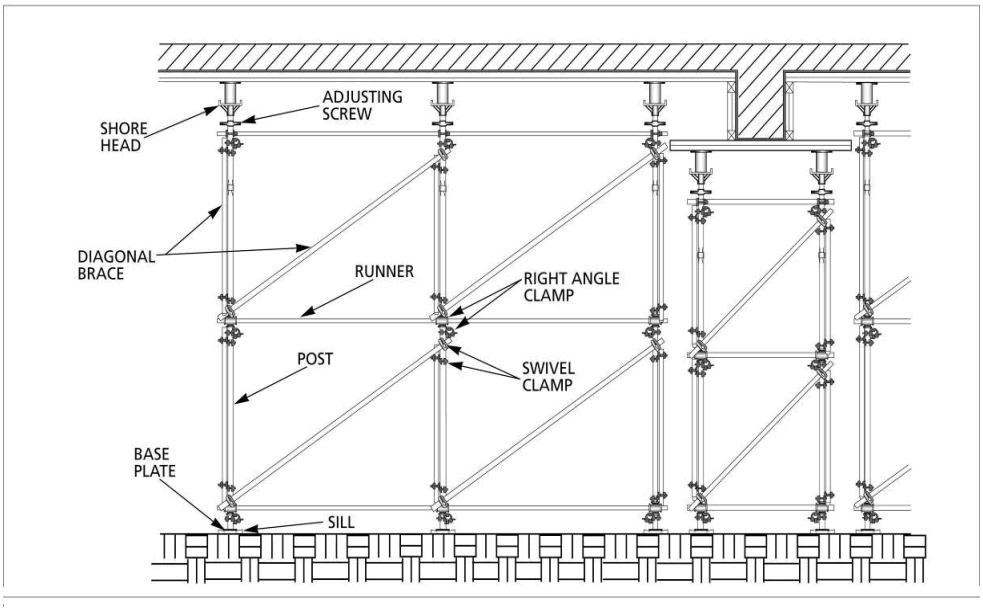

Figure 6.2 Tube-and-Coupler Formwork Shoring

B. Tube-and-coupler formwork shoring materials shall meet the requirements of Chapter II-2, *Scaffolding*. All tubing used for formwork shall be "embossed."

C. Connection of tubular members and tightness of couplers shall be checked prior to placement of concrete.

D. Base plates, shore heads, extension devices and screwjacks shall be in firm contact with the footing sill and form materials.

6.4.22 Single Post Shores (see Figure 6.3 for an example)

A. Single post shores shall be horizontally braced in both directions.

B. Diagonal bracing shall be installed as the shores are being erected.

C. Single post shoring base plates and shore heads shall be in firm contact with the footing sill and form materials.

D. Whenever single post shores are used in more than one tier, a layout drawing shall be submitted to the SAPO for approval prior to construction, and the shoring shall be inspected and approved by a degreed structural engineer prior to concrete placement.

E. When single post shoring is at an angle or sloping, or when the surface shored is sloping, a layout drawing shall be submitted to the SAPO for approval prior to construction, and the shoring shall be inspected and approved by a degreed structural engineer prior to concrete placement. The shoring shall be properly designed by a degreed structural engineer for the loading.

F. Adjustment of single post shores to raise formwork shall not be made after concrete is in place.

G. Fabricated single post shores and/or adjusting devices shall not be used if heavily rusted, bent, dented, rewelded, have broken weldments or other defects. If they contain timber, they shall not be used if the timber is split, cut, has sections removed, is rotted or otherwise structurally damaged.

H. Timber and adjusting devices to be used for adjustable timber single post shores shall be inspected by a qualified person before erection.

I. Nails used to secure bracing or adjustable timber single post shores shall be driven fully. The protruding point of any nails shall be bent over, if possible.

J. Single post shores shall not be stacked vertically.

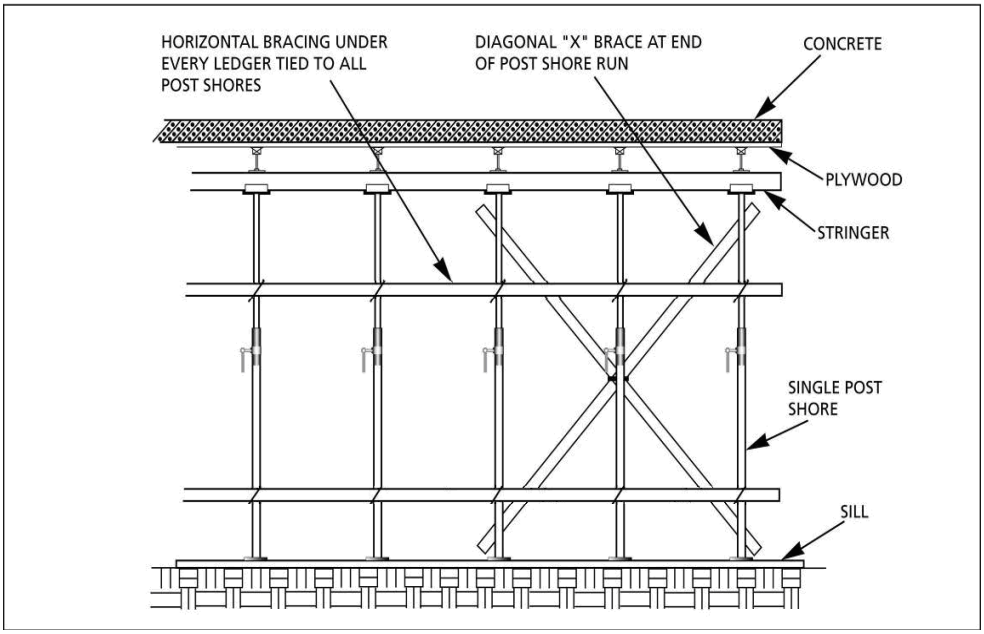

Figure 6.3 Single Post Shores

6.4.23 Vertical Slip Forms

A. The steel rods or pipe on which the jacks rise or by which the forms are lifted shall be designed for the purpose. These rods shall be adequately braced where not encased in concrete.

B. Jacks and vertical supports shall be placed so that the vertical loads are distributed equally and do not exceed the capacity of the jacks.

C. The jacks or other lifting devices shall be provided with automatic holding devices.

D. Lifting shall not exceed the predetermined safe rate of lift or concrete cure.

E. Lateral and diagonal bracing of the form structure shall be provided to prevent excessive distortion during the jacking operations.

F. The form structure shall be maintained in line and plumb during jacking operations.

G. Vertical lift forms shall be provided with scaffolding or a work platform completely encircling the area of placement with intermittent ties to ensure that additional, unplanned loads on the scaffold/work platforms cannot pull down the entire scaffold works.

6.5 Reinforcing Steel Construction

6.5.1 All protruding reinforcing steel onto which employees could fall shall be guarded to eliminate the hazard of impalement.

6.5.2 Personnel shall not be permitted to work above vertically protruding reinforcing steel, unless it has been bent over or provided with a protective cover (e.g., capped).

A. Protective covers shall have a minimum 100 mm (4 inches) by 100 mm (4 inches) square surface area, or if round, a minimum diameter of 115 mm (4.5 inches).

B. Protective covers shall be certified by the manufacturer to withstand the impact of a 115 kg (250 lbs.) weight dropped from a height of 3 m (10 ft) without penetration failure of the cover.

Note: Rebar caps with integral metal plates within the cap shall be deemed to meet the impact requirements of §6.5.2.B, above.

C. Job-built protective covers shall either be designed as specified by a degreed structural engineer, or meet one of the designs as shown in Figure 6.5. Job built protective covers shall meet the impact requirements of §6.5.2.B, above.



Figure 6.4 Example of square rebar protective cover with integral metal plate

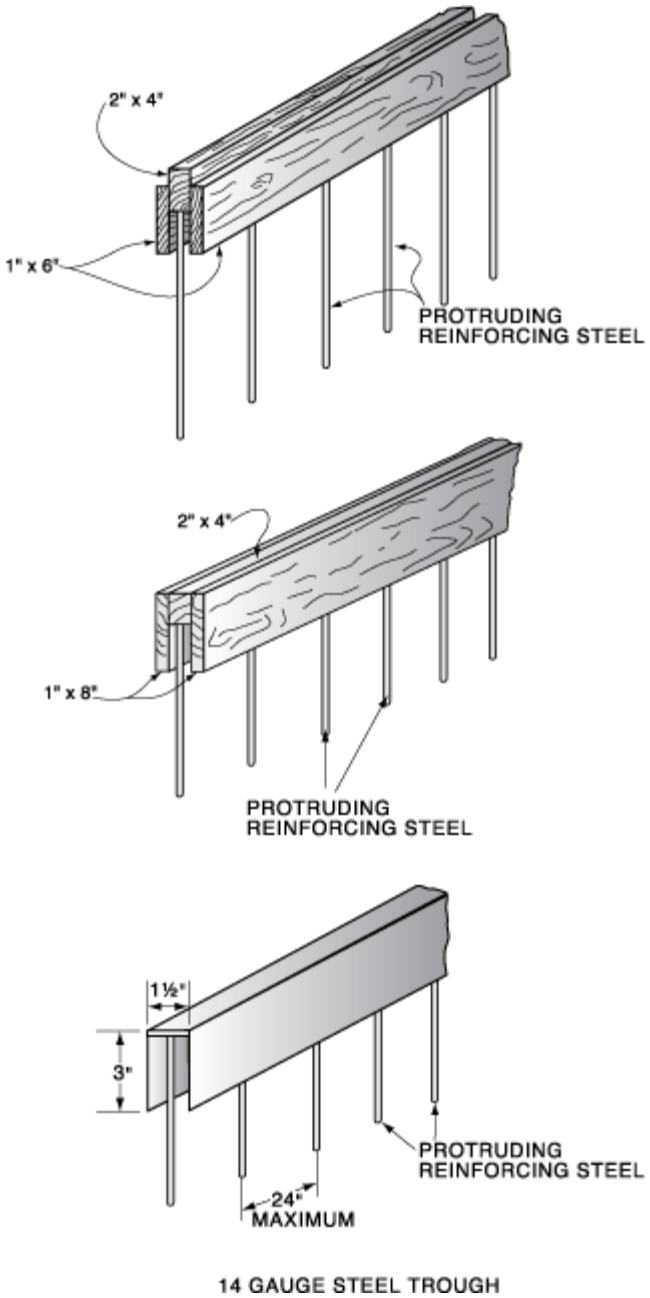

Figure 6.5 Acceptable job-built protective cover designs

6.5.3 Reinforcing steel for walls, piers, columns and similar vertical formwork structures shall be braced and supported to prevent collapse and to protect against possible wind loads.

6.5.4 Wire mesh rolls shall be secured at each end to prevent dangerous recoiling action.

6.5.5 Protruding reinforcing steel used for purposes other than reinforcing concrete (e.g., formwork bracing, survey marking) shall be removed when no longer needed.

6.6 Concrete Placement

6.6.1 Loading skips with a capacity of 0.75 m^3 (1 $yard^3$) or larger shall be equipped with a mechanical device to clear the skips of concrete.

6.6.2 Mixers of 0.75 m^3 (1 $yard^3$) capacity or greater shall be equipped with a mechanical device to clear the skip of materials and protective guardrails installed on each side of the skip.

6.6.3 Bull float handles, where they may contact energized electrical conductors, shall be constructed of nonconductive material or be insulated with a nonconductive protection sheath.

6.6.4 Manually guided, powered and rotating-type concrete troweling machines shall be equipped with an automatic control switch ("dead man" switch) that will automatically shut off the power whenever the operator removes their hands from the equipment handles. The rotating blades shall be guarded at the top and outer perimeter.

6.6.5 Handles of concrete buggies shall not extend beyond the wheels on either side of the buggy. Knuckle guards are to be installed on buggy handles to protect the worker's hands.

6.6.6 Pumpcrete Systems

A. Pumpcrete or similar systems using discharge pipes shall be provided with pipe supports designed for at least 100% overload (safety factor of at least two).

B. Hoses in pumpcrete or similar systems shall be provided with joint connectors with a positive locking mechanism and safety chain/pin to prevent separation of the sections.

C. Pumpcrete outriggers shall be in place and outrigger pads used. Outrigger pads shall be at least three times larger in area than the outrigger float.

D. Pumpcrete machines shall maintain minimum clearance distances from overhead power lines in accordance with GI 2.702.

6.6.7 Concrete Buckets

A. Personnel shall not be permitted to ride concrete buckets.

B. Personnel shall not be permitted to work under concrete buckets while buckets are being elevated or lowered into position.

C. Concrete buckets equipped with hydraulic or pneumatically operated gates shall have positive safety latches or similar safety devices installed.

D. Vibrator crews shall not stand or work under elevated concrete buckets suspended from cranes or cableways.

6.6.8 The wheels of ready-mix trucks shall be blocked and the brakes set to prevent movement.

6.6.9 A spotter shall be used when ready-mix trucks are traveling in reverse (e.g., backing into position).

6.6.10 Personnel shall wear appropriate personal protective equipment (PPE), including eye protection, when placing or working with uncured concrete. See Chapter I-3, *Personal Protective Equipment (PPE).*

6.6.11 Wherever concrete is being mixed, poured or finished, eye flushing equipment shall be readily available.

6.7 Prestressed Concrete

6.7.1 General

A. Field operations shall be under the supervision of a qualified person.

B. Personnel involved in prestressing or post-tensioning shall be instructed in and follow safe work procedures.

C. Appropriate personal protective equipment (PPE), including eye protection, shall be worn by all personnel involved in grouting, stressing and cable trimming operations.

6.7.2 Prestressing and Post-tensioning

A. Any site operation providing prestressed concrete members for a project shall be set up and organized in accordance with ANSI 10.9 and any references therein.

B. Concrete prestressing and post-tensioning operations shall be performed according to the project specifications and design drawings. A copy of this information shall be available on site while work is being performed.

C. Visual and/or audible signaling devices shall be provided and used in the area of tensioning operations to warn personnel approaching the area.

D. Personnel not directly involved in tensioning or detensioning operations shall be kept clear of the danger area and shall remain clear until operations are completed.

E. Signs, signals and barriers shall be provided to prevent personnel from being behind the jack and/or anchor plates during tensioning operations.

F. During prestressing operations, personnel shall be protected by guards or other suitable devices at the tensioning ends and anchoring points to contain the flying strands, etc., in the event of strand failure.

G. The supervisor shall ensure that operators are given the maximum allowable values for both stretch of the tendon and hydraulic pressure at the pump.

H. If there is a significant difference between the expected value and the measured value for either stretch of a tendon or hydraulic pressure at the pump, personnel shall stop operations on that particular tendon and consult with the site engineer to obtain instructions on how to proceed.

I. Each jack pressure gauge shall be checked at frequent intervals against a master gauge and the site engineer shall be furnished with a calibration chart.

J. Strand elongation and strand deflection shall be measured by a means which does not expose personnel to risk of injury.

6.7.3 Tendons

A. Tendons shall be stored and handled to prevent rusting or pitting, to avoid nicks or kinks, and to prevent damage from welding equipment or cutting torches operated near tendons. Tendons shall be kept clean at all times.

B. When tendons are to be cut for gripping or splicing, only shears or high-speed abrasive wheels shall be used.

C. When tendons are pulled through ducts or voids in the concrete, precautions shall be taken to prevent mechanical damage to tendons.

D. A suitable coil-handling device shall be used if there is risk of injury from handling coiled tendons.

E. Welding, burning or other work shall not be permitted on any surface where strands have been strung or tensioned, unless proper care is taken to protect the strands from sparks or other heat sources and from stray electric current.

6.7.4 Fittings

A. In utilizing anchor fittings on tendons, the recommendations and instructions of the manufacturer/supplier shall be followed.

B. Tools, strand vises or other devices shall be kept clean, lubricated and in good repair to prevent failure. Worn or distorted devices shall be discarded.

C. Strand couplers shall not be reused until they have been inspected by a qualified person and determined to be safe for reuse.

6.7.5 Jacking

A. Jacking equipment shall be inspected by a qualified person for visible signs of defect or other signs of failure immediately before daily jacking operations. During jacking of any tendons, the anchors shall be kept turned up close to the anchor plate.

B. Hydraulic hoses shall be inspected for flaws, leaks or bubbles after each stressing operation and any damaged hoses shall be immediately removed from service.

C. The hydraulic system shall be regularly inspected for oil leaks and other damage and necessary corrective actions taken.

D. All jacks shall be secured to suitable anchors before they are installed on a cable for tensioning.

E. Personnel shall not be permitted to stand in line or directly over jacking equipment during tensioning operations.

6.8 Precast Concrete

6.8.1 Precast concrete casting, handling and erection shall be performed under the supervision of a qualified person and in accordance with SAES-Q-012.

6.8.2 Precast concrete members stored on-site shall be supported to prevent tipping. The base shall be level and stable to prevent differential settlement. Stacking of members shall be such that lifting attachments will be undamaged and accessible.

6.8.3 Personnel performing handling and erection operations shall be trained in the proper methods of handling and erecting precast concrete members.

6.8.4 Precast concrete members shall be handled in a position consistent with their shape and design, including as stated on the shop and/or erection drawings. They shall be handled at the lifting points designated on the shop and/or erection drawings using only compatible lifting attachments.

6.8.5 Lifting hardware shall be designed to provide sufficient strength to withstand the imposed loads with a minimum safety factor of at least five (5).

6.8.6 Lifting inserts which are embedded or otherwise attached to tilt-up precast concrete members shall have a minimum safety factor of at least two (2).

6.8.7 Lifting inserts which are embedded or otherwise attached to precast concrete members, other than the tilt-up members, shall have a minimum safety factor of at least four (4).

6.8.8 Precast concrete wall units, structural framing, or tilt-up wall panels shall be braced until permanent connections are completed. Temporary supports or bracing shall be designed by or approved by a degreed structural engineer to withstand not less than 0.7 kN/m^2 (15 lb/ft^2) on projected surfaces. Permanent connections may be used instead of bracing, provided they are designed to withstand all loads imposed during construction and attachments are made under the supervision of a qualified person.

6.8.9 Personnel shall not be permitted under precast concrete members being lifted or tilted into position.

6.8.10 Barricades, warning signals and signs shall be provided to safeguard traffic and people in the immediate area of all handling and erection operations.

6.9 Masonry Construction

6.9.1 Masonry construction shall be performed under the supervision of a qualified person.

6.9.2 Masonry units shall be stored on a firm and level support.

6.9.3 Masonry materials placed on a scaffold shall not cause the rated capacity (i.e., load duty rating) of the scaffold to be exceeded. See GI 8.001, *Safety Requirements for Scaffolds*, and Chapter II-2, *Scaffolding*, of this manual.

6.9.4 Loose bricks shall not be stacked more than 2.1 m (7 ft) high. When a loose brick stack reaches a height of 1.2 m (4 ft), it shall be tapered back 5 cm per 0.3 m (2 inches per foot) of height above the 1.2 m (4 ft) level. When loose masonry blocks are stacked higher than 1.8 m (6 ft), the stack shall be tapered back one-half of the block height per tier above the 1.8 m (6 ft) level.

6.9.5 In removing masonry units, stacks shall be kept level and the step back maintained.

6.9.6 Masonry walls over 2.4 m (8 ft) in height shall be shored and/or braced until the designed lateral strength is reached. The support or bracing shall be designed by or approved by a degreed structural engineer to withstand a minimum of 0.7 kN/m^2 (15 lb/ft^2) lateral load.

6.9.7 Masonry saws shall be guarded by a semicircular enclosure over the blade. The maximum angular exposure of the blade periphery shall not exceed 180 degrees. The guard design shall retain fragments of the blade in case it shatters while in use. See Chapter I-11, *Hand Tools and Power Tools*, for further requirements.

6.9.8 Masons' scaffolds shall be designed, constructed and maintained in accordance with GI 8.001, *Safety Requirements for Scaffolds*, and Chapter II-2, *Scaffolding*, of this manual.

6.9.9 Masons' scaffolds and other working surfaces shall be kept clear of scrap, debris, unneeded materials and tools that could create a hazard.

6.9.10 A limited access zone shall be established whenever a masonry wall is being constructed. The limited access zone shall:

- Be established prior to the start of masonry wall construction.
- Be established at a distance from the wall equal to the finished height of the wall plus 1.2 m (4 ft), and shall run along the entire length of the finished wall.
- Be established on any side of the wall onto which the wall could overturn or collapse (e.g., be on both sides of a freestanding wall).
- Be restricted to entry by personnel actively engaged in constructing the wall; other persons shall not be permitted to enter the zone.
- Remain in place until the wall is adequately supported to prevent overturning or collapse.

7. Steel Erection

7.1 Purpose

This chapter describes minimum requirements for controlling safety hazards associated with steel erection activities during construction, alteration and/or repair of facilities containing structural steel.

7.2 References

Saudi Aramco (SA) General Instructions (GIs):

GI 7.025, *Heavy Equipment Operator Testing and Certification*

GI 7.026, *Crane and Heavy Equipment Incident Reporting Procedures*

GI 7.027, *Crane Suspended Personnel Platform (Manbasket) Operations*

GI 7.028, *Crane Lifts: Types and Procedures*

GI 7.029, *Rigging Hardware Requirements*

GI 7.030, *Inspection and Testing Requirements for Elevating/Lifting Equipment*

American National Standards Institute (ANSI)/American Society of Safety Engineers (ASSE):

ANSI/ASSE A10.13, *Safety Requirements for Steel Erection*

American Institute of Steel Construction (AISC):

Code of Standard Practice for Steel Buildings and Bridges

SA Materials System Specification (SAMSS):

12-SAMSS-008, *Erection of Structural and Miscellaneous Steel*

U.S. Code of Federal Regulations (CFR):

29 CFR 1926, Subpart R, *Steel Erection*

7.3 Planning and Site Preparation

7.3.1 Site-specific erection plans shall be developed and shall include, but not be limited to:

A. Coordination of steel erection activities with other applicable parties, such as emergency responders.

B. Material deliveries, material staging/storage and construction activities

C. Description of crane and derrick selection and placement procedures, which shall include:

- Site preparation.
- Path of overhead lifts.
- Critical lifts, including rigging and equipment.

D. Description of steel erection activities and procedures, including the following:

- Stability considerations requiring temporary bracing or guying.
- Erection bridging terminus points.
- Notifications regarding repair, replacement or modification of anchor bolts (anchor rods).
- Columns and beams (including joists and purlins).
- Connections.
- Decking.
- Routes of travel up and around the structure.
- Ornamental and miscellaneous steel.

E. Description of fall protection procedures, including use of prefabricated anchorage (tie-off) points.

F. Description of procedures for prevention of falling objects.

G. Hazard identification plan (HIP), including special procedures required for hazardous or nonroutine tasks.

H. Minimum training/certification requirements for steel erection personnel (see Section 7.21).

I. List of steel erection personnel and the training/certification they have each received, including the designated competent person(s) who will be in charge of the steel erection.

J. Description of rescue or emergency response procedures.

7.3.2 Erection plans shall be signed and dated by the appropriate personnel (e.g., the steel fabrication shop's detailer and/or structural design engineer).

7.3.3 Appropriate approval shall be obtained from the SA proponent organization (SAPO) prior to commencing steel erection work.

7.3.4 Site planning meetings and site inspections shall be conducted between steel erectors and the SAPO, including the project engineer, to ensure that all hazards have been identified and addressed. These hazards and their

respective mitigation measures shall be incorporated in the HIP included with the site-specific erection plans.

7.3.5 Before steel erection work is permitted to commence, the following shall be confirmed:

A. Concrete in footings, piers and walls has been cured to a level that will provide adequate strength to support any forces imposed during steel erection.

B. Anchor bolt repairs, replacements and modifications were performed with the approval of the project structural engineer.

7.4 Site Layout

7.4.1 The SAPO and contractors shall ensure that the following are provided and maintained:

A. Adequate access roads for the safe delivery and movement of derricks, cranes, trucks and other necessary equipment.

B. Means and methods for pedestrian and vehicle control.

C. Firm, properly graded, drained and readily accessible work sites with adequate space for safe material storage and safe erection operations.

D. Site shall be barricaded/fenced and provided with adequate lighting.

7.5 Preplanning

7.5.1 Routes for moving suspended loads shall be preplanned to ensure that personnel are not required to work directly below a suspended load.

7.5.2 The routes for moving suspended loads shall be assessed and necessary measures implemented to minimize against potential damage to equipment and adjacent facilities.

7.5.3 When possible, motorized aerial lifts (e.g., scissor lifts, aerial work platforms, „JLG“ lifts) shall be used for bolting up (connecting) steel members to eliminate the need for personnel to work from the partially erected steel structure.

7.6 Fall Protection Requirements

7.6.1 Steel erection personnel performing activities on walking/working surfaces with unprotected sides or edges more than 1.8 m (6 ft) above a lower level shall be protected by a guardrail system, safety net system, personal fall arrest system, etc.

7.6.2 Fall protection shall be in accordance with the requirements in Chapter II-5, *Fall Protection*, of this manual.

7.6.3 Perimeter safety cables shall be installed prior to installation of metal decking and shall meet the criteria for guardrail systems.



7.6.4 Personnel working in a controlled decking zone (CDZ) at elevations of 1.8 m (6 ft) or greater shall be protected from fall hazards (see photo).

7.6.5 CDZs may be established in areas of the structure 4.5-9.5 m (15-30 ft) above a lower level where metal decking is initially being installed and where it forms the leading edge of a work area.

7.6.6 The following shall apply for CDZs:

A. Personnel working at the CDZ‟s leading edge shall be protected from falling whenever they could fall more than 1.8 m (6 ft).

B. CDZ access shall be limited to personnel engaged in leading-edge work.

C. CDZ boundaries shall be established and clearly marked by use of control lines or equivalent. See Section 7.6.7.

D. Personnel working in CDZs shall have completed proper CDZ training.

E. Unsecured CDZ decking shall not exceed 280 m^2 (3,000 ft^2).

F. CDZ safety deck attachments shall be installed from the leading edge back to the control line and shall be fully secured with screws, per manufacturer‟s recommendations.

7.6.7 Control lines shall be established to control access to CDZs and shall:

A. Be erected not less than 1.8 m (6 ft) and no more than 27.4 m (90 ft) from the leading edge.

B. Extend the entire length of and be parallel to the unprotected leading edge.

C. Be connected on each end to a proper guardrail system, wall, stanchion or other suitable anchorage.

D. Not be closer than 1 m (39 inches) nor more than 1.3 m (45 inches) from walking/working surfaces.

7.6.8 Fall protection equipment, including full-body harnesses, shall be inspected daily to ensure that it has not been damaged and is in good condition.

7.6.9 Materials, equipment and tools not in use while working at heights shall be secured against displacement.

7.7 Hoisting and Rigging

7.7.1 Hoisting and rigging during steel erection shall be in accordance with GIs 7.025, 7.027, 7.028, 7.029 and 7.030 (see Chapter III-7, *Cranes and Lifting Equipment*, for further details).

7.7.2 Crane operators shall be SA-certified and shall be responsible for crane operations under their direct control.

7.7.3 Whenever there is any doubt as to safety of the lift, the crane operator shall:

A. Stop all hoisting activities.

B. Refuse to handle unsafe loads.

7.7.4 The following criteria shall apply when working with suspended loads:

A. Materials being hoisted shall be rigged to prevent unintentional displacement.

B. Hooks with self-closing safety latches, or their equivalent, shall be used to prevent components from slipping out of the hook.

C. Loads shall be lowered in a controlled and slow manner when the load is near personnel.

7.7.5 The total load shall not exceed the rated capacity of the hoisting and rigging equipment. See Chapter III-8, *Slings and Rigging Hardware*.

7.7.6 A "come-a-long" (a mechanical device usually consisting of a chain or cable attached at each end, that is used to facilitate movement of materials through leverage) shall not be used for hoisting steel or equipment.

7.8 Structural Stability

7.8.1 Structural stability shall be maintained at all times during the steel erection process.

7.8.2 The steel erector shall, at all times, be responsible for the adequacy and installation of any temporary bracing or guy cables required to counteract loadings imposed during erection. This responsibility shall also extend to temporary bracing required to ensure safe and stable conditions of partially completed structural assemblies.

7.8.3 The following additional requirements shall apply for multistory structures:

A. Permanent floors shall be installed as the erection of structural members progresses.

B. There shall not be more than eight (8) floors between the erection floor and the uppermost permanent floor, except where structural integrity is maintained as a result of the design.

C. There shall not be more than four (4) floors or 14.6 m (48 ft), whichever is less, of unfinished bolting or welding above the foundation or uppermost permanently secured floor, except where structural integrity is maintained as a result of the design.

D. Fully planked/decked floors or safety nets shall be maintained within two (2) floors or 9.1 m (30 ft), whichever is less, directly under workers performing steel erection work.

7.9 Walking / Working Surfaces

7.9.1 To prevent tripping hazards, shear connectors (e.g., headed steel studs, steel bars or steel lugs), reinforcing bars, deformed anchors or threaded studs shall not be attached to the top flanges of beams, joists or beam attachments so that they project vertically from or horizontally across the top flange of the member until after the metal decking or other walking/working surface has been installed.

7.9.2 Personnel shall not walk on the top surface of any structural steel member coated with paint or similar material unless documentation certifies that the coating has a minimum average slip resistance of 0.5. The test results shall be available on-site.

7.9.3 When shear connectors are used in construction of composite floors, roofs and bridge decks, they shall be laid out and installed after the metal decking has been installed, so the metal decking may serve as a working platform.

7.9.4 Shear connectors shall not be installed from within a CDZ.

7.9.5 Free climbing of columns (or skeletal steel) shall not be permitted.

7.10 Plumbing Up

7.10.1 Plumbing-up equipment shall be installed in conjunction with the steel erection process to ensure the stability of the structure.

7.10.2 Plumbing-up equipment shall be in place and properly installed before the structure is loaded with construction materials (e.g., loads of joists, bundles of decking or bundles of bridging).

7.10.3 The structure shall be plumbed, leveled and braced before any final bolted or welded connections are made.

7.10.4 Plumbing-up equipment shall only be removed with prior approval from the designated competent person in charge at the site.

7.11 Column Anchorage

7.11.1 Columns shall be anchored by a minimum of four anchor bolts.

7.11.2 Columns shall be set on level, finished floors, pregrouted leveling plates, leveling nuts or shim packs which are adequate to transfer the loads.

7.11.3 Guying or bracing shall be used and installed properly as per the site-specific erection plan or as determined by the project structural engineer.

7.11.4 When required on the drawings, anchor bolts shall be tightened to the specified tension. Anchor bolts shall be fully tightened to the specified tension only after the base plates have been grouted.

7.12 Repair, Replacement or Field Modification of Anchor Bolts

7.12.1 Anchor bolts shall not be repaired, replaced or field-modified without prior approval as per the site-specific erection plan.

7.12.2 Prior to column erection, the SAPO shall provide written notification to the steel erector if there have been repairs, replacements or modifications of anchor bolts.

7.13 Beams and Columns

7.13.1 During the placement of structural steel members, loads shall not be released from the hoisting line until the members are properly secured with at least two bolts per connection of the same size and strength as shown on the steel erection drawings.

7.13.2 Bolts shall be wrench-tight or equivalent, as specified in the steel erection plan.

7.13.3 Additional bolts shall be installed as needed to ensure the stability of cantilevered members.

7.13.4 Diagonal bracing shall be secured by at least one bolt per connection, drawn up wrench-tight.

7.14 Double Connections at Columns and/or at Beam Webs

7.14.1 When two structural members on opposite sides of a column web or a beam web over a column are connected and share common connection holes, at least one bolt with its wrench-tight nut shall remain connected to the first member. However, a shop-attached or field-attached seat or equivalent connection device supplied with the member may be used to secure the first member and prevent the column from being displaced.

7.14.2 If a seat or equivalent connection device is used, the seat/device shall be designed to support the load during the double connection process. It shall be adequately bolted or welded to both a supporting member and the first

member before the nuts on the shared bolts are removed to make the double connection.

7.15 Perimeter Columns

7.15.1 Perimeter columns shall extend a minimum of 1.2 m (4 ft) above the finished floor to permit installation of perimeter safety cables prior to erection of the next tier, where possible.

7.15.2 Perimeter columns shall have holes or other devices attached to permit installation of perimeter safety cables. Height of the top holes or other devices shall be 1.07-1.14 m (3.5-3.75 ft) above the finished floor. Holes or other devices shall also be installed at the midpoint between the finished floor and the top cable.

7.16 Hoisting, Landing and Placing of Metal Decking

7.16.1 Bundle packaging and strapping shall not be used for hoisting, unless specifically designed for that purpose.

7.16.2 Loose items (e.g., dunnage, flashing, other materials) placed on the top of metal decking bundles to be hoisted shall be properly secured to the bundles.

7.16.3 Metal decking bundles shall be placed on joists so as to prevent tripping, falling object or overloading hazards.

7.16.4 Prior to landing bundles of metal decking on joists, all bridging shall be installed and anchored and all joist load-bearing ends shall be properly attached.

7.16.5 Metal decking bundles shall be placed on supporting framing members so that bundles can be unbanded without dislodging the bundles from the supports.

7.16.6 Metal decking shall be secured against displacement at the end of the shift or when required by environmental or job site conditions.

7.17 Holes and Openings

7.17.1 Metal decking shall be installed at roof and floor holes and openings as follows:

A. Framed metal deck openings shall have structural members turned down to allow continuous deck installation, except when not allowed by structural design constraints or constructability.

B. Roof and floor holes and openings shall be decked over.

C. When large sizes, configurations or other structural designs do not allow openings to be decked over (e.g., elevator shafts, stairwells), personnel

shall be kept from the edge of the opening by the use of warning lines at least 1.8 m (6 ft) from the edge.

D. Metal decking holes and openings shall not be cut until immediately prior to being permanently filled with the equipment or structure needed or intended to fulfill its specific use, or shall be immediately covered.

7.18 Covering Openings

7.18.1 Covers for roof and floor openings shall be capable of supporting, without failure, twice the weight of personnel, equipment and materials that may be on the cover at any given time.

7.18.2 Installed covers shall be secured to prevent displacement by wind, equipment or personnel.

7.18.3 Covers shall be marked with the words "WARNING: HOLE" or "WARNING: COVER" in high-visibility paint.

7.18.4 Installed smoke dome or skylight fixtures shall not be considered as covers, unless they meet the strength requirements of Section 7.13.1.

7.18.5 Where planks or metal decking around columns do not fit tightly, wire mesh, exterior plywood or equivalent material shall be installed and shall be of sufficient strength to provide fall protection for personnel and prevent objects from falling through.

7.19 Installation of Metal Decking and Grating

7.19.1 Metal decking and grating shall be tightly installed and immediately secured (i.e., fastened) upon placement.

7.19.2 Metal decking and grating panels shall be properly secured (i.e., fastened) to structural members to ensure full support.

7.19.3 A minimum of four fasteners per metal decking and grating panel shall be used.

7.20 Derrick Floors

7.20.1 Derrick floors shall be fully decked and/or planked.

7.20.2 Steel member connections shall be completed to support the intended floor loading.

7.20.3 Temporary loads placed on derrick floors shall be distributed to prevent point loading of the underlying support members.

7.21 Training

7.21.1 Fall protection training shall be provided for personnel exposed to fall hazards. The training shall include, but not be limited to, the following topics:

A. Fall hazard recognition and mitigation measures.

B. Use, operation and inspection of temporary guardrail systems (including perimeter safety cable systems), personal fall arrest systems, safety net systems and other fall protection to be used.

C. Procedures for erecting, maintaining, disassembling and inspecting temporary guardrail systems.

D. Procedures to prevent falls through holes and openings in walking/working surfaces and walls.

7.21.2 In addition to the fall hazard training required above, personnel engaged in the following activities shall be trained on how to properly perform the activity:

A. Multiple-lift rigging procedures, including:

- Hazards associated with multiple lifts.
- Multiple-lift procedures and equipment.

B. Connection procedures, including:

- Hazards associated with connecting.
- Proper connecting techniques and work practices.

C. CDZ procedures, including:

- CDZ hazards.
- Proper installation techniques and work practices.

7.21.3 Personnel shall maintain evidence of their completed training/certifications in their possession at all times (e.g., wallet card, safety passport).

8. Abrasive Blasting

8.1 Purpose

This chapter describes minimum safety requirements for abrasive blasting.

8.2 References

Saudi Aramco (SA) General Instructions (GIs):

GI 2.100, *Work Permit System*

GI 2.709, *Gas Testing Using Portable Gas Monitors*

GI 6.021, *Abrasive Blasting Operations*

GI 150.001, *Asbestos Hazard Management*

GI 1780.001, *Atmosphere-Supplying Respirators*

SA Engineering Standard (SAES)

SAES-H-102, *Safety Requirements for Coating Applications*

SA Engineering Procedure (SAEP):

SAEP-316, *Performance Qualification Requirements of Coating Personnel*

8.3 General Safety Requirements

8.3.1 Abrasive blasting activities shall be performed in accordance with GI 6.021.

8.3.2 In restricted areas, abrasive blasting shall be conducted in accordance with GI 2.100. Abrasive blasting is considered HOT WORK and gas tests shall be performed per GI 2.709 prior to initiating abrasive blasting operations.

8.3.3 All operators of abrasive blasting equipment shall be instructed and trained in the correct use and hazards associated with abrasive blasting equipment and abrasive materials (e.g., inhalation hazards of grit).

8.3.4 Abrasive blasting operators for industrial coating applications shall be tested and certified by a Certified Coatings Inspector (Level II) in accordance with SAEP-316.

8.3.5 Saudi Aramco supervisors shall contact the Occupational Medicine Section, Preventive Medicine Services Division, to arrange for a preplacement medical examination for their employees assigned to abrasive blasting operations, including a chest X-ray and a pulmonary

function study. These examinations shall be repeated at least every two years. Contractors shall establish equivalent biomonitoring programs (using non-Saudi Aramco medical facilities) for their employees who conduct abrasive blasting for Saudi Aramco.

8.3.6 Silica sand is an extremely hazardous abrasive material. The use of silica sand for abrasive blasting operations is prohibited at all SA facilities and SA project and construction sites. Safer alternative blasting agents are available and shall be used (e.g., aluminum oxide grit, fruit kernels, or synthetic abrasives).

8.3.7 Combustible abrasives (e.g., nut shells) capable of forming explosive mixtures with air shall not be used.

8.3.8 Air compressors supplying breathing air shall be inspected, tested, used, and maintained in accordance with Chapter III-2, *Mechanical and Heavy Equipment*.

8.3.9 Air compressors supplying breathing air shall be tested quarterly by an independent SA approved third-party testing facility to ensure that the air quality supplied by the compressor meets Compressed Gas Association Grade 'D' air quality requirements.

8.3.10 Breathing air compressors shall be properly placed to prevent contaminants from entering the compressor intake (e.g., upwind of any internal combustion engines).

8.3.11 Abrasive blasting operators shall wear an air-supplied hood, type "CE" supplied-air respirator, approved for abrasive blasting operations by the National Institute for Occupational Safety and Health (NIOSH) and the Mine Safety and Health Administration (MSHA). See Figure 8.1.



Figure 8.1 Abrasive Blasting Using Proper PPE

8.3.12 Abrasive blasting breathing air equipment shall include a NIOSH/MSHA (or equivalent organization) approved particulate filter for breathing air and water/oil traps before the filter in the breathing air delivery system to remove moisture, oil mist, and particulates. Continuous inline carbon monoxide (CO) monitoring with an audible alarm shall be provided for oil lubricated breathing air compressors, as the filter does not remove CO. See Figure 8.2.

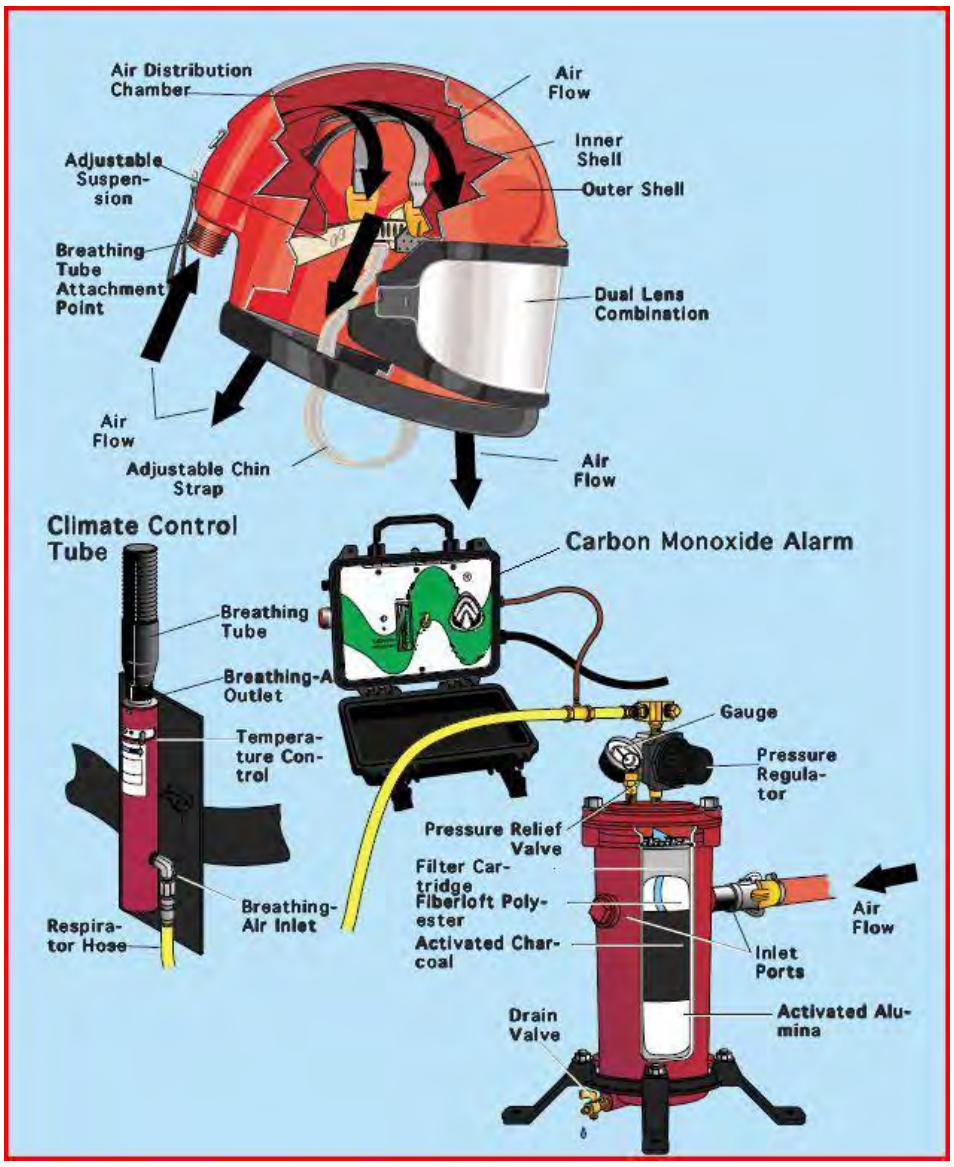

Figure 8.2 Abrasive Blasting Breathing Air Equipment

8.3.13 Breathing air filters shall be periodically checked and replaced as recommended by the manufacturer, but not less than every three months or sooner if objectionable odors become noticeable or if the filter begins to pass moisture. Water/oil traps shall be checked and drained daily.

8.3.14 Other workers in or near the work area shall wear a particulate respirator approved by NIOSH/MSHA (or equivalent organization) for the airborne contaminants likely to occur from abrasive blasting operations and handling of abrasive blasting media (i.e., grit).

8.3.15 Hearing protection shall be used by abrasive blasting operators and by all personnel in areas near abrasive blasting operations where noise levels exceed 85 decibels (dBA). See Chapter I-3, *Personal Protective Equipment (PPE)*.

8.3.16 Abrasive blasting operators shall wear other needed personal protective equipment (PPE), including leather or neoprene gloves, leather or neoprene apron, hearing protection, safety glasses, safety shoes, and coveralls. Other PPE may be required depending upon the work being performed. See Chapter I-3, *Personal Protective Equipment (PPE).*

8.3.17 Prior to abrasive blasting operations on any in-service, pressure-containing equipment (e.g., piping, tank, vessel), nondestructive testing or other methods shall be performed to determine that the equipment's wall thickness is adequate for abrasive blasting.

8.3.18 An abrasive blasting nozzle shall never be pointed at any person or part of the operator's body.

8.3.19 If the work includes removal or disturbance of asbestos-containing materials, all requirements in GI 150.001 shall be complied with.

8.4 Abrasive Blasting Equipment

8.4.1 An electrical bonding system that bonds nozzle, hose, blasting equipment (e.g., blast pot), and the material/equipment being cleaned shall be provided. The blast pot and material/equipment being cleaned shall be grounded to prevent a buildup of static electricity. Ground continuity tests shall be conducted by an electrician to ensure proper grounding (resistance of one megaohm or less).

8.4.2 Hoses and nozzle fittings shall be securely fixed to prevent unplanned disengagement during abrasive blasting operations. All twist-lock fittings ("Chicago" fittings) shall have a safety pin or wire installed to prevent disengagement. Hose connections shall be equipped with whip arrestors (whip checks) to restrain the hose in case of accidental disconnection.

8.4.3 Abrasive blasting equipment shall be equipped with a properly functioning constant pressure handle or control switch that will automatically shut off the flow of abrasive and propellant when the pressure is released (i.e., a "dead-man" switch). See Figure 8.3.



Figure 8.3 Dead-Man Switch

8.5 Abrasive Blasting the Exterior of Tanks/Vessels in Service

8.5.1 Tanks/vessels shall be considered in-service when they are pressurized or contain hydrocarbons, other flammable or combustible products, or if any inlet, outlet, or overhead piping connected to the tank is not blinded.

8.5.2 The precautions in GI 6.021 shall be followed when abrasive blasting the exterior of tanks/vessels that are in-service, including atmospheric storage tanks.

8.5.3 During abrasive blasting operations, tanks/vessels shall not be receiving or discharging product. An exception is floating roof tanks where abrasive blasting shall only be allowed on the tank's exterior below the wind girder. No abrasive blasting shall take place above the wind girder, on the roof, or interior wall of an in-service floating roof tank.

8.5.4 Additional requirements for abrasive blasting on cone roof tanks shall be implemented in accordance with GI 6.021.

9. Painting and Coating

9.1 Purpose

This chapter describes minimum safety requirements for spray painting and coating on Saudi Aramco (SA) property and work areas controlled by SA.

9.2 References

SA General Instructions (GIs):

GI 2.100, *Work Permit System*

GI 6.021, *Safety Requirements for Abrasive Blast Cleaning*

GI 150.100, *Hazardous Materials Communication (HAZCOM) Program*

GI 430.001, *Waste Management*

SA Engineering Standards (SAESs):

SAES-H-001, *Coating Selection and Application Requirements for Industrial Plants and Equipment*

SAES-H-002, *Internal and External Coatings for Steel Pipelines and Piping*

SAES-H-003, *Protective Coatings for Industrial Concrete Structures*

SAES-H-004, *Protective Coating Selection and Application Requirements for Offshore Structures and Facilities*

SAES-H-100, *Coating Materials and Application Requirements for Industrial Facilities*

SAES-H-101, *Approved Protective Coating Systems for Industrial Plants and Equipment*

SAES-H-102, *Safety Requirements for Coating Applications*

National Fire Protection Association (NFPA):

NFPA 30, *Flammable and Combustible Liquids Code*

9.3 Flammability Hazards of Coating Materials

9.3.1 Spray painting shall not be performed within 23 m (75 ft) of ignition sources (e.g., welding, flame cutting, smoking areas, electrical generators). Conditions at the work site may justify greater clearances.

9.3.2 Electrical lighting and power tools/equipment shall be explosion proof (e.g., labeled as meeting UL 844) where solvent vapors are likely to be present (e.g., mixing coating materials or paints that contain flammable solvents).

9.3.3 Electrical equipment (e.g., switches, panel boards, electrical motors and associated equipment) shall be de-energized before spray painting is applied to the equipment.

9.3.4 Solvents and solvent-based paints/coatings shall not be applied to surfaces hotter than 80 °C (176 °F).

9.3.5 Flammable paints and solvents shall be stored in accordance with Chapter I-7, *Fire Prevention*, of this manual.

9.3.6 Outside storage areas shall be kept free of weeds, debris and other combustible materials.

9.3.7 Fire extinguishers shall be available in the work area and be protected from overspray.

9.3.8 Work areas shall be cleaned after every shift, including removal of discarded paints, coatings and other materials. All paints, solvent cans, rags, etc., shall be disposed of in closed containers and/or lugger buckets specifically approved and designated for this purpose.

9.4 Health Hazards Associated With Coatings

9.4.1 Containers shall be labeled with the proper hazard communication (HAZCOM) label. Copies of the SA chemical hazard bulletin (CHB) and/or manufacturer's material safety data sheet (MSDS) shall be readily available on-site for all coatings, solvents and cleaning fluids being used. The safety precautions listed on the CHB/MSDS shall be followed. See Chapter I-10, *Hazardous Materials*, and GI 150.100.

9.4.2 Personnel performing spray painting or coating activities shall:

A. Be trained on the associated hazards as detailed by the CHB and/or MSDS for the products used.

B. Close/seal containers of coatings and related materials when not in use.

C. Be provided with and trained on the proper use of appropriate respiratory protection. Personnel applying spray paints/coatings shall wear organic vapor cartridge respirators or supplied air respirators depending upon the hazards of the paint/coating. See Chapter I-3, *Personal Protective Equipment (PPE)*, of this manual.

D. Wear other personnel protective equipment (PPE) required for the work being performed.

E. Inspect PPE prior to use and immediately report any defects/damage.

F. Adequately ventilate painting/coating areas.

G. Use ventilation controls and/or organic vapor respirators when working with paint removers/strippers containing toxic solvents.

H. Dispose of coating residue in accordance with GI 430.001.

I. Wash thoroughly before eating and at the end of each shift.

J. Immediately remove clothing that becomes contaminated with solvents to prevent chemical burns. Contaminated clothing shall be discarded in closed containers or cleaned as soon as possible, since solvents will continue to vaporize and can present a spontaneous combustion fire hazard.

9.5 Surface and Work Site Preparation

9.5.1 Personnel performing surface preparation activities shall be properly trained on the associated hazards as detailed by the CHB or MSDS for the cleaning materials used.

9.5.2 Surfaces, other than those being prepared, shall be protected from damage.

9.5.3 Safe and level work surfaces/platforms shall be provided for personnel performing surface preparation (e.g., abrasive blasting) and painting/coating activities.

9.5.4 Dust and overspray control measures shall be provided at the work site to minimize impact on adjacent areas (e.g., sheeting around abrasive blasting operations).

9.5.5 Mechanical ventilation shall be provided when personnel are working in confined spaces. See Chapter I-6, *Confined Spaces*, for additional confined space requirements.

9.5.6 Eye and body wash facilities shall be available in the immediate work area when using chemical solvents/cleaners. For any portable wash facilities provided, water pressure shall be adequate and water reservoir flushed and refilled regularly as recommended by the manufacturer.

9.5.7 Benzene, gasoline, carbon tetrachloride and chlorinated hydrocarbons shall not be used for cleaning purposes.

9.5.8 Airless spray equipment (e.g., used for applying chemical cleaners) shall be properly grounded before use.

9.5.9 Abrasive blasting equipment shall be properly bonded and grounded to prevent a buildup of static electricity. See GI 6.021 and Chapter II-8, *Abrasive Blasting*, for additional abrasive blasting requirements.

9.5.10 Power tools used in surface preparation shall meet the requirements of Chapter I-11, *Hand Tools and Power Tools*.

9.6 Painting/Coating Applications

9.6.1 Work permits shall be per GI 2.100 when spray painting or applying coatings within a SA restricted area.

9.6.2 Personnel shall operate and de-energize pressurized painting/coating equipment in accordance with the manufacturer's recommendations.

9.6.3 Spray or airless painting work areas shall be barricaded to prevent entry by unauthorized personnel. Warning signs shall be posted in hazardous areas (e.g., “No entry, spray painting/coating in progress”).

9.6.4 Precautions shall be implemented during spray painting activities to protect personnel outside the work area from being exposed to hazardous materials and vapors.

9.6.5 The quantity of paints and solvents stored at the job site shall be limited to the amount required for one day’s usage. Bulk storage of paints and solvents shall be located in designated, well-marked safe areas and protected from the sun.

9.6.6 The size of portable containers (e.g., paint cans/containers) shall not exceed 19 L (5 gal) for flammable or combustible liquids.

9.6.7 The size of metal drums used to store flammable liquids shall not exceed 227 L (60 gal).

9.6.8 Spray guns or nozzles shall not be pointed at personnel or any part of the user’s body.

9.6.9 Spray painting activities shall be performed upwind of the object being coated, whenever practical.

9.6.10 Chemical cleaning agents, such as solvents, shall not be used for personal cleaning of hands, arms, etc.

9.7 Tarring Operations

9.7.1 Heating of tar shall not be performed on roof tops or in similar potentially unsafe locations. Heating of tar shall be performed at ground level.

9.7.2 Tar heating operations shall be performed using approved fuel gas in approved cylinders.

9.7.3 Transferring hot tar shall be performed using the safest mode of transport available, preferably pumped. Hot tar shall not be lifted to elevations (e.g., roofs) in buckets.

9.7.4 Hot tar operations shall require the following minimum PPE: safety shoes, safety glasses, hard hats, face shields, leather gloves, coveralls and heat-resistant aprons. Respiratory protection may be required in confined spaces.

10. Cutting, Welding and Brazing

10.1 Purpose

This chapter describes minimum safety and health precautions to be taken during gas welding, cutting, brazing and electric arc welding operations.

10.2 References

Saudi Aramco (SA) General Instructions (GIs):

GI 2.100, *Work Permit System*

GI 2.709, *Gas Testing Procedure*

SA Safety Handbook, *Minimum Safety Rules*

American National Standards Institute (ANSI)/American Welding Society (AWS):

ANSI/AWS Z49.1, *Safety in Welding, Cutting and Allied Processes*

American National Standards Institute (ANSI)/International Safety Equipment Association (ISEA)

ANSI/ISEA Z87.1, *Occupational and Educational Personal Eye and Face Protection Devices*

American Conference of Governmental Industrial Hygienists (ACGIH):

Threshold Limit Values

U.S. Code of Federal Regulations (CFR):

29 CFR 1926, Subpart J, *Welding and Cutting*

10.3 General Requirements

10.3.1 All welders and brazers shall be SA certified for the materials and types of welding or brazing being performed and, when requested, shall present their valid certificates.

10.3.2 Combustible material around the work area shall be removed and/or protected against sparks, slag or heat using fireproof material or by wetting if appropriate. This includes combustible material below an elevated welding or cutting work area.

10.3.3 Hot work permit(s) shall be obtained prior to burning, welding and brazing in a restricted area per GI 2.100. See Chapter I-4, *Work Permit System*, of this manual.

10.3.4 Fire extinguisher(s) shall be readily available near the hot work area.

10.3.5 A qualified fire watch shall be assigned to any cutting, welding or burning operation. The fire watch shall remain in the work area during these activities and for no less than 30 minutes after the hot work has finished.

10.3.6 Within hydrocarbon facilities, all sewers within 23 m (75 ft) shall be covered prior to hot work per GI 2.100.

10.3.7 Cutting, welding and brazing shall not be allowed in oxygen-enriched environments (i.e., an oxygen concentration greater than 23.5%).

10.3.8 The surface to be cut, welded or brazed shall be cleaned and all hydrocarbons removed before commencing work.

10.3.9 Before welding, cutting or heating a surface covered with a coating whose flammability is not known, a test shall be performed to determine its flammability. When coatings are determined to be flammable, they shall be stripped from the area where work will occur to prevent ignition.

10.3.10 Cutting, welding or brazing shall not be performed on a drum or container without first identifying the contents of the drum/container and ensuring any remaining contents (including residue) cannot ignite or explode. Drums or containers that previous contained a flammable or toxic material shall be opened using cold cutting and thoroughly cleaned and gas tested before cutting/welding/brazing.

10.3.11 Cutting, welding and brazing equipment shall be turned off and compressed gas cylinder valves closed when not in use.

10.3.12 Cutting, welding and brazing operations shall be conducted in well-ventilated areas. See Section 10.8.

10.3.13 All cutting, welding and brazing equipment (including cylinders, hoses, cables) shall be visually inspected by the user prior to use and regularly maintained.

10.3.14 Equipment with defects or damage (e.g., cracked hoses, cylinders with dents or broken regulator gauges) shall be immediately taken out of service for repair or removed from the job site and replaced.

10.3.15 Compressed gas cylinders shall be properly labeled, capped when not in use, transported, handled, used and stored in accordance with Chapter I-9, *Compressed Gas Cylinders*.

10.3.16 Compressed gas cylinders shall not be placed where they can become part of an electrical circuit (e.g., electrodes shall not come in contact with a cylinder).

10.3.17 Compressed gas cylinders shall not be placed adjacent to the actual welding or cutting operations so that sparks, slag or flame could reach them. If necessary, fire resistant shields shall be used.

Protective Equipment (PPE)

10.4.1 Personnel involved in cutting, welding or brazing operations, including helpers, shall use proper PPE. Respiratory protection equipment shall be provided and used as needed. See Chapter I-3, *Personal Protective Equipment (PPE)*.

10.4.2 Leather gloves and leather body protection shall be worn for protection against heat, sparks, flying metal particles and radiation. Gloves shall protect wrists and forearms.

10.4.3 Safety boots and leggings shall be worn as needed to provide protection against heat, sparks and flying metal particles. Pants shall not be worn inside (i.e., tucked in) safety boots.

10.4.4 A welding helmet shall be worn during welding operations to protect the welder's eyes and face against the intense radiation (light/heat), flying particles, etc. A welding helmet or welding goggles (eyecup or coverspec type) shall be worn by personnel performing cutting and brazing operations.

10.4.5 Protective lenses for welding helmets and goggles shall be shaded tempered glass or shatter-resistant material (e.g., polycarbonate) and shall be marked to identify the shade number of the lens. The appropriate shade number for the work being performed shall be used for protection from injurious light radiation (see Tables 10.1 and 10.2).

Protective Lens Shade Numbers
Fuel Cutting

Oxygen-Fuel Cutting	Plate Thickness (inches)	Plate Thickness (mm)	Minimum (*) Protective Shade #
Light	Under 1	Under 25	3
Medium	1 to 6	25 to 150	4
Heavy	Over 6	Over 150	5

Shade Numbers

Operation	Electrode Size 1/32 in.	Arc Current (amps)	Minimum (*) Protective Shade #
Shielded metal arc welding	Less than 3 3-5 5-8 More than 8	Less than 60 60-160 160-250 250-550	7 8 10 11
Gas metal arc welding and flux cored arc welding		Less than 60 60-160 160-250 250-500	7 10 10 10
Gas tungsten arc welding		Less than 50 50-150 150-500 500-1000	8 8 10 10
Arc cutting (gouging)			
Plasma arc welding		Less than 20 20-100 100-400 400-800	6 8 10 11
Plasma arc cutting		Less than 300 300-400 400-800	8 9 10
Torch brazing			3
Torch soldering			2
Carbon arc welding			14

Note (*) - As a general practice, start with a shade that is too dark to see the weld/cut zone. Then go to a lighter shade which gives sufficient view of the weld zone without going below the minimum.

Welding and Cutting

10.5.1 Cylinders, cylinder caps and valves, regulators, hoses and fittings shall be kept free of grit, dirt, grease and oil.

10.5.2 All cylinder valves shall be closed whenever the equipment is unattended.

10.5.3 Cylinders shall be fitted with correct pressure regulators. Regular checks shall be made to ensure that the regulators are working properly.

10.5.4 When “cracking” the cylinder valve (i.e., clearing the valve of dust or dirt prior to connecting the regulator), personnel shall stand to one side of the valve/regulator outlet, not in front of it. Gas cylinders shall not be “cracked” near welding or cutting operations, hot surfaces or other sources of ignition.

10.5.5 Flashback arrestors shall be installed on all oxygen/fuel cylinder regulators. See Figure 10.1.



Figure 10.1 Flashback Arrester Installation

10.5.6 Check valves shall be installed at the end of hoses near the torch.

10.5.7 Oxygen cylinders shall not be handled with oily hands or gloves.

10.5.8 Oxygen shall never be permitted to come in contact with oily surfaces, greasy clothes or introduced into a fuel oil or other storage tank.

10.5.9 Cylinders, valves, regulators, gauges, fittings and hoses shall be inspected for damage and leaks (e.g., soapy water) prior to use. Defective equipment shall not be used.

10.5.10 Any cylinder that exhibits a leaking cylinder valve, valve stem, fuse plug or other safety device shall be immediately removed from the work area, tagged and moved to a safe area. It shall be returned to the supplier when safe to do so.

10.5.11 Suitable cylinder hand trucks (bottle carts), chains or other steadying devices shall be used to keep cylinders upright and from being knocked over.

10.5.12 Cylinders shall be transported, stored, handled and used in the vertical position.

10.5.13 A handle or valve wrench shall be in place at all times while an acetylene cylinder is in use.

10.5.14 Fuel gas hoses and oxygen hoses shall have different colors for identification. Hoses and fittings shall be used for only one type of gas (i.e., shall not be interchanged).

10.5.15 Hose connections shall be made by compression clips or crimps. Use of jubilee clips/worm-drive hose clamps (see photo) is prohibited.

10.5.16 The torch nozzle shall be kept closed when not in use. Lighted torches shall not be left unattended.

10.5.17 Means of torch ignition shall be readily available. A friction lighter (striker) shall be used for this purpose. Matches or cigarette lighters shall not be used to light a torch.



10.5.18 Hoses shall be protected from potential damage during operations.

10.5.19 Gas cylinders shall be turned off and hoses bled off at the end of each shift or task.

10.5.20 Fuel gas and oxygen manifolds

A. Fuel gas and oxygen manifolds shall have the name of the substance they contain painted on each manifold or on a sign permanently attached to it.

B. Fuel gas and oxygen manifolds shall be located in a safe, well-ventilated and accessible location. See Figure 10.2. Manifolds shall not be located in confined spaces.

C. Manifold hose connections, including supply hose connections, shall be such that hoses cannot be interchanged between fuel gas and oxygen manifolds.

D. When not in use, manifold and header hose connections shall be capped.



Figure 10.2 Gas Cylinder Manifold Installation

10.6 Electric Arc Welding/Cutting

10.6.1 Direct current (DC) shall be used for welding/cutting operations in any situation when the effect of electric shock is likely to be extreme, such as in damp and confined spaces (tanks, boilers, etc.).

10.6.2 Electrical outlets on welding machines shall be rated for 125 volts maximum and be equipped with ground fault circuit interrupters (GFCIs). If welding machines are equipped with 220 volt electrical outlets, these outlets shall be disabled.

10.6.3 Manual electrode holders shall be specifically designed for arc welding and have a capacity capable of handling the maximum rated current required by the electrodes.

10.6.4 Any current-carrying parts of the electrode holder which welders have in their hands (and the outer surfaces of the jaws of the electrode holder) shall be fully insulated to protect against the maximum voltage to ground.

10.6.5 Electrode holders shall be constructed to accommodate all sizes of electrodes.

10.6.6 Welding connections

A. The frames of all electrical arc welding machines shall be properly grounded (i.e., either through a third wire in the cable containing the circuit conductor or through a separate wire which is grounded at the source of the current).

B. Ground returns shall be securely attached by cable lugs, clamps or bolts to the material being welded upon.

C. Ground returns shall be connected as close as possible (e.g., 1 to 4 meters) to the location being welded upon to avoid stray currents.

D. Ground returns shall not be connected to piping containing flammable gases or liquids or conduits containing electrical circuits.

E. When the structure or nonhazardous piping being welded is used as a ground return circuit, it shall be ensured that electrical conductivity to ground exists in the structure or piping (e.g., joints shall be bonded as needed to ensure conductivity).

F. Splices are not allowed anywhere in welding cables.

G. Welding cables (welding leads) shall be continuous (i.e., free from repair/joints) for a minimum distance of 3 m (10 ft) from the end to which the electrode holder is connected.

H. If a welding cable becomes damaged beyond a distance of 3 m (10 ft) from the end to which the electrode holder is connected, it shall be repaired using a standard plug-and-socket coupling.

I. Welding cables shall be regularly inspected for cuts or abrasions to the insulation. Damaged cables shall be removed from service. Temporary repairs (including repairing damaged welding cable insulation with electrical tape) are prohibited.

J. When feasible, welding cables shall be elevated or protected by nonconductive cable covers.

10.6.7 Noncombustible or flameproof welding screens shall be used to protect nearby personnel and equipment from exposure to arc welding/cutting hazards.

10.6.8 When the material to be welded or cut is supported by a crane, the welding/cutting shall not occur near the rigging or a shield/screen shall be provided to protect the rigging. In such situations, the rigging shall be nonconductive and outside the heat affected zone.

10.6.9 Welders shall remove the electrode from the electrode holder when welding operations are discontinued for any period of time. Electrode holders shall be unplugged when not in use.

10.7 Welding and Cutting inside Confined Spaces

10.7.1 Confined space entry shall be per GI 2.100 and Chapter I-6, *Confined Spaces*.

10.7.2 Gas testing per GI 2.709 and Chapter I-6, *Confined Spaces*, shall be conducted to ensure that the atmosphere inside the confined space meets the requirements for entry and subsequent work activities.

10.7.3 Compressed gas cylinders shall not be placed inside confined spaces. See Chapter I-9, *Compressed Gas Cylinders*.

10.7.4 The previous contents of a tank or vessel shall be identified. If the tank/vessel is known or suspected to have contained flammable or combustible materials prior to entry, the space shall be cleaned, purged and gas tested prior to performing welding or cutting operations.

10.7.5 The use of oxygen for purging or cleaning out containers, vessels or tanks is prohibited.

10.7.6 When work in a confined space is to be performed over several days, the hoses and equipment (e.g., torch) shall be taken outside the confined space when not being used (e.g., long break periods, overnight).

10.8 Health Hazards

10.8.1 Airborne contaminants generated by welding in shops, tanks or other poorly ventilated areas shall be maintained at safe levels (i.e., not in excess of the ACGIH Threshold Limit Values) by use of local exhaust ventilation and/or general mechanical ventilation. See Figures 10.3 and 10.4.

10.8.2 General mechanical ventilation and/or local exhaust ventilation shall be used when welding, cutting or heating the following materials in any enclosed space:

- Zinc-bearing base or filler metals or metals coated with zinc-bearing materials.
- Lead base metals.
- Cadmium-bearing filler materials.
- Chromium-bearing base or filler metals or metals coated with chromium-bearing materials.

10.8.3 Local exhaust ventilation or air line respirators shall be used when welding, cutting or heating the following materials in an enclosed space:

- Metals containing lead or metals coated with lead-bearing materials.
- Cadmium-bearing or cadmium coated base metals.
- Metals coated with mercury-bearing metals.

10.8.4 Work involving beryllium shall be performed with both local exhaust ventilation and air line respirators shall be worn.

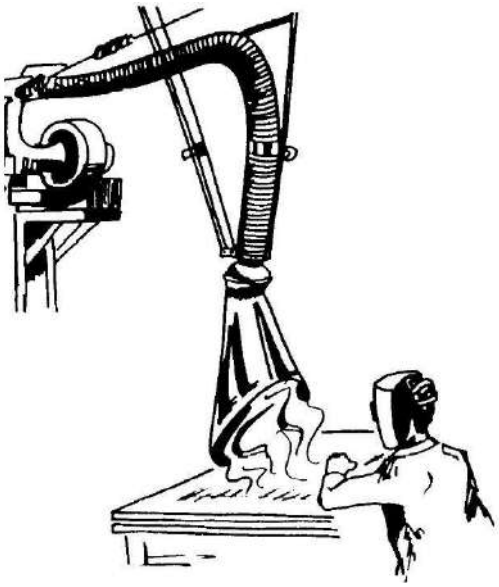

Figure 10.3 Local Exhaust Ventilation

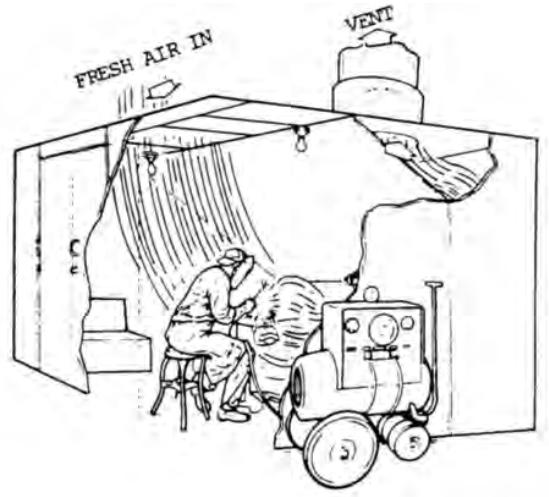

Figure 10.4 General Mechanical Ventilation

11. Road works

11.1 Purpose

This chapter describes minimum safety requirements for construction and repair of roadways for Saudi Aramco (SA) projects, facilities and communities.

11.2 References

SA General Instructions (GIs):

GI 2.100, *Work Permit System*

GI 1021.000, *Street and Road Closure: Excavation, Reinstatement and Traffic Controls*

Saudi Arabian Government Ministry of Communications

Manual on Uniform Traffic Control Devices

11.3 General Requirements

11.3.1 Traffic control barriers, lights, etc., shall conform to the Ministry of Communications' *Manual on Uniform Traffic Control Devices*.

11.3.2 Hazard warning devices shall be installed prior to the start of roadwork and shall be promptly removed when roadwork is complete (See GI 1021.000 for more information).

11.3.3 Placement of traffic control and construction signs along the work area shall be in accordance with GI 1021.00 requirements.

11.3.4 Spacing of traffic control and construction signs shall be adjusted to fit community or facility street systems.

11.3.5 Traffic control and construction signs shall be maintained in a clean and legible condition.

11.3.6 Traffic control and construction signs shall be made of reflective sheeting.

11.3.7 Activities that produce dust shall be kept to a minimum. If dust cannot be avoided and presents a hazard to traffic or nuisance to nearby facilities or residences, effective dust control measures (e.g., wetting of top soil) shall be implemented.

11.3.8 Excavations shall be barricaded or otherwise protected to ensure the safety of pedestrians. Excavations shall be shored as necessary to prevent sidewall cave-ins, especially from nearby traffic. See Chapter II-1, *Excavations and Shoring*, of this manual for additional information.

11.3.9 Flagmen shall be posted at entrance and exit barricades, equipped with high-visibility (e.g., reflective) vests, reflective “stop” and “go” signs or flags, and/or radio communications.

11.3.10 Entrance and exit flagmen shall be within sight of each other. If conditions do not permit this, additional flagmen shall be positioned, if safe to do so, where they can see and be seen by the other flagmen in order to safely control traffic through the roadwork area.

11.3.11 Excavations and detours for roadways/streets shall be in accordance with GI 1021.000.

11.3.12 Roadwork areas shall be illuminated at night.

11.3.13 Flagmen shall wear high-visibility (e.g., reflective) vests and gloves at night. They shall be stationed in illuminated areas and use reflective signs or flags.

11.3.14 Surfaces of highways, streets and/or sidewalks shall be level and in good condition prior to removal of barricades and markers.

11.3.15 Permanent road signs and striping shall be restored before the roadway is returned to service.

11.3.16 Upon completion of roadwork, all excess materials, spoils, debris and traffic control signs shall be immediately removed from the area.

12. Piling Operations and Cofferdams

12.1 Purpose

This chapter describes minimum requirements for safely conducting piling operations and building cofferdams, including driving both load-bearing piles and sheet piles.

12.2 References

Saudi Aramco (SA) General Instructions (GIs):

GI 2.100, *Work Permit System*

GI 7.025, *Heavy Equipment Operator Testing and Certification*

GI 7.030, *Inspection and Testing Requirements for Elevating/Lifting Equipment*

American National Standards Institute (ANSI)/American Society of Safety Engineers (ASSE):

ANSI/ASSE A10.19, *Safety Requirements for Pile Installation and Extraction Operations*

U.S. Code of Federal Regulations (CFR):

29 CFR 1926.603, *Pile Driving Equipment*

29 CFR 1926.802, *Cofferdams*

12.3 General Requirements

12.3.1 Crane operators shall have a valid Saudi Arabian Government (SAG) heavy equipment license and a valid SA certificate per GI 7.025.

12.3.2 Work permits per GI 2.100 shall be issued when conducting piling operations. See Chapter I-4, *Work Permit System*, of this manual.

12.3.3 Overhead and underground utilities shall be properly located and marked prior to start of work.

12.3.4 Personnel handling piles or working on piling operations shall wear hard hats, safety shoes, safety glasses, stout gloves and be equipped with suitable ear protection to protect against the actual noise levels they will be exposed to. See Chapter I-3, *Personal Protective Equipment (PPE)*.

12.3.5 Steam/air hoses leading to the hammer or jet pipe shall be securely attached to the hammer with a 6 mm (1/4 inch) chain or cable to prevent whipping in the event a joint at the hammer breaks.

12.3.6 A properly rated safety chain/cable or equivalent means shall be provided for other hose connections to prevent whipping in case the coupling becomes disconnected.

12.3.7 Piling operations shall be supervised at all times. The crew shall be properly trained in piling operations.

12.3.8 Guys, outriggers or counterbalances shall be used as necessary to maintain stability of the pile driving rig.

12.3.9 The ram shall be blocked, residual air or steam pressure relieved and lines disconnected before maintenance work begins on the hammer.

12.4 Before Work Starts

12.4.1 Before work begins, a piling operations plan shall be developed that includes, but is not limited to:

A. The scope and purpose of the piling operation.

B. Soil analysis reports of the area.

C. The precise location and nature of any overhead and underground utilities or other obstructions in the area.

D. Pile driving methods and safety precautions to be used.

12.4.2 Pile driving equipment shall be verified to be of adequate capacity to perform the operation.

12.4.3 An inspection shall be performed and repairs made as necessary before pile driving equipment is used.

12.5 Cranes

12.5.1 When cranes are to be used for driving piles with a drop hammer or driving piles below the level of the crane using extended leaders, the distance of the hammer from the center point of the crane shall be determined and this distance used to calculate the crane's safe working load.

12.5.2 Outriggers shall be used to maintain stability of the crane. See Chapter III-7, *Cranes and Lifting Equipment*, for additional requirements.

12.6 Ground Support

12.6.1 The ground supporting a crane or pile driving rig shall be firm and level.

12.6.2 Digger mats or hard-core standing shall be provided if the ground could sink or collapse.

12.7 Pile Gates

12.7.1 Sufficient timber or steel shall be used for the construction of pile gates.

12.7.2 Pile gates shall have proper ladder access. When pile gates are 1.8 m (6 ft) or higher, sufficient handrails or full-body harnesses with lanyards shall be used. See Chapter II-5, *Fall Protection*.

12.8 Equipment Inspection

12.8.1 Pile driving and associated equipment used on-site shall be inspected before work starts each day and per GI 7.030.

12.8.2 Air compressors or steam boilers shall be inspected and all hoses/couplings checked for leaks and general condition.

12.8.3 Steam and air hoses shall be inspected to ensure they are properly fitted with regulator valves and quick acting shut-off valves for emergencies.

12.8.4 Hammers and extractors shall be inspected (e.g., for loose bolts) at the beginning of each shift.

12.8.5 Equipment inspection records shall be maintained.

12.9 Timber Blocks

12.9.1 Stop blocks shall be provided for the leads to prevent the hammer from being raised against the head block.

12.9.2 Guards shall be provided across the top of the head block to prevent the cable from coming out of the sheaves.

12.9.3 Fixed leads shall be provided with ladder and adequate attachment points (e.g., rings) so that the loft workers may engage their lanyards to the leads. Loft platforms shall be protected with standard guardrails.

12.10 Driving Piles

12.10.1 Pitching

A. Piles shall only be lifted and positioned in the pile gate, or onto the leaders or rig, with sound lifting gear adequate for the purpose.

B. Quick release shackles shall be inspected before each use.

C. When hollow sections or concrete piles are lifted with chains or wire slings, timber or burlap packing shall be placed between the lifting gear and the pile.

D. Hardwood wedges shall be used for adjusting piles while pitching. Softwood wedges shall not be used.

E. Adequate access, such as a cradle or a properly secured ladder, shall be provided for the top man when pitching sheet piles. The top man shall wear stout gloves when pitching.

12.10.2 Pile Driving

A. Personnel shall be kept away while pile driving is in progress.

B. The emergency shut-off valve and the crane or winch controls shall be manned at all times during pile driving.

C. A supervisor shall be present and be positioned so that they can be seen by both the crane (or winch) operator and the operator manning the emergency shut-off valve.

D. A hand signal system shall be used between the supervisor, winch/crane operator and valve operator, so that emergency shutdown does not depend on verbal communication.

E. Piles, leaders and machines shall be aligned when driving raking piles.

F. Hammers shall not be touched until valves are closed and the system is depressurized.

G. Operators shall take precautions to ensure that hammer exhaust and earth vibration are not a threat to the surrounding area.

H. If the head of a pile becomes distorted through driving, no attempt shall be made to clear it from the leaders by lifting or booming up. The pile head shall be cut off and the debris cleared from the leaders.

12.11 Pile Extraction

12.11.1 Hammer-driven piles shall not be extracted by lifting or booming up with a crane. Steam, air or electric operated extractors shall be used.

12.11.2 Extractor wedges shall be inspected for good condition and replaced when worn.

12.11.3 Personnel shall not walk under suspended piles.

12.12 Cofferdams

12.12.1 Cofferdams shall:

A. Be strong enough to withstand forces caused by water, soil conditions and floating debris.

B. Be as watertight as possible, although some leakage is expected and may require pumping.

12.12.2 Steel sheet piling used for cofferdams shall be driven to the design specifications (e.g., specified depth).

12.12.3 Cofferdams in excess of 1.2 m (4 ft) in depth shall be designed by a degreed structural engineer. This includes horizontal wales and struts used for bracing for sheet piling.

12.12.4 Deviations from the design during the actual construction of the cofferdam shall be approved by the design engineer.

12.12.5 Sump pumps, equipment and machinery shall be mounted on a cantilevered platform outside the cofferdam.

12.12.6 Internal supporting structures shall be secured against unintentional dislodgment.

12.12.7 Emergency evacuation warning signals shall be provided and related procedures developed. Notices shall be posted at the entrance to the work area as well.

12.12.8 Locking devices on wedges shall be used to prevent their unintentional removal and possible collapse of the structure.

12.12.9 Before Work Begins

A. Cofferdams constructed in a navigable waterway or which would constitute an obstruction or hazard to the operation of small boats shall be approved in advance by the manager of the SA Marine Department.

B. The proponent manager of the intended project/construction shall be responsible for coordinating approval with the required SAG agencies through SA Affairs.

12.12.10 Cofferdam Construction

A. Cofferdam construction work shall be performed in strict compliance with the design drawings and specifications.

B. Construction shall be performed by properly trained craftsmen in accordance with accepted work practices.

C. Cofferdam walkways, ramps or bridges shall have at least two exit points. These shall be provided with standard guardrails.

D. Enclosed cofferdam structures shall be provided with a means of emergency exit for personnel performing work inside the structures.

E. Unexpected soil or hydrographic conditions encountered during construction shall be reported immediately to the design engineer for evaluation and possible modification of the structure.

F. Actions shall be taken to control flooding of the work area if overtopping of the cofferdam by high waters is possible.

G. Significant leaks shall be reported immediately to the person in charge of the operations.

H. Personnel shall immediately evacuate the area when a large leak cannot be sealed or if there is an indication that the piling has moved. The design engineer shall be immediately notified of these conditions.

12.12.11 Cofferdam Inspections

A. Inspections shall be performed daily or after any weather condition or incident which might affect the integrity of the cofferdam.

B. Wedges shall be inspected at the start of each shift.

C. Sump pumps and intake fastenings shall be inspected at the start of each shift.

13. Explosive Materials

For in-Kingdom blasting operations, contact the Saudi Aramco (SA) Project Management Office Department, Project Execution Support Division, Blasting Services Group for specific requirements related to the use, transportation, storage and handling of explosive materials.

13.1 References

SA General Instructions (GIs):

GI 2.100, *Work Permit System*

GI 475.001, *Blasting Near Existing Facilities*

GI 610.001, *Special Regulations for the Use of Explosives in Seismic Operations*

GI 1310.000, *Transportation of Dangerous Goods Onboard Saudi Aramco Aircraft*

SA Transportation Department Operations Manual

Section 21, *Transporting Explosives in Company Owned/ Leased/Rented Motor Transport Vehicles*

SA Supply Chain Management Manual

Handling and Controlling of Explosives (CU 22.04, PD 22.04, ML 22.04, SO 22.04, MP 22.04, OK 22.04)

Blasting Services Manual, Project Management Office Department

American National Standards Institute (ANSI)/American Society of Safety Engineers (ASSE):

ANSI/ASSE A10.7, *Commercial Explosives and Blasting Agents – Safety Requirements for Transportation, Storage, Handling and Use*

14. Demolition

14.1 Purpose

This chapter describes minimum safety requirements for conducting demolition activities at Saudi Aramco (SA) operating facilities and office/residential structures.

14.2 References

SA General Instructions (GIs):

GI 2.100, *Work Permit System*

GI 2.709, *Gas Testing Procedure*

GI 6.012, *Isolation, Lockout and Use of Hold Tags*

GI 8.001, *Safety Requirements for Scaffolds*

GI 150.001, *Asbestos Hazard Management*

American National Standards Institute (ANSI)/American Society of Safety Engineers (ASSE):

ANSI/ASSE A10.6, *Safety Requirements for Demolition Operations*

ANSI/ASSE Z117.1, *Safety Requirements for Confined Spaces*

14.3 Before Work Starts

14.3.1 All asbestos-containing material or suspected material shall be identified and handled with strict adherence to GI 150.001.

14.3.2 All utility services, such as electricity, gas, water and fire protection systems, shall be isolated and properly locked and tagged per GI 6.012 prior to demolition work. The utility services' main supply shall be disconnected outside the boundary of the demolition work. Tanks and vessels shall be completely disconnected from inlet, outlet and overflow points.

14.3.3 It shall be determined if any type of hazardous chemicals, gases, explosives, flammable materials, or similarly dangerous substances have been used in any pipes, tanks, or other equipment on the property. When the presence of any such substances is apparent or suspected, testing and purging shall be performed and the hazard eliminated before demolition is started.

14.3.4 Prior to demolition of a multistory building, an engineering survey shall be made, by a degreed structural engineer, of the structure to determine the condition of the framing, floors and walls, and possibility of unplanned

collapse of any portion of the building. Any adjacent structure where personnel may be exposed shall also be similarly checked. The demolition crew shall have in writing evidence that such a survey has been performed.

14.3.5 Adjacent structures, public buildings, pedestrian walkways, parking lots, etc., shall be protected from potential demolition debris. Bracing shall be installed, where needed, to ensure stability of adjacent structures.

14.3.6 Work permits shall be per GI 2.100.

14.3.7 Barricades shall be erected around the demolition work area. Signs with the words "Danger - Demolition in Progress" in Arabic and English shall be erected at each approach to the demolition area.

14.4 Stability During Demolition

14.4.1 Frequent inspections shall be performed during demolition activities to identify hazards that may develop from weakened or overloaded floors, unsupported walls, loose material, etc. Steps shall be immediately taken to prevent premature collapse of any part of the structure. Personnel shall not be permitted to work where such hazards exist until they are corrected by shoring, bracing or other effective means.

14.4.2 Masonry, concrete and other debris shall not be permitted to fall upon a floor so as to exceed the safe load capacity of the floor.

14.4.3 Lateral supports shall not be removed from more than one story of wall before starting to demolish it. When a wall from which supports have been removed is left standing, including during overnight and off-work hours, adequate bracing shall be provided to prevent collapse and protect against wind loads.

14.4.4 Structural or load-supporting members on any floor shall not be cut or removed until all stories above it have been completely demolished and removed.

14.4.5 Personnel shall not be permitted to work on top of a roof, wall, etc., when weather conditions could create a hazardous environment.

14.5 Work Area Clearance

14.5.1 Access/Egress

A. A safe means of access and egress from all work areas shall be provided. Work areas, ladders, stairways and walkways shall be kept clear of material and debris.

B. Floor openings within 3 m (10 ft) of any wall being demolished shall be planked solid, except when personnel are prevented from accessing the area below the opening by use of barricades, signs, etc.

14.5.2 Nails in timber shall be removed or bent over.

14.5.3 Glass in windows, doors, partitions, etc., shall be completely removed prior to structural demolition.

14.6 Structural Steel Removal

14.6.1 A demolition procedure for steel structures (e.g., storage tanks, silos, towers, pipe racks) shall be developed and submitted to the SA proponent organization (SAPO) for review prior to demolition.

14.6.2 Steel frame construction shall be demolished column length by column length and tier by tier.

14.6.3 Any structural steel member being removed shall not be under any stress other than its own weight.

14.6.4 Steel members shall be chained or lashed in place prior to cutting or dismantling to prevent uncontrolled swinging or dropping.

14.7 Tanks, Vessels and Piping

14.7.1 Vessels, tanks, pipes, etc., that may have contained hydrocarbons or other toxic/flammable materials shall be isolated, flushed, and ventilated to remove residual materials. Subsequent gas tests shall be conducted and work permits issued per GIs 2.709 and 2.100 prior to burning or cutting. The lower explosive limit (LEL) shall be 0% LEL before the Hot Work Permit can be issued.

14.7.2 The use of cold cutting techniques for dismantling tanks, vessels and piping requires a Cold Work Permit per GI 2.100.

14.8 Protective Clothing and Equipment

14.8.1 The following minimum personal protective equipment (PPE) for demolition workers shall be provided:

A. Hard hat.

B. Safety glasses/goggles.

C. Heavy-duty gloves.

D. Safety boots with steel toe caps and preferably with penetrant-resistant soles.

E. Appropriate respiratory equipment (as necessary to prevent inhalation of dust and/or particulates).

14.8.2 Additional PPE, specific to the job task, shall be provided when necessary (e.g., face shield, earplugs, welding goggles/mask). See Chapter I-3, *Personal Protective Equipment (PPE)* of this manual.

14.8.3 Full-body harnesses and lanyards (with lifelines where required) shall be used whenever a worker could fall more than 1.8 m (6 ft). See Chapter II-5, *Fall Protection*.

14.9 Heavy Equipment Guards

Heavy equipment, such as cranes and bulldozers, shall be equipped with wire mesh guards over windows and solid protection over the driver's position to protect the operator from flying/falling debris.

15. Rope Access

15.1 Purpose

This chapter describes the minimum safety procedures and responsibilities for performing rope access activities conducted by authorized contractors.

In Saudi Aramco, rope access is a technique for using ropes to get into and out of work spaces and for work positioning. It always incorporates two separately rope secured systems, and uses a harness in combination with other devices.

15.2 Scope

All rope access activities within SA facilities, SA project sites, and at project support facilities covered under SA Land Use Permits including laydown yards, must be in accordance with this chapter and local instructions.

Rope access activities conducted by SA Fire Protection Department (FrPD) as part of their normal activities or rescue techniques are not covered by these requirements.

15.3 References

Saudi Aramco (SA) General Instructions (GI) 2.100, *Work Permit System*

SA Safety Handbook, *Minimum Safety Rules*

SA Safety Management Guide (SMG) 06-004, *Portable Gas Monitor* (PGM)

International Rope Access Trade Association (IRATA) *International Code of Practice for Industrial Rope Access* (ICOP) – English TC – 102Eng – V002

International Organization for Standardization (ISO) 22846 *Personal equipment for protection against falls – Rope access systems* – 2012

15.4 General Requirements

15.4.1 All rope access activities in SA must be conducted following IRATA *International Code of Practices* and work methods.

15.4.2 Rope access contractors must comply with all SA safety standards, except when these standards may contradict IRATA requirements or may create unacceptable hazards for the rope access technicians. In case of conflicting requirements, the SA Proponent Organization (SAPO) must

notify Loss Prevention (LP) of such conditions officially in writing, requesting technical guidance or resolution. Rope access work must not commence until the conflict is resolved.

15.4.3 Only IRATA Certified Full Member Operator Companies can perform rope access activities.

15.4.4 Only IRATA Certified Trained personnel may perform rope access activities.

15.4.5 At all times, any rope access activity must be supervised on site by an IRATA Certified Level III Technician.

15.4.6 IRATA certifications must be valid for the entire duration of the work.

15.4.7 Method Statement, JSAs, and any other technical document related to the rope access activity must be presented, in writing, by the IRATA Certified Full Member Operator Company, not by any other Contractor or Sub-contractor.

15.4.8 Saudi Aramco personnel may not take part in any work at height activity conducted using rope access techniques or equipment. This includes being attached to a qualified rope access technician.

15.4.9 Means of radio communication between the Contractor Rope Access Supervisor (CRAS) and the rope access crew must be continuous.

15.4.10 Due to the potential for objects to fall, the area must be barricaded, warning signs posted at all potential entry points, and supervision must be provided at all times. The barricaded area must be large enough to protect workers at ground level.

15.4.11 When the job is conducted in areas with a risk of exposure to vapors and gases, rope access crew must carry and use a personal gas monitor device at all times, as per SMG 06-004, *Portable Gas Monitor*.

15.4.12 The use of battery-operated elevation devices is the preferred method of ascending and descending, both during normal activities and during rescue operations. The use of these devices must be in accordance with SA work permit requirements and Electrical Area Classification.

15.5 Pre-Planning of rope access operations

15.5.1 Before hiring any rope access contractor, the SAPO must prepare a technical proposal justifying the use of "rope access". The proposal must include:

A. Brief description of the job (in most cases, no more than 3 pages).

B. Complete technical risk assessment with the different options evaluated to execute the job, including rope access (no more than 7 pages).

C. Evidence of the contractor's IRATA Full Member Operator certification and their experience conducting similar jobs.

15.5.2 The SAPO Manager must submit this technical proposal in writing for concurrence to LP Global Safety Assessment & Compliance Division.

15.5.3 Within 10 working days, LP will notify the SAPO in writing about the LP technical position and any additional requirements to proceed, if the proposal is acceptable.

15.6 Planning of rope access operations

15.6.1 The SAPO manager/Project Leader must submit to the LP Area Office a "Rope Access Plan" prepared by the specialized contractor that must include, but is not limited to, the following:

A. Complete Method Statement.

B. All other applicable requirements as established in this Manual and other SA safety GIs and standards, including Risk Assessment, Hazard Identification Plan (HIP), Emergency Response Plan (ERP), Rescue & Retrieval Plan, and Job Safety Analysis (JSA).

C. Any additional requirements as established in 15.5.3.

15.6.2 The SAPO must formally appoint a Proponent Rope Access Supervisor (PRAS) for the entire duration of the job. The appointed PRAS must be a technically or operationally experienced staff member.

15.6.3 The SAPO, guided by LP, must involve the required stakeholders, including FrPD, Consulting Services Department (CSD), Aviation, Engineering, or any others as demanded by the technical characteristics of the job.

15.6.4 All anchoring points to be used for rope access activities must be approved, initially by the SAPO engineering organization and then concurred by CSD.

15.6.5 Once all safety requirements have been met, LP Area Office will communicate by memorandum with the SAPO manager/Project Leader the concurrence to execute the rope access activity.

15.7 Execution of rope access operations

15.7.1 Prior to the execution, a PRAS must be appointed.

15.7.2 The PRAS must maintain the Rope Access Plan at the jobsite, and is responsible for its completeness and integrity during the execution phase.

15.7.3 The Rope Access Plan must contain:

A. Concurrence memorandum from LP (15.5.3 and 15.6.5).

B. Approved Method Statement and Risk Analysis.

C. Rope Access Safety Method Statement (as per IRATA ICOP Annex B).

D. Approved Job Safety Analyses (JSAs).

E. Emergency Response Plan (ERP) and Emergency Rescue Procedure.

F. All original signed Daily Rope Access Checklists for the duration of the job.

G. Copy of the IRATA certifications for each rope access technician.

H. Any other documents as required.

15.8 Responsibilities

15.8.1 SAPO Manager is responsible for the pre-planning of the rope access activities (as per section 15.5).

15.8.2 SAPO manager/Project Leader is responsible for the planning and safe execution of the rope access activities (as per section 15.6 and 15.7).

15.8.3 The PRAS is responsible for the on-site safe execution of the rope access activities. They must ensure that all precautionary measures are in place and in compliance with the Rope Access Plan and all applicable SA standards and regulations, including:

A. Ensuring that the Rope Access Plan is available at the jobsite, they are also responsible for its completeness and integrity during the execution phase.

B. Reviewing and approving the Rope Access Daily Checklist (attached).

C. Ensuring proper work permits are issued prior to allowing work to commence.

D. Coordinating simultaneous operations (SIMOPS) at the job site, when applicable.

E. Evaluating any changes due to the working conditions at the site, with prior written consultation with LP and stakeholders.

F. Having authority to Stop Work at any time if conditions could affect the safety of the personnel or the facilities.

G. Before work starts at site, verifying that all rope access technicians have performed rope access work during the previous six months and do not require IRATA re-examination.

15.8.4 LP is responsible for:

A. The revision and concurrence of rope access activities as per sections 15.5 and 15.6.

B. Field support to ensure conditions established in 15.6.5 are complied with.

C. Provide support and consultation on any technical issue.

15.8.5 Work Permit Issuer must:

A. Verify and sign the Rope Access Daily Checklist.

B. Issue Work Permit(s) as per GI 2.100.

15.8.6 Work Permit Receiver must:

A. Verify and sign the Rope Access Daily Checklist.

B. Sign the Work Permit and comply with requirements as per GI 2.100.

15.8.7 The CRAS, who shall be a Level III technician, must:

A. Prepare the Rope Access Daily Checklist (attached).

B. Maintain an updated version of the Safety Method Statement (IRATA ICOP Annex B).

C. Ensure compliance with IRATA Code of Practices and applicable instructions.

D. Comply with all requirements as established in the Method Statement, JSAs, Work Permits, and all applicable documents.

E. Before work starts at site, verify that all access technicians have worked as such during the previous six months and do not require IRATA re-examination.

F. Discuss and review the daily activities with the crew before start.

G. Stop the work at any time if conditions are unsafe.

H. Be on-site at all times during rope access activities.

15.9 Rope Access Equipment

15.9.1 Personal Protective Equipment (PPE) and all rope access equipment must meet the standards and conditions established per IRATA.

15.9.2 In the case of conflicting requirements, LP must evaluate and provide technical instructions.

15.10 Work Procedures

15.10.1 Work procedures and methods used during rope access activities may only be prepared by IRATA Certified Full Member Operator Company and must follow IRATA standards, including Safety Method Statement (IRATA ICOP Annex B).

15.10.2 When required, LP can establish safety requirements in addition to or exceeding those established by IRATA.

15.11 Training

15.11.1 Rope access work can only be conducted by IRATA Certified Technicians.

15.11.2 Rope access technicians must comply with IRATA's Training Assessment & Certification Scheme (TACS).

15.11.3 Rope access technicians must keep their certifications with them at all times during the execution of the activity.



Key

1 Working line
2 Safety line
3 Device lanyard
4 Back-up device
5 Descending device
6 Harness
7 Tool tether

Figure K.1 — Typical method of working in the descent mode in a rope access system (with descending device locked)

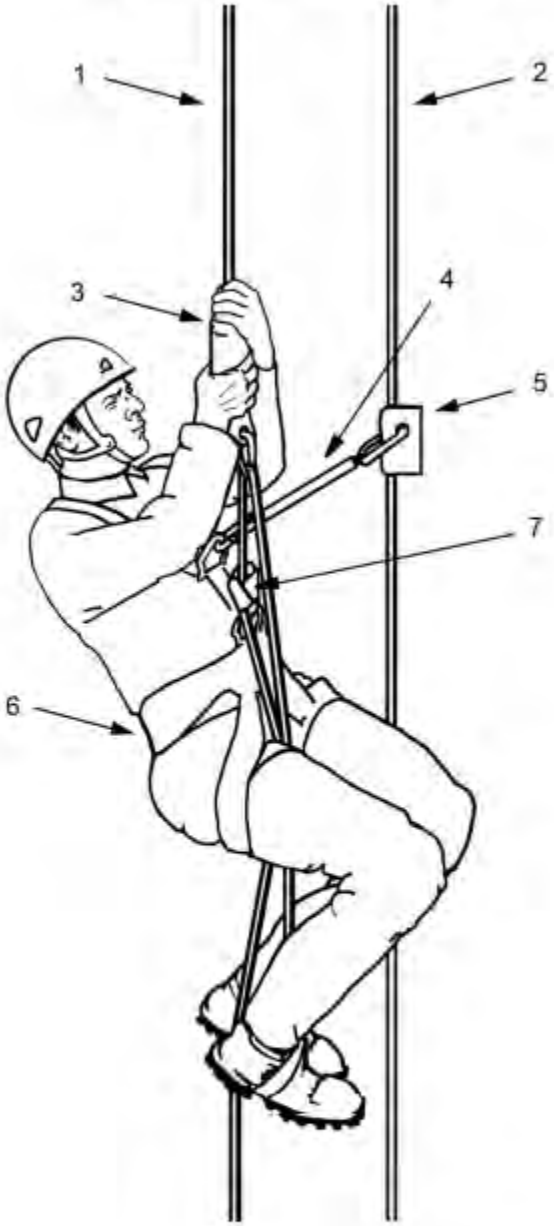

Key

1 Working line
2 Safety line
3 Ascending device (with foot loop)
4 Device lanyard
5 Back-up device
6 Harness
7 Ascending device (chest)

Figure K.2 — Typical method of ascending in a rope access system

Typical Rope Access Equipment

Ascending	Ascending
	
Descending	**Back-up**
	
Connector	**Safety helmet**
	
Full body harness with work positioning harness	**Battery operated power ascender**
	

Rope Access Daily Checklist

Department		**Date:**
Division / Project		
Job Description		

#	Requirement	Yes	N/A
1.	The rope access equipment has been inspected and found safe to operate		
2.	All required PPE has been inspected and found safe to operate		
3.	Radios are charged and tested		
4.	Battery operated elevation devices are charged and tested		
5.	All personal portable gas monitors are tested and operational		
6.	Work plan for today has been discussed and agreed among the crew		
7.	JSAs for today's work have been reviewed and discussed		
8.	Exclusion zones are properly barricaded		
9.	Rescue Plan has been discussed		
10.	Weather conditions are acceptable to conduct the job		
11.	Weather forecast is acceptable to conduct the job.		
12.	Required rescue equipment is tested and readily available at the site		
13.	Rope access technicians' certificates are all valid.		
14.	Other		
15.	Other		

Responsible person	Name	Signature	ID / Badge #	Date
Contractor Level III Technician (CRAS)				
Proponent Rope Access Supervisor (PRAS)				
Work Permit Issuer				
Work Permit Receiver				

Note:
This checklist does not replace the mandatory *Hazard Analysis Checklist* of the work permit issuance process, as required by GI 2.100, *Work Permit System*.
This checklist is intended to verify that all required aspects of the rope access activity are implemented prior to beginning the work.
This checklist must be filled, signed, and retained on site as per Section 15.7.3.F.

1. Machine Guarding

1.1 Purpose

This chapter describes minimum requirements for guarding of moving machinery parts that could cause injury to personnel.

1.2 References

Saudi Aramco (SA) Engineering Standard (SAES):

SAES-B-053, *Machine Safety Guarding, Elevators, Escalators, and Conveyors*

1.3 General Requirements

1.3.1 Machinery Guards

A. Moving machinery parts shall be guarded if located 2.5 m (8.2 ft) or less above the floor or working surface. This includes flywheels, shafts, pulleys and belt/chain drives.

B. Guards shall be installed on equipment before arrival on-site and maintained in position during operation.

C. Guards removed for routine maintenance or for repair shall be reinstalled before the equipment is returned to service.

D. Guards shall be constructed so that no part of the body can contact the moving surface. Guards shall have openings no larger than 1.3 cm (0.5 inches).

E. Guards shall be constructed of sufficient strength to contain a failure of the rotating part(s) being guarded.

F. Guards shall be noncombustible and shall be otherwise designed in such a way not to create a potential source of ignition.

G. Shafting under bench machines shall be enclosed by stationary casing at sides and top, or sides and bottom, as the location requires.

1.3.2 Point of Operation Guards

A. Point of operation guards shall prevent entry of hands or fingers reaching through, over, under or around the guard.

B. See Chapter I-11, *Hand Tools and Power Tools*, of this manual for additional guarding requirements.

C. Guards shall be fastened to the equipment in a manner not easily removed by the operator.

D. Rotating saw blades, grinding wheels, cut-off wheels, etc., shall be guarded while in use. See Figures 1.1, 1.2 and 1.3.

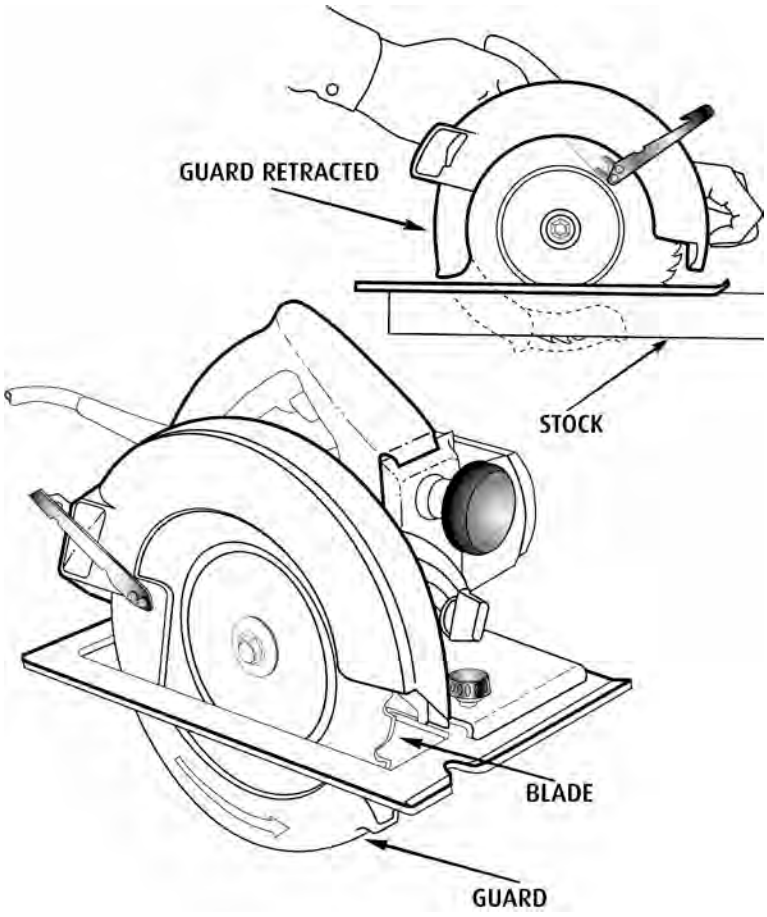

Figure 1.1 Typical Circular Saw with Guard

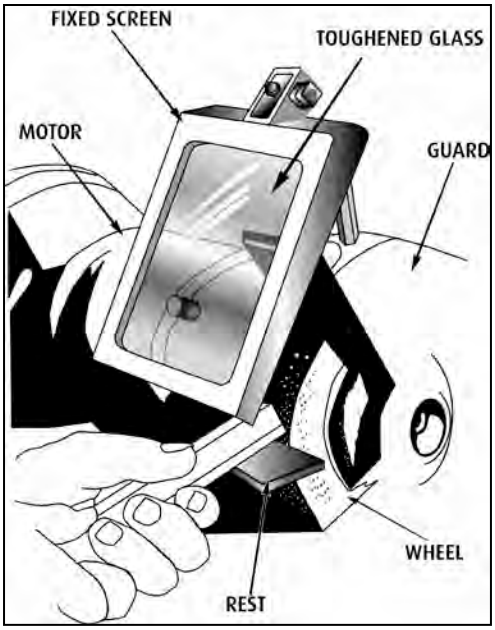

Figure 1.2 Grinding Wheel with Protective Viewing Glass



Figure 1.3 Cutting Blade with Guard

2. Mechanical and Heavy Equipment

2.1 Purpose

This chapter describes minimum requirements for safe operation, inspection, and maintenance of mechanical and heavy equipment.

2.2 References

Saudi Aramco (SA) General Instructions (GIs):

GI 2.100, *Work Permit System*

GI 2.702, *Moving Drilling Rigs, High Clearance Equipment/ Loads, or Operating Cranes Under or Near Powerlines*

GI 7.024, *Marine and Offshore Crane, Hoist and Rigging Operations*

GI 7.025, *Heavy Equipment Operator and Rigger Testing and Certification*

GI 7.030, *Inspection and Testing Requirements for Elevating/Lifting Equipment*

GI 1781.001, *Inspection, Testing and Maintenance of Fire Protection Equipment*

SA Safety Handbook, *Minimum Safety Rules*

SA *Forklift Operations Guide*

American National Standards Institute (ANSI)/ Scaffold Industry Association (SIA):

ANSI/SIA A92.2, *Vehicle-Mounted Rotating and Elevating Aerial Platforms*

ANSI/SIA A92.3, *Manually Propelled Elevating Aerial Platforms*

ANSI/SIA A92.5, *Boom-Supported Elevating Work Platforms*

ANSI/SIA A92.6, *Self-Propelled Elevating Work Platforms*

ANSI/SIA A92.8, *Vehicle-Mounted Bridge Inspection and Maintenance Devices*

ANSI/SIA A92.9, *Mast-Climbing Work Platforms*

ANSI/SIA A92.10, *Transport Platforms*

ANSI/Industrial Truck Standards Development Foundation (ITSDF):

ANSI/ITSDF B56.1, *Safety Standard for Low Lift and High Lift Trucks*

ANSI/ITSDF B56.6, *Safety Standards for Rough Terrain Forklift Trucks*

American Petroleum Institute (API):

API 2219, *Safe Operation of Vacuum Trucks in Petroleum Service*

American Society of Mechanical Engineers (ASME):

ASME B30.27, *Material Placement Systems*

2.3 General Requirements

2.3.1 A SA hot work permit shall be obtained prior to the use of equipment with internal combustion engines in restricted areas per GI 2.100.

2.3.2 Mechanical and heavy equipment shall be inspected on a regular basis by a competent heavy equipment inspector or mechanic as per the manufacturer's recommendations. In addition, equipment covered under GI 7.030 shall have a valid inspection sticker issued by SA or an SA-approved third-party inspection agency.

2.3.3 Pre-use inspections shall be conducted on all mechanical and heavy equipment. Operators performing these inspections shall ensure the following, at a minimum, prior to operating the equipment:

A. No fuel, oil, hydraulic fluid, water, etc., leaks are coming from the equipment. Spills shall be immediately contained, cleaned up, and properly disposed.

B. Hose and pipe connections are checked and free of wear and cracks. Defective hoses/pipes shall be replaced or repaired.

C. All lights and warning devices operate properly.

D. Wiring inspected and free of damage or improper repairs.

E. Fire extinguisher(s) available, inspected, tagged, and operable.

2.3.4 Only authorized personnel shall be allowed to enter the work area where mechanical and heavy equipment is in operation. When entering the work area, authorized personnel shall make direct eye contact with the equipment operator(s) to ensure their presence is known.

2.3.5 Trained groundsmen or flagmen shall be used when human traffic is present in a heavy equipment work area.

2.3.6 Contractors shall submit to the SA proponent organization (SAPO) a plan of how they will manage hazards associated with human/machine interfaces during heavy equipment operations. The plan shall consider but not be limited to:

A. Vehicle backup alarms.

B. Pedestrian and vehicle only zones.

C. High-visibility clothing.

D. Identifying low-visibility areas.

E. Use of spotters.

F. Proximity detectors.

G. Blind spot cameras.

2.3.7 Operators shall ensure the work area is clear prior to operating mechanical and heavy equipment.

2.3.8 When an operator cannot see the entire area around the equipment, attendants/spotters wearing high-visibility (e.g., reflective) fluorescent vests shall direct and assist the operator.

2.3.9 Reverse/backup alarms shall be audible at a level at least10 dB above ambient noise on all heavy equipment.

2.3.10 Preventive maintenance schedules shall be established and strictly followed for each piece of equipment.

2.3.11 During maintenance or repair work, operators shall dismount from equipment unless otherwise instructed, and the immediate area around the equipment shall be cleared of unauthorized personnel.

2.3.12 Repairs, adjustments, or replacement of parts shall not be permitted on operating equipment. Equipment shall be stopped and deactivated prior to performing repairs.

2.3.13 Heavy equipment tires shall be deflated before repairing them. They shall be inflated inside a strong restraining device (e.g., a tire cage) by increasing the tire pressure gradually.

2.3.14 Equipment operators shall have 360-degree visibility when operating equipment (e.g., curtains/cardboard shall not obstruct the operator's view). Cabs shall be kept clean and clear of items such as rubbish and loose tools. Windows shall be kept clean at all times and shall be replaced if the glass becomes pitted, cracked, or broken.

2.3.15 Equipment shall be located to prevent exhaust fumes from affecting personnel in the area. Gasoline- or diesel-powered equipment shall not be used inside buildings, inside confined spaces or upwind of confined spaces while a confined space entry is ongoing. The potential of exhaust fumes entering the confined space shall be prevented if simultaneous activities are unavoidable. (See Chapter I-6, *Confined Spaces*.)

2.3.16 Engines shall be stopped, the parking brake applied, and wheels chocked when mechanical or heavy equipment is left unattended, including overnight.

2.3.17 Blades, buckets, scraper bowls, and other hydraulic components shall be lowered to the ground when it is left unattended. Ignition keys shall be removed and/or battery cables disconnected to avoid startup by unauthorized personnel.

2.3.18 Any mechanical or heavy equipment left unattended at night, if adjacent to a highway or construction area where work is in progress, shall have appropriate lights/reflectors installed or barricades shall be installed and equipped with appropriate lights/reflectors to identify the location of the equipment.

2.3.19 Personnel shall not ride in or work off any part of the equipment, unless it is specifically designed for such work.

2.3.20 Personnel shall not rest or sleep (e.g., seek shade) under or around mechanical or heavy equipment at any time.

2.3.21 Equipment shall be stopped and engines turned off before refueling.

2.3.22 Gasoline and diesel powered equipment shall only be refueled in well ventilated areas. Exhaust pipes shall be kept away from combustible/flammable materials.

2.3.23 When a crane or other mechanical and heavy equipment, such as concrete pumping equipment or boom truck, is operating near or traveling under an energized overhead power line, a designated signalman or flagman shall be assigned to ensure that minimum distances are maintained (see Table 2.1).

Table 2.1 Overhead Power Line Clearance Distances

Overhead (O/H) Power Line Voltage		Required Clearances for Equipment Operating Around Energized O/H Power Line		Required Clearances for Cranes and Equipment Passing Under O/H Power Lines w/ No Load and Attachments Lowered	
Min kV	Max kV	ft	m	ft	m
0	50	10	3.1	6	1.8
50	200	15	4.6	10	3.1
200	350	20	6.1	10	3.1
350	500	25	7.6	16	4.9

2.3.24 Goal posts of the corresponding height shall be installed at a minimum of 25 meters horizontal distance from the power line, or as recommended by

the SA Power Operations Department, to warn and assist the operator in determining the safe-approach distance.

2.4 Heavy Equipment Operator Qualifications

2.4.1 Operators shall possess a valid Saudi Arabian government (SAG) heavy equipment license and a certification per GI 7.025 (as required) for operation of the specific heavy equipment. Additional equipment not currently listed in GI 7.025 may also require a specific certification. The SAPO shall be contacted for information regarding equipment not listed in GI 7.025.

2.4.2 Operators of equipment not requiring certification shall be trained, tested, and issued written authorization by their employer for the specific equipment to be operated.

2.4.3 Non-SA marine personnel may possess a home-country certification from a recognized international institution for heavy equipment used offshore (see GI 7.024 for additional information).

2.5 Portable Air Compressors

2.5.1 Portable air compressors shall be properly designed, inspected, tested, and maintained, and shall be equipped with safety relief valves. Air receivers shall have periodic documented inspections.

2.5.2 Daily checks shall be performed on the compressor's pressure relief valve, fuel, oil, and water levels. The air reservoir shall be drained of any trapped water prior to use.

2.5.3 Compressors shall be equipped with an easily accessible and visible emergency shutdown switch or button.

2.5.4 Compressed air hose joints shall be secured with proper couplers (twist lock fittings). Crimped, clamped, or banded connections shall be used to secure compressed air hoses to couplers.

2.5.5 Safety wires/pins and/or whip checks shall be used at all coupler connections to prevent the tool and/or hoses from being inadvertently disconnected.

2.5.6 Goggles and a full face shield shall be worn when compressed air is used during special cleaning/purging tasks.

2.5.7 Hearing protection is required when the noise level exceeds 85 dB.

2.5.8 Compressed air shall not be used to remove dust or dirt from clothing or individuals. A compressed air hose shall not be directed towards an individual for any reason.

2.5.9 Horseplay with compressed air shall be strictly forbidden.

2.5.10 Air compressors supplying breathing air shall:

A. Have the air intake for the compressor located at a site free of air contaminants (e.g., upwind of any internal combustion engines).

B. Have pressure relief valve(s) on air receiver(s).

C. Include a high-efficiency breathing air filter and water/oil trap before the filter in the air delivery system to remove moisture, oil mist, and particulates.

D. Have continuous inline carbon monoxide (CO) monitoring with an audible alarm set to 10 ppm for oil lubricated compressors.

E. Operate at a maximum of 118 °C (245 °F) and 150 psig (see the manufacturer's specifications).

F. Be fitted with air intake filters to remove particulates.

G. Have an automatic high-temperature alarm on the air output set at a maximum temperature of 60 °C (140 °F).

H. Outlet air temperature delivered to the operator's mask/hood shall be less than 37.8 °C (100 °F). Use of air-cooling devices (e.g., vortex tubes) may be necessary.

I. Supply air at a rate of 170 L/min (6 SCFM) for hoods without a vortex tube and 708 L/min (25 SCFM) for hoods with a vortex tube.

J. Be adequately grounded during use to prevent formation of static electricity.

K. Have cleaning and inspection programs and written operating procedures developed/provided by the operator's management.

L. Be tested quarterly per GI 1780.001 by a SA-approved independent third party testing facility to ensure the air quality meets Compressed Gas Association (CGA) Grade 'D' air quality requirements, including:

- Oxygen, not less than 20% nor more than 23% by volume.
- Carbon monoxide, not more than 10 parts per million (ppm) by volume.
- Carbon dioxide, not more than 0.1% by volume.
- Oil mist, not more than 5 mg/m^3 at standard temperature and pressure (STP).
- Particulates, not more than 5 mg/m^3.

- Water vapor, not more than 0.76 mg/L.

2.6 Portable Electrical Generators

2.6.1 A trained electrician shall ensure that wired electrical connections are properly made.

2.6.2 Outlets supplying portable electric power tools shall be equipped with a functioning residual current device (RCD) and be limited to no more than 240 volts. See Chapter I-11, *Hand Tools and Power Tools*, for additional information on portable electric power tools.

2.6.3 Users shall ensure generators have been inspected and approved for use.

2.6.4 Generators shall have an accessible stop button/shutdown switch for emergency shut off.

2.6.5 Pulleys, belts, and fans shall be completely enclosed or otherwise guarded. See Chapter III-1, *Machine Guarding*, for additional information.

2.6.6 Engine cover side panels shall be closed at all times when the engine is running.

2.6.7 The generator shall be properly grounded during use.

2.6.8 Portable generator equipment shall be located 23 m (75 ft) away from flammable and combustible material storage areas. The generator exhaust should be directed away from any combustible or flammable material. A hot work permit shall be issued for use of a generator in a restricted area per GI 2.100.

2.7 Forklifts

2.7.1 Forklifts shall be operated and inspected in accordance with ANSI/ITSDF B56.1, and the manufacturer's recommendations.

2.7.2 Forklifts with additional special equipment or attachments shall meet the manufacturer's specifications.

2.7.3 Forklifts shall have a valid inspection sticker.

2.7.4 Forklifts shall be equipped with overhead protection, seatbelts, a fire extinguisher and a backup warning alarm.

2.7.5 Only forklift operators certified per the requirements of GI 7.025 shall operate forklifts.

2.7.6 Forklift operators shall conduct a daily forklift pre-use inspection (e.g., Forklift Daily Inspection Checklist provided in the SA *Forklift Operation*

Guide). Inspections shall include checking the functionality of backup warning alarm and safety devices.

2.7.7 Forklifts shall only be used on stable road/surface conditions. Loads shall always be in the "uphill" position when traveling up an inclined surface.

2.7.8 Forks shall be tilted back and raised no more than 15-20 cm (6–8 inches) above the ground to maintain stability when traveling with loads.

2.7.9 Loads shall not exceed the manufacturer's rated lifting capacity (e.g., as indicated on the data plate).

2.7.10 Unstable or insecure loads shall not be transported. Loads shall not be raised or lowered while the forklift is moving.

2.7.11 Forklifts shall be rated for the area of operation (e.g., use "EX" trucks in areas that have fire or explosion risks). Diesel or gasoline powered forklifts shall not be used in closed buildings, warehouses or poorly ventilated areas.

2.7.12 Forklifts shall not be left unattended with the engine running. When forklifts are parked, the forks shall not be in a raised position.

2.7.13 Operators shall travel in reverse when the load obstructs the operator's forward view. Operators shall travel in reverse when going down an inclined surface, keeping the load "uphill".

2.7.14 Personnel other than the operator shall be prohibited from riding on the forklift, including on the forks.

2.7.15 Personnel shall not be raised or lowered by a forklift, unless they are contained within an attachment specifically designed for this purpose and the model of forklift used.

2.7.16 Personnel shall not position any part of their body between moving parts of the forklift.

2.7.17 Electric (battery) powered forklifts shall be recharged in well- ventilated areas to prevent the possible buildup of hydrogen gas (flammable) while recharging.

2.7.18 Rough terrain fork trucks and telescopic handlers (telehandlers) shall be manufactured, operated and inspected in accordance with ANSI/ITSDF B56.6.

2.7.19 Telehandlers shall be provided with clearly legible load charts visible to the operator in their operating position and the operator shall be trained in their use.

2.8 Excavators (Including Backhoes and Trenching Equipment)

2.8.1 Personnel shall not work within the boom radius while an excavator is in operation or where they could be struck by any part of the excavator.

2.8.2 Outriggers, if provided, shall be fully extended when operating a mechanical excavator.

2.8.3 Excavators shall maintain a clearance of at least 0.6 m (2 ft) from any fixed object while performing a swinging motion.

2.8.4 Mechanical excavators shall not be used within 3 m (10 ft) of any pipeline, equipment, cable or other obstruction.

2.8.5 Spotters wearing high-visibility (e.g., reflective) vests shall be used during excavation activities to assist and guide the operator as needed.

2.8.6 Booms shall be latched and secured before travel.

2.8.7 Only mechanical excavators designed by the manufacturer to perform lifting shall be used to raise, lower or suspend a load.

2.8.8 Vacuum excavators may be used to locate utilities or within 3 m (10 ft) of utilities when the equipment is designed for that purpose and the appropriate safeguards are taken. Safeguards include, but are not limited to, reducing the water/air/suction pressure and the use of rubber or similar material on the nozzle and hose ends.

2.9 Graders, Dozers, Scrapers, Loaders, and Mini-Loaders

2.9.1 Spotters/flagmen wearing high-visibility (e.g., reflective) vests shall be used to assist and guide the operator as needed.

2.9.2 Equipment shall be provided with rollover protection.

2.9.3 Engines shall not be left running when the equipment is unattended. Operators shall shut off the engine and remove the ignition key before leaving the machine.

2.9.4 Equipment shall be blocked in position if there is work to be performed underneath the equipment.

2.10 Dumpers and Dump Trucks

2.10.1 Personnel shall not ride in the skip or on the engine cover of dumpers and dump trucks.

2.10.2 Dump bodies shall be fully lowered before leaving the dump area.

2.10.3 Dumper skip latches shall be in good working order. The release mechanism shall function smoothly.

2.10.4 Dumpers and dump trucks shall be regularly maintained with particular attention to brakes, steering, and skip release mechanisms. Proper towing eyes with shackles or pins shall be provided if they are used for towing.

2.10.5 Dump bodies shall be fully lowered when repair or maintenance is being performed. Dump bodies shall be blocked if they are to be in the raised position for maintenance or any extended period. Hydraulic rams shall not be used to support a raised body.

2.11 Concrete Mixers and Batch Plants

2.11.1 Proper personal protective equipment (PPE) such as respirators, hearing protection and goggles, shall be worn (see Chapter I-3, *Personal Protective Equipment [PPE]*).

2.11.2 Chains, gears, revolving shafts and other moving parts shall be properly guarded (see Chapter III-1, *Machine Guarding*).

2.11.3 Safety chains, catches and lifting mechanisms shall be in good operating condition.

2.11.4 Empty cement bags shall not be allowed to accumulate in the work area.

2.11.5 Approaches to sand and aggregate bins shall be barricaded. Only authorized personnel shall be permitted access to the site.

2.11.6 Silo access ladders shall meet the requirements of Chapter II-3, *Ladders and Stepladders*.

2.11.7 Silos shall be considered confined spaces and activities performed inside a silo shall meet the requirements of Chapter I-6, *Confined Spaces*.

2.12 Vacuum Trucks

2.12.1 All vacuum truck equipment shall meet the requirements of API 2219.

2.12.2 Vacuum truck cargo tanks shall have:

A. A functioning level indicator and vacuum/pressure gauges to prevent overpressure and overfilling.

B. A minimum design pressure of 25 psi and a minimum test pressure of 40 psi.

C. Overpressure protection in the form of an ASME relief valve or rupture disk.

D. A means of manual depressurization.

2.12.3 Conductive hoses shall be used when loading and unloading flammables and combustibles.

2.12.4 During the loading and unloading of flammables and combustibles, the vapors shall be directed to a safe location away from ignition sources.

2.12.5 Vacuum trucks and their associated equipment shall be tested, inspected, and maintained as per manufacturers' recommendations.

2.12.6 A documented inspection shall be performed on vacuum trucks prior to use (see Appendix A for a sample checklist). As a minimum the inspection shall verify:

A. Valves move freely and are leak free.

B. Floats for level indicators and shutoffs move freely.

C. Gaskets are in good condition.

D. Hose connections and fittings are in good condition.

E. Cargo tank and hoses are empty.

2.12.7 At a minimum, the following shall be adhered to when operating vacuum trucks:

A. Appropriate work permits shall be obtained if operating in a restricted area as per GI 2.100, *Work Permit System*.

B. A job safety analysis shall be performed prior to commencing work.

C. Operator shall never leave the operation at any time.

D. Access shall be restricted at least 7.6 m (25 ft) diameter around the vacuum truck using cones, tape or similar means.

E. Vacuum truck parking brake shall be set and wheels chocked.

F. Truck shall be positioned, if possible, on level ground at least 7.6 m (25 ft) upwind from the material to be loaded or 15.2 m (50 ft) upwind if inside a dike.

G. Truck shall be grounded or bonded to the source container.

H. A dedicated fire extinguisher (minimum 20 lb) shall be kept in close proximity to the loading/unloading operation.

I. If the truck does not have sufficient capacity for the entire contents or spill, it shall only be filled to 90% capacity.

J. When possible keep the hose ends below the level of the liquid being

loaded to prevent air from entering the truck.

K. If vapor recovery is not used, discharge vapors shall be directed to a position either at least 15.2 m (50 ft) downwind of or 3.7 m (12 ft) above the vacuum truck and away from ignition sources.

2.13 Manlifts and Aerial Lifts

2.13.1 "Manlift" in this section refers to elevating work platforms, mobile elevating work platforms, scissor lifts, manlifts, spider lifts, or any other type of aerial work platform whether self- propelled or manually powered.

2.13.2 All manlifts shall be equipped with an anti-entrapment device. Manlifts without anti-entrapment devices shall not be used after Jan. 1, 2017. Newly purchased manlifts shall have anti-entrapment devices installed.

2.13.3 Manlift operators shall be certified on the equipment they will operate as per GI 7.025.

2.13.4 Manlifts shall have both platform (upper) and lower controls. Controls shall be plainly marked as to their function. Lower controls shall provide for overriding the upper controls. Lower level controls shall not be operated, except in case of emergency, unless permission has been obtained from the operator in the lift.

2.13.5 At a minimum, the following shall be adhered to when operating manlifts:

A. A standby man, who is a certified manlift operator (per GI 7.025), shall be available on the ground to operate the lower manlift controls in case of an emergency.

B. Tools shall be in a tool pouch, toolbox, or otherwise secured in the manlift basket. Materials shall not protrude beyond the handrails of the manlift nor shall the handrail be used to support materials of any kind.

C. Outriggers shall be used when installed by the manufacturer and be positioned on pads or a solid surface.

D. Manlifts shall not be operated in wind speeds exceeding 32 km/h (20 mph), unless otherwise specified by the manlift manufacturer.

E. Personnel inside a manlift, whether operator or passenger, shall wear full body harnesses and lanyards attached to the anchor point within the basket of the manlift (see Chapter II-5, *Fall Protection*).

F. When entering or exiting the manlift basket at ground level, personnel shall enter and exit through the manufacturer's intended doorway and under no circumstances climb over the guardrail or jump from the basket to the ground.

G. Personnel shall not leave the basket controls unattended when in an

elevated position. A manlift may not be used to access an elevated work platform or surface unless the following requirements are met:

- Fall arrest procedures and equipment are approved by the SAPO and properly utilized.
- All workers are secured at all times to the basket and/or structure by the use of proper fall arrest equipment.
- A full-body harness with a double lanyard is used.
- One lanyard is attached at all times when transitioning from the basket to the working point and back.
- The second lanyard is attached before the first lanyard is released when moving outside of the basket.
- The standby man (referenced in Section 2.13.5.A) shall be physically present at the specific work location at all times when workers are working in this manner.

H. Personnel shall stand firmly on the floor of the manlift basket or platform. Sitting or climbing on the edge of the basket or using planks, ladders, or other devices to position for work is prohibited.

I. Manlifts shall not be moved with the boom elevated in a working position with workers in the basket, unless the equipment is specifically designed for this type of operation.

J. The brakes shall be set and wheel chocks shall be used when using a manlift on an inclined surface.

2.14 Concrete Pumping Equipment

2.14.1 Concrete pumping equipment shall be manufactured, inspected and operated in accordance with ASME B30.27.

2.14.2 Only personnel trained, certified, and given written authorization by their employer for the specific piece of equipment they are operating shall operate concrete pumping equipment.

2.14.3 Material placement crew (personnel other than the operator responsible for the placing and finishing of the material delivered by the concrete pumping equipment) members shall be confirmed competent in their specific responsibilities by their employer.

2.14.4 Proper PPE shall be used by the operator and material placement crew.

2.14.5 At a minimum, the following shall be adhered to when operating concrete pumping equipment:

A. The operators shall never divert their attention from the operation at any time and never leave the concrete pumping equipment unattended when it is operating.

B. A spotter/signalman shall be used at all times and the operator shall respond to signals (see Figure 2.1 for minimum hand signals) from the spotter and to any stop signal from any person.

C. Equipment shall not be used as a crane or hoist to lift objects or loads other than equipment specified by the manufacturer to be attached to the boom.

D. Hoses or other components of the delivery system shall not be dragged by the equipment.

E. The equipment shall not be moved without the outriggers or boom properly stowed as required by the manufacturer.

F. The equipment shall not be operated in lightning or when the wind speed is greater than 32 km/h (20 mph).

G. The boom shall not be loaded with hanging hoses or pipes heavier than equipment specifications. A pipeline shall not be attached directly to the boom restricting boom movement. The boom shall not be secured to any fixed object.

H. The equipment shall be operated a safe distance from overhead electrical power lines as per Table 2.1.

I. Concrete pumping equipment shall be located on stable ground with outriggers deployed if equipped.

J. Each piece of hanging delivery system shall be connected to the boom with a hose or a sling.

K. Compressed air shall not be used to clean out the delivery pipeline unless expressly allowed by the equipment manufacturer.

Figure 2.1 Concrete Pumping Equipment Hand Signals

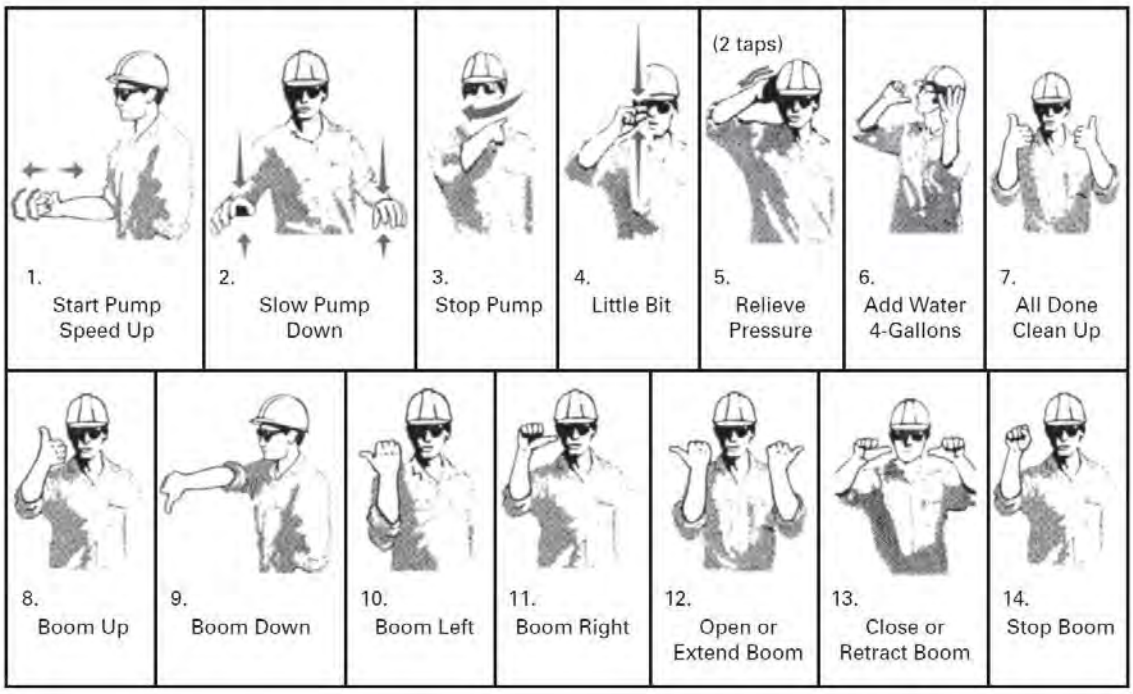

Appendix A

VACUUM TRUCK PRE-USE CHECKLIST			
	INSPECTION ITEM	YES	NO
1.	Are valves moving freely and leak free?		
2.	Do other connections appear leak free?		
3.	Do the hose connections and fittings appear in good condition?		
4.	Are the hoses and cargo tank empty?		
5.	Does the cargo tank have a relief device?		
6.	Does the cargo tank have pressure and level gauges and do they appear to be in working condition?		
7.	Does the truck have a means to minimize carryover such as baffles, filters/screens, knockouts, shutoffs?		
8.	Is there a means to manually depressurize the truck?		
9.	Does the cargo tank have a nameplate that contains the minimum design (25 psi) and test pressure (40 psi)?		
10.	If being used for hydrocarbons, is the truck equipped with conductive hoses?		
Notes:			
Company representative:		Vacuum truck operator:	
Instructions: Complete checklist upon arrival of truck and prior to issuing permit. Any “no” answer should be addressed prior to issuing permit and commencing loading or unloading activities.			

3. Electrical Equipment

3.1 Purpose

This chapter describes minimum requirements for safely performing work on or near electrical equipment, including power lines.

3.2 References

Saudi Aramco (SA) General Instructions (GIs):

GI 2.100, *Work Permit System*

GI 2.702, *Moving Drilling Rigs, High Clearance Equipment/Loads, or Operating Cranes Under or Near Power-Lines*

GI 2.706, *Responsibility for Power Systems Operations and Maintenance*

GI 2.721, *Electrical Arc Flash Hazard Mitigation*

GI 6.012, *Isolation, Lockout and Use of Hold Tags*

GI 7.024, *Marine and Offshore Crane, Hoist, and Rigging Operations*

GI 7.028, *Crane Lifts: Types and Procedures*

GI 7.029, *Rigging Hardware Requirements*

SA Engineering Standard (SAES):

SAES-B-064, *Onshore and Near Shore Pipeline Safety*

SA Power Distribution Instructions (PDIs):

No. 10.0, *Power System Operations*

No. 10.1, *Potential Testing Certification*

No. 11.0, *Hold Orders, Clearances and Permissions*

No. 30.0, *Safe Distance from Live Exposed High Voltage Apparatus*

No. 34.0, *Work Alone Policy*

No. 40.0, *Safety Equipment*

No. 40.1, *Insulating Gloves and Sleeves*

No. 50.0, *Safety Grounding*

SA *Safety Handbook, Minimum Safety Rules*

National Fire Protection Association (NFPA):

NFPA 70, *National Electrical Code (NEC)*

3.3 General Requirements

3.3.1 Only properly equipped personnel who are trained and certified for electrical work shall perform maintenance or operation work on electrical equipment or be present within minimum clearances of such equipment.

3.3.2 Personnel with potential exposure to arc flash hazards shall be trained and certified in accordance with the requirements of the Saudi Aramco Safe Electrical System Operations Program, and the requirements of GI 2.721. They shall be familiar with the specific work procedures and/or tests required.

3.3.3 Personnel not meeting the training and certification requirements of the Saudi Aramco Safe Electrical System Operations Program and those of GI 2.721 shall not engage in activities that potentially expose them to arc flash hazards.

3.3.4 Personnel authorized to conduct electrical work on equipment shall pass the electrical hazard recognition training provided by SA Training and Development (T&D). See GI 2.721.

3.3.5 Personnel shall not wear rings, wristwatches, jewelry, or other similar metallic objects while working within arm's length of energized electrical equipment.

3.3.6 Residual current devices (RCDs), including ground fault circuit interrupters (GFCIs, see Figures 3.1 and 3.2) and earth leakage circuit breakers (ELCBs), or ground-fault isolation systems shall be used for portable electrical tools, temporary wiring, confined space entry activities, and in potentially wet or damp areas. See Chapter I-11, *Hand Tools and Power Tools*.

3.3.7 Electrical and static-producing equipment, including air movers, shall be properly grounded and bonded and shall be provided with ground-fault protection.



Figure 3.1 GFCI (Building Setting)



Figure 3.2 GFCI (Industrial Setting)

3.3.8 Installation of electrical equipment and circuits shall conform to NFPA 70, relevant SA engineering standards (e.g., P-series) and the approved design package. See Chapter I-11, *Hand Tools and Power Tools*, for temporary lighting requirements.

3.3.9 When electrical equipment is to be worked on while de-energized, it shall be properly isolated per GI 6.012 (e.g., disconnected from all power sources, locked, tagged, cleared, and energization attempted to prove effectiveness). For electrical systems, appropriate isolation shall include locking or removal of switches, circuit breakers, fuses, or other isolating devices, or disconnection of all power supplies. Isolation of electrical power equipment and circuits operated at 480 volts or higher shall include disconnection of all power sources, voltage testing, and grounding. Locks and hold tags shall be used to prevent circuits from being inadvertently energized (see Figure 3.3).



Figure 3.3 Electrical Isolation Lock and Hold Tags

3.3.10 Metal ladders shall not be used when working on or near energized electrical equipment or conductors; only nonconductive ladders (e.g., wood, fiberglass) shall be used.

3.3.11 Proper personal protective equipment (PPE) to protect against shock hazards, including rubber insulated gloves, rubber insulated sleeves (as required), goggles and face shield (as required), and dielectric shoes, shall be worn when conducting electrical work on or near energized electrical equipment or as required in GI 2.721, Supplement 2, when conducting work that potentially exposes an employee to arc flash hazards.

3.3.12 Rubber blankets shall be used to provide insulation from nearby exposed energized conductors.

3.3.13 Rubber insulating gloves shall be inspected and air tested prior to each use. If the inspection date has expired, the gloves shall not be used. Refer to PDI 40.0 for guidance. Leather (mechanical) protectors shall always be worn over high voltage rubber insulating gloves. Gloves shall always be stored in the bag provided (cuff end first.)

3.3.14 Hand/power tools and personal ground cables (jumpers) shall be visually inspected by the user prior to each use.

3.3.15 Defective electrical equipment and tools shall not be used and shall be immediately removed from the job site.

3.3.16 Insulating protective equipment (e.g., rubber gloves and blankets) and hot sticks shall be periodically tested and tagged by a qualified testing laboratory, as per the manufacturer's recommendations and GI 2.721. See PDI 40.0 for guidance. Evidence of such testing shall be made available upon request.

3.3.17 Electrical testing equipment (e.g., voltage meters) shall be periodically calibrated and tagged by a testing laboratory as per the manufacturer's recommendations and GI 2.721.

3.3.18 Personal ground cables shall be properly inspected/tested and tagged at least annually. See PDI 50.0 for guidance.

3.3.19 Electrical interlocks shall not be rendered inoperative by removal, modification, or destruction.

3.3.20 Fuses shall be removed with approved fuse pullers and replaced only with the proper type and rated fuse.

3.3.21 Non-current-carrying metal parts of electrical equipment shall be properly grounded to prevent buildup of static electricity and allow capacitive voltage to discharge.

3.3.22 When operating or closing a disconnect switch, personnel shall remove all jewelry, wrist watches, etc., stand to the side of the switch and move the switch with a quick upward or downward single motion. Personnel shall turn their head away from the switch, except when wearing an arc rated

face shield (i.e., required for work on electrical equipment operated above 240 volts).

3.3.23 Tables 3.1 and 3.2, and Figure 3.4 shall be used to determine the safe distance for personnel working near energized electrical equipment. See PDI 30.0 for more information.

Nominal Phase-to-Phase Voltage, kV	Minimum Safe Distance from Live Parts			
	To Worker		To Parked Vehicle	
	cm	inches	cm	inches
0.48	31	12	62	24
2.4, 4.16, 13.8	61	24	122	48
34.5	92	36	153	60
69	107	42	214	84
115	122	48	244	96
230	153	60	244	96

Table 3.1 Minimum Distance from Exposed Live Parts

Nominal Phase-to-Phase Voltage, kV	Conditions *					
	A, B		C		D	
	Clear Working Space					
	cm	inches	cm	inches	cm	inches
0.48	92	36	107	42	122	48
2.4	92	36	122	48	153	60
4.16	122	48	153	60	183	72
13.8	153	60	183	72	275	108
34.5 and 69	183	72	244	96	305	120
115 and 230	244	96	305	120	366	144

* Conditions as shown in Figure 3.4

Table 3.2 Minimum Clear Working Space

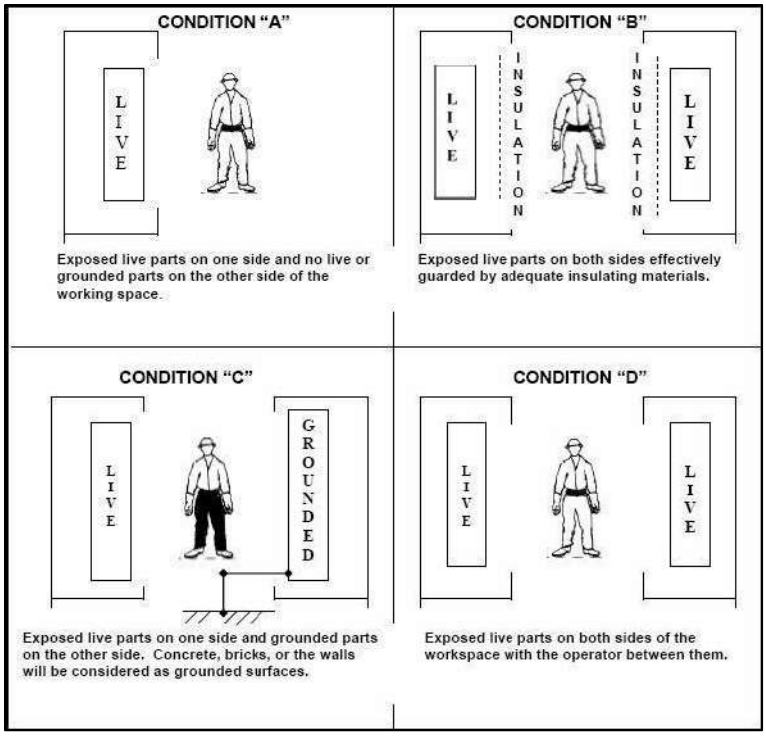

Figure 3.4 Working Conditions Near Exposed Live Parts

3.3.24 Vehicles shall not be allowed to pass over exposed cables, unless the cables have been adequately protected.

3.3.25 Confined space entry shall be per GI 2.100 and shall not be permitted until the atmosphere inside has been tested for hazardous atmospheres and is found to be safe. See Chapter I-6, *Confined Spaces*.

3.3.26 Work platforms and mobile equipment used near energized electrical equipment shall be properly grounded. See Figure 3.5.



Figure 3.5 Grounded Work Platform

3.4 Temporary Electrical Installations

3.4.1 Temporary electrical system installations shall conform to NFPA 70, *National Electrical Code (NEC)*.

3.4.2 Installation of temporary electrical equipment shall be performed by, or under the direction of, an authorized/certified electrician in accordance with SA requirements and the NEC.

3.4.3 Prior approval shall be obtained from the relevant SAPO before connecting temporary electrical installations to existing installations.

3.4.4 Receptacles shall not be connected to the same circuits that supply temporary lighting.

3.4.5 Ground-fault protection devices (e.g., RCDs, ELCBs, GFCIs) shall be provided for all temporary wiring installations.

3.5 Hazardous (Classified) Locations

3.5.1 Electrical wiring and equipment used in electrically classified (hazardous) areas shall be designed and installed per NEC requirements for the specific service required.

3.5.2 Electrical equipment shall be rated (e.g., intrinsically safe) as required for the specific electrical classification of the hazardous area. See Chapter II-11, *Hand Tools and Power Tools*.

3.5.3 Electrical equipment shall not be used in electrically classified locations, unless it is marked to show the class, group, and operating temperature for which it is approved.

3.5.4 Metal conduits in electrically classified (hazardous) locations shall be threaded, made wrench tight, and sealed as required.

3.6 Work on Live Electrical Equipment

3.6.1 Work shall not be performed on energized electrical equipment, unless de-energizing the equipment is not feasible (e.g., measuring voltage, switching, hot phasing, troubleshooting).

3.6.2 Work on energized electrical equipment shall be limited to one electrical phase at a time.

3.6.3 When conducting electrical work on energized electrical equipment, if the arc flash incident energy exceeds 40 cal/cm^2, the equipment must be put in an electrically safe work condition or recommended arc flash mitigation control strategies as listed in Supplement 2.721-1, Specific Examples of Arc Flash Hazard Mitigation Controls, shall be used to lower incident energy to 40 cal/cm^2 or less. When conducting electrical work on energized

equipment, the PPE arc thermal protective value (ATPV) must exceed the arc flash incident energy determined by the arc flash analysis.

3.6.4 At least one member of each crew authorized to work on energized electrical equipment shall have successfully completed first aid/basic life support (BLS) training courses.

3.6.5 Work permits shall be obtained prior to commencing work on live equipment per GI 2.100.

3.6.6 Before beginning work on live equipment, the risk of exposure to shock and/or arc flash shall be mitigated through the use of the Saudi Aramco hierarchy of controls as required in the Saudi Aramco Safety Management System (SMS), Element 2, "Risk Assessment and Management." The use of PPE shall be considered a last resort.

3.6.7 Personnel shall not work alone on energized electrical equipment, except as permitted by PDI 34.0.

3.7 Work Near Overhead Power Lines and Underground Cables

3.7.1 The applicable SAPO shall be contacted at the planning stage of any job that involves approaching overhead power lines or digging near underground cables. Their input/approval shall be sought on issues such as, but not limited to, work permit requirements, route and depth of any underground cables, hand digging requirements, and required safe clearances.

3.7.2 Overhead power lines

A. Overhead power lines shall be rerouted away from construction work or placed underground, if possible.

B. Movement of drilling rigs, cranes, or heavy equipment near or under overhead power lines shall be coordinated with the SA Power Operations Department as per GI 2.702.

C. Clearance distances shall be agreed upon beforehand with the SA Power Operations Dept. See PDI 30.0 for guidance.

D. Overhead power lines shall be protected per GI 2.702 by barriers and/or timber/wire "goal posts" to maintain required clearances. See Figure 3.6.

E. Access below overhead power lines shall be restricted by barriers where the "goal posts" are located. See Figure 3.6

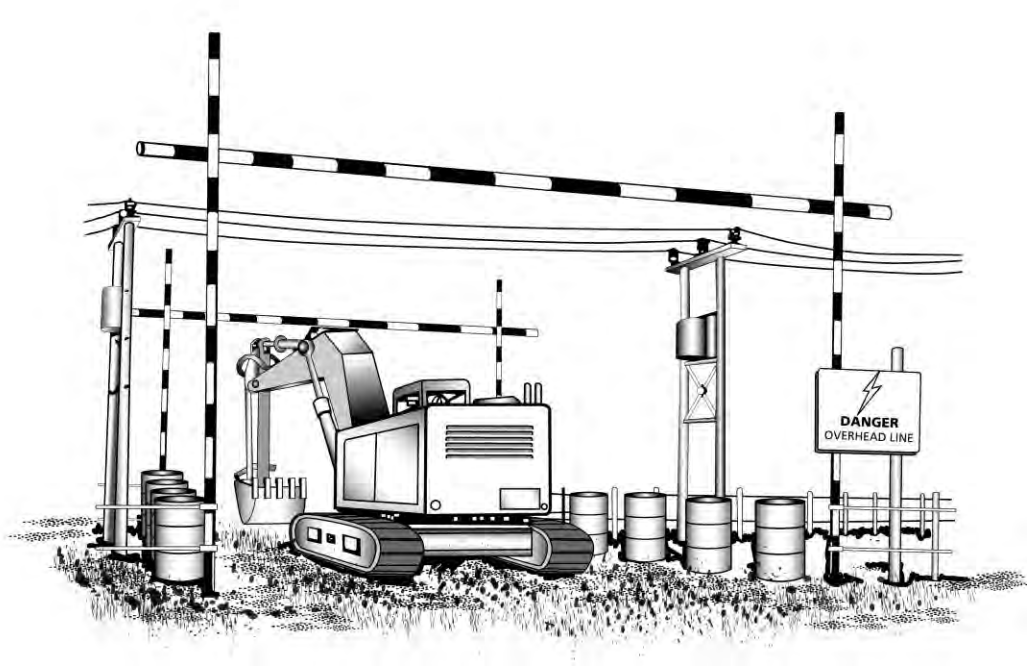

Overhead power lines are usually noninsulated and any metallic object coming near or in contact with them can be hazardous, as high voltage electricity can arc across large distances. Overhead lines shall be rerouted, "made dead" or protected by timber "goal posts" and barriers. Clearance distances shall be agreed upon prior to beginning work.

Figure 3.6 Temporary Crossing for Construction Equipment

3.7.3 Underground cables

A. In an area where an underground power cable(s) is known or suspected, the location of the underground cable(s) shall be accurately marked before excavation activities begin. The SAPO shall contact SA POD and request them to accurately mark the location of any underground power cables as required. See Chapter II-1, *Excavations and Shoring*.

B. Work permits for excavation activities near an underground cable(s) shall have an appropriate Pre-Excavation Checklist completed at site and shall be countersigned by POD as applicable and as per GI 2.100.

C. Mechanical excavators shall not be used near underground cables until after test excavations have been hand dug and the underground cable locations visibly established. Mechanical excavators shall not work within 3 m (10 ft) of any underground utility cable.

D. Any underground cable that is exposed during excavation work shall be assumed to be energized and not to be repositioned or moved until it has been verified to be de-energized by an authorized/certified electrician using an approved potential tester.

E. Exposed cables in open excavations shall be properly supported and the area barricaded.

F. Any damage to cables during excavation/work activities shall be immediately reported to the SAPO.

3.8 Work on Overhead Power Lines

3.8.1 Initial inspections, tests, or determinations:

A. Existing conditions shall be determined before performing work on overhead power lines. Conditions shall include, but not be limited to: status of energized lines and equipment, condition of poles, and location of circuits and equipment (including power and communication lines).

B. Operating voltage of overhead power lines and equipment shall be verified prior to performing work on or near energized parts in order to determine proper work methods, clearances, and equipment to be used.

C. Electrical equipment and lines shall be considered energized, until determined to be de-energized by testing for potential and grounds applied by an authorized/certified electrician.

D. When cranes or heavy equipment are used near energized overhead power lines, no part of the crane, boom, mast, gin poles, or machinery shall be permitted within the distance shown in Table 3.3.

Overhead Power Line Voltage		**Required Clearances for Equipment Operating Around Energized Overhead Power Lines**	
Min kV	**Max kV**	**ft**	**m**
0	50	10	3.1
50	200	15	4.6
200	350	20	6.1
350	500	25	7.6

Table 3.3 Absolute Limit of Approach for Equipment Working near Energized Overhead Power Lines

3.8.2 De-energizing lines and equipment

A. The work permit and isolation requirements of GI 2.100 and GI 6.012 shall be followed. All circuits shall be identified and properly isolated per GI 6.012 (i.e., disconnected from all power sources, locked, tagged, cleared, and energization attempted to prove effectiveness). Locks and hold tags shall be used to prevent the circuits from being inadvertently energized.

B. Electrical power equipment and circuits shall be checked for potential after isolation and protective grounds shall be applied by an authorized/certified electrician.

C. Guards or barriers shall be erected near adjacent energized overhead power lines. See Section 3.7.2.

D. Before performing work on an existing overhead power line, clearance shall be given to the crew by the SA POD power dispatcher as per PDI 11.0. Multiple crews may work under a single clearance only if all crew leaders agree and only in situations where no additional hazardous condition exists.

E. Upon completion of work on de-energized lines or equipment, the crew leader shall confirm that all members in their crew are clear and that the protective grounds have been removed. They shall then release their clearance to the proper authority.

3.8.3 All heavy equipment/vehicles shall be grounded as soon as they are positioned near overhead power lines for any type of work.

3.8.4 Properly grounded lighting sufficient to cover the entire work site shall be provided when working at night.

3.8.5 When performing work on, over, or near water, suitable PPE including life vests shall be worn. Life rings, ropes, and at least one skiff shall be provided. See Chapter IV-2, *Marine Operations*.

3.8.6 Live-Line Tools

A. Only SA POD approved "hot sticks" (see Figure 3.7) and integral poles that are part of a grounding set shall be used to install and remove grounding cables. Hot sticks shall have a valid test date marked on them.

B. Bare or gloved hands shall not be used to connect ground clamps to phase or neutral conductors.

C. Only live-line tools having a manufacturer's certification for the intended use shall be used.

D. Live-line tools shall be visually inspected and wiped clean before each use. Defective tools shall not be used and shall be immediately removed from the job site.



Figure 3.7 Use of a Hot Stick

3.8.7 Power Line Material Handling

A. Truck loads shall be properly secured to prevent displacement during pole-hauling operations. A red flag shall be displayed at the trailing end of the longest pole.

B. When hauling poles at night, illuminated warning devices shall be attached to the trailing end of the longest pole and the hauling truck brake lights shall be clearly visible.

C. Precautions shall be implemented to prevent blocking of roadways or endangering other traffic.

D. Prior to unloading poles, cross arms, etc., the load shall be thoroughly examined to determine if the load has shifted, binders or stakes have broken, or the load is otherwise dangerous to unload.

E. No materials or equipment shall be stored under energized lines or near energized equipment.

3.8.8 Lifting a Load

A. Crane lifts shall be per GI 7.024 and/or GI 7.028, as applicable. See Chapter III-7, *Cranes and Lifting Equipment*.

B. Only slings with valid inspection stickers shall be used to hoist loads (see GI 7.029). The hoist rope shall not be wrapped around the load. See Chapter III-8, *Slings and Rigging Hardware*.

C. Outriggers and pads shall be properly used during lifts.

D. Nonconductive tag lines or other suitable devices shall be used to control loads while being lifted.

3.8.9 Grounding for Protection of Workers

A. Grounding devices shall be inspected for loose connections, broken conductor strands, damaged insulation, etc., prior to each use. Care shall be taken to ensure that ground clamps and connections are clean, tight, and secure. Defective grounding equipment shall not be used.

B. Electrical equipment operated at 1,000 volts and higher shall be disconnected from all sources of power, potential tested (see Figure 3.8) as per PDI 10.1 and properly grounded as per PDI 50.0.

The following insulated multistrand, extra-flexible copper grounding cables and clamps are recommended for use by technicians for the stated applications or similar:

- 2/0 AWG conductor size for personal grounds to be used for grounding live and dead front pad mount transformer primaries, and grounding distribution lines.

- 4/0 AWG conductor size for portable grounds to be used for:
  - Grounding substation and switchgear bus bars.
  - Permanent installation for ground and test buggies.

- Grounding clamps must be Type 1, Class A or B, with a minimum electrical rating of 25,000 amp fault current –15 cycles at 60 Hz.

C. Workers checking for potential and installing grounding devices shall ensure that other workers are at a safe distance away from the grounding devices. The apparatus shall be grounded before contacting a conductor.

D. Circuits shall be considered as grounded when all phases are connected together and to ground. Grounding cables should be installed as close as practical to where the work is to be performed or at least in the line of sight from where the work is being performed. See Figure 3.9.

E. Jumpering and grounding cables shall be as short as practical.

F. When several grounding points are available, preference shall be given in the following order (provided grounding leads are long enough to reach them):

- Substation ground grid.
- Grounded primary neutral.
- Steel tower or pole ground.
- Anchor ground rod.
- Driven ground rod.

G. If the work is to be performed at more than one location in a line section, the line section shall be grounded and short circuited at each end of the line

section. The conductor being worked on shall be grounded at each work location.

H. Grounds applied to a power distribution system, whether part of a switching program or a personal ground connected by a clearance holder, shall have a hold tag attached to them. The hold tag shall identify the installer's name, date, equipment, purpose, and the hold order number assigned to the isolation.

I. Elevating/lifting equipment (e.g., bucket trucks, digger-derricks, boom trucks) and scaffolding shall be grounded prior to work activities on overhead power lines.

J. Feedback from transformers, generators, motors, high-voltage lines, etc., that cross near a de-energized line shall be considered a source of energy.

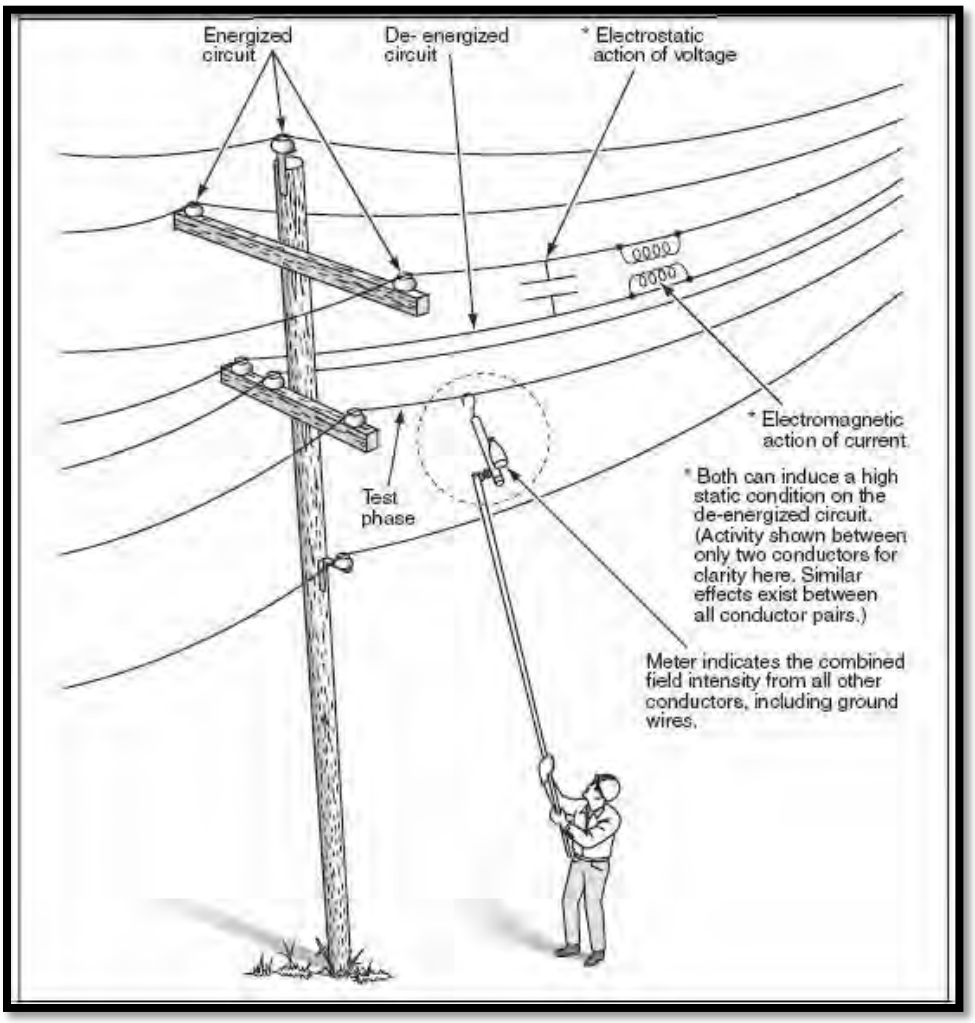

Figure 3.8 High-Potential Testing

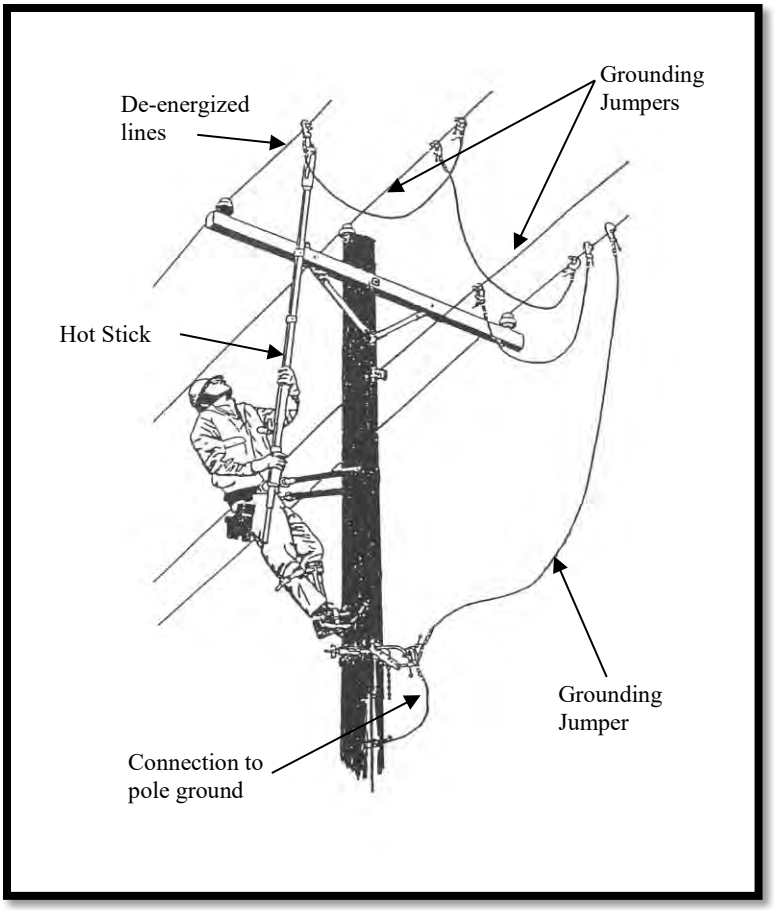

Figure 3.9 Proper Grounding

3.8.10 Overhead Line Activities

A. Unsafe poles or structures shall not be climbed until made safe by guying, bracing, or other adequate means. See Figure 3.10.

B. No workers shall be at an elevation where they could fall more than 1.8 m (6 ft) without using proper fall protection (e.g., full body harness and shock absorbing lanyard), except during pole climbing when a safety belt and climbing spurs designed for climbing can be used. See Chapter II-5, *Fall Protection*, and PDI 40.0.

C. Contact with energized lines or equipment shall be avoided when using cranes, derricks, gin poles, A-frames, or other mechanized equipment. See GI 2.702 and PDI 30.0.

D. Employees standing on the ground adjacent to energized lines or equipment shall avoid contacting equipment or machinery, unless using appropriate protective equipment.

E. During framing operations, employees shall not work under a pole or structure suspended by a crane, A-frame, or similar equipment.

F. Pole holes shall not be left unattended or unguarded.

G. Tag lines shall be nonconductive when used near energized power lines.

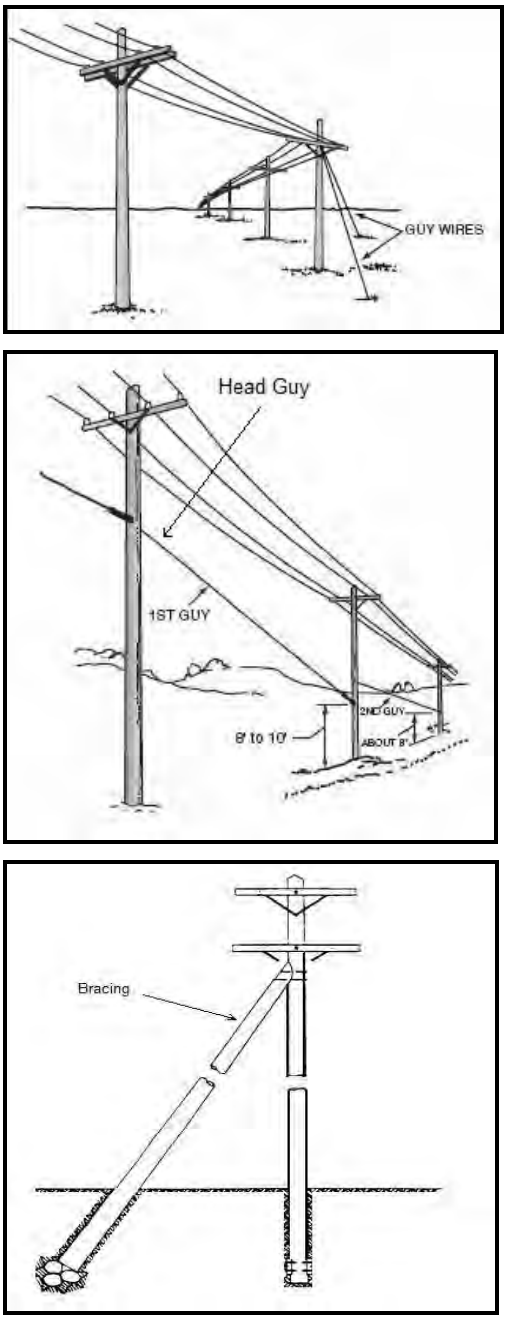

Figure 3.10 Stabilization by Guying or Bracing

3.8.11 Metal Tower Construction

A. When working in unstable soil, excavations (e.g., for pads or pile-type footings) in excess of 1.2 m (4 ft) deep shall be either sloped to the

maximum allowable slope (angle of repose), benched, or shored if entry is required. Ladders shall be provided for access to pad or pile-type footing excavations in excess of 1.2 m (4 ft) deep. See Chapter II-1, *Excavations and Shoring*.

B. When working in unstable soil, provisions shall be made to clean auger-type footings without requiring personnel entry, unless properly designed shoring is used to protect personnel.

C. A designated spotter wearing a fluorescent vest shall direct mobile equipment to its specific work location when performing work adjacent to footing excavations.

D. Personnel shall not be permitted to remain in a footing while equipment is being spotted for placement.

E. The work location shall be graded and leveled to ensure the stability of mobile heavy equipment.

F. Traffic control shall be maintained when crossing highways or railways.

G. Personnel shall be protected from falling objects during tower assembly.

H. Members and sections being assembled shall be adequately supported. Guy lines shall be used as needed to maintain sections or parts of sections in position and to reduce the possibility of tipping.

I. Personnel shall not be permitted under a tower being erected or assembled.

J. Tag lines shall be utilized to maintain control of tower sections being raised and positioned, except where the use of such lines would create a greater hazard.

K. The load line shall not be detached from a tower section until the section is adequately secured.

L. Erection work shall be discontinued during high winds or other adverse weather conditions. See Chapter III-7, *Cranes and Lifting Equipment*. For emergency restoration, a procedure shall be developed with required special precautions that take into account these conditions.

M. Operations shall be discontinued during the presence of lightning.

3.8.12 Stringing/Removing De-energized Conductors

A. Prior to stringing operations, a safety meeting shall be conducted covering the plan of operation, type of equipment to be used, grounding devices, procedures to be followed, crossover methods to be employed, clearance authorization required, etc.

B. When the existing line has been de-energized, proper clearance authorization shall be obtained and the line grounded on both sides of the crossover. The line being strung or removed shall be considered energized.

C. Conductors being installed or removed shall be properly grounded where there is a possibility of the conductor contacting an energized circuit or receiving a dangerous induced voltage buildup.

D. When crossing over energized conductors in excess of 600 volts, rope nets or guard structures shall be installed unless provision is made to isolate or insulate personnel or the energized conductor. Where practical, automatic reclosing features of circuit interrupting devices shall be made inoperative. In addition, the line being strung shall be grounded on either side of the crossover and worked on as if energized.

E. Conductor stringing or removal shall be kept under positive control by the use of tension reels, guard structures, tie lines or other means to prevent incidental contact with energized circuits.

F. The manufacturer's load rating shall not be exceeded for stringing lines, pulling lines, sock connections, and load-bearing hardware and accessories.

G. Pulling lines and accessories shall be inspected regularly and immediately removed from the job site if defective.

H. Personnel shall not be permitted to be directly under overhead operations or on the cross arm while a conductor or pulling line is being pulled (in motion).

I. Transmission clipping crews shall have a minimum of two structures clipped in between the crews and the conductor being sagged. Clipping and tying crews shall work between grounds at all times when working on bare conductors. Grounds shall remain intact until the conductors are clipped in, except on dead-end structures.

J. Work from structures shall be discontinued during high winds or other adverse weather conditions. For emergency restoration, a procedure shall be developed with required special precautions that take into account these conditions.

K. Stringing and clipping operations shall be discontinued during the presence of lightning.

L. Reel handling equipment, including pulling and braking machines, shall have sufficient capacity, operate smoothly, and be leveled and aligned in accordance with the manufacturer's operating instructions.

M. Reliable communications between the reel tender and pulling rig operator shall be provided and used.

N. Each pull shall be snubbed or dead ended at both ends before subsequent pulls.

3.8.13 Stringing Adjacent to Energized Lines

A. Tension stringing methods, or other methods that prevent contact between personnel and the lines being pulled, shall be used when stringing adjacent to energized lines.

B. Pulling and tensioning equipment shall be isolated, insulated, and effectively grounded.

C. Bare conductors and overhead ground conductors shall be grounded at the first tower adjacent to both the tensioning and pulling setup, at all dead-end/catch-off points and in increments so that no point is more than 3.2 km (2 miles) from a ground.

D. Grounds shall be placed and removed with a SA POD-approved hot stick, except for moving-type grounds.

E. Grounds shall be located at each side and within 3 m (10 ft) of working areas where conductors or overhead ground conductors are being spliced at ground level. The two ends to be spliced shall be bonded to each other.

F. Grounds shall not be removed until after the work is complete and provided the line is not left open-circuited at the isolated tower.

3.9 Work Inside Substations

3.9.1 When work is to be performed inside an existing SA substation, prior authorization shall be obtained from the SAPO and the proper work permit(s) shall be issued as per GI 2.100.

3.9.2 Barricades (e.g., warning tape and signs) shall be installed to prevent unauthorized personnel from entering the work area and to prevent workers from making unintentional contact with energized equipment.

3.9.3 Precautions shall be taken to prevent unintentional operation of relays or other protective devices due to jarring, vibration, or improper wiring.

3.9.4 Personnel entering substations for any reason are required to wear arc rated clothing) as required by GI 2.721.

3.10 Substation Yard Fences

3.10.1 Temporary substation yard fences shall be provided whenever permanent substation yard fences are expanded or removed for construction purposes.

3.10.2 Temporary and permanent fences shall be properly grounded.

3.10.3 Gates to substations yards shall be kept locked, except when work is being performed.

4. Pressure Testing

4.1 Purpose

This chapter describes minimum safety requirements for conducting pressure testing of equipment and piping.

4.2 References

Saudi Aramco (SA) General Instructions (GIs):

GI 2.100, *Work Permit System*

GI 2.102, *Pressure Testing Safely*

GI 2.710, *Mechanical Completion and Performance Acceptance of Facilities*

GI 430.001, *Waste Management*

SA Engineering Standards (SAESs):

SAES-A-004, *General Requirements for Pressure Testing*

SAES-A-005, *Safety Instruction Sheet*

SAES-A-007, *Hydrostatic Testing Fluids and Lay-Up Procedures*

SAES-J-901, *Instrument Air Supply Systems*

SAES-L-150, *Pressure Testing of Plant Piping and Pipelines*

SA Engineering Procedures (SAEPs):

SAEP-310, *Piping and Pipeline Repair*

SAEP-311, *Installation of Hot Tapped and Stopple Connections*

SAEP-318, *Pressure Relief Valve Program Authorization for Installation, Deletion and Changes*

SAEP-319, *Pressure Relief Valves – Routine Test, Inspection, Quality Assurance and Regulation*

SAEP-327, *Disposal of Wastewater from Cleaning, Flushing and Dewatering Pipelines and Vessels*

SAEP-1160, *Tracking and Reporting of Welding, NDT and Pressure Testing for Capital Projects*

4.3 General Requirements

4.3.1 Appropriate work permits shall be issued for pressure testing and associated work in accordance with GI 2.100 and Chapter I-4, *Work Permit System*, of this manual.

4.3.2 Pressure testing and associated work shall be performed in accordance with GI 2.102 and the approved pressure test procedure (see Section 4.4), which if required shall be delivered to the job site at least two days prior to the test.

4.3.3 The "Checklist for Pressure Testing Safely" per GI 2.102 shall be completed before, during and after the test. This checklist shall be kept on-site with the work permit.

4.3.4 Material Safety Data Sheets (MSDSs) and/or Chemical Hazard Bulletins (CHBs) shall be reviewed for all chemicals handled during pressure testing activities (e.g., corrosion inhibitors, bactericides, chlorine compounds, oxygen scavengers) and the stated precautions shall be followed.

4.3.5 For pressure tests performed by a contractor for a capital (construction) project at a SA facility, the contractor shall submit a Pressure Test Package to the SA proponent organization (SAPO) in accordance with SAEP-1160. This Pressure Test Package shall be to the satisfaction of the SA Inspection Department project representative prior to commencing the pressure testing.

4.3.6 Appropriate personal protective equipment (PPE) shall be worn by pressure test personnel per Chapter I-3, *Personal Protective Equipment (PPE).* Additional PPE shall be worn to protect against exposure to hot liquids above 49 °C (120 °F) or to hazardous chemicals that may be used during testing.

4.3.7 Only personnel involved with the pressure test shall be allowed near the system at any time during the test.

4.3.8 Hazardous gases or vapors shall be vented clear of any area where personnel are working or where there is a possible source of ignition.

4.3.9 Sufficient vent relief capacity shall be provided to ensure vessels cannot be subject to a vacuum during the draining of test fluid or by sudden cooling.

4.3.10 Ancillary equipment not being pressure tested shall be disconnected or blinded. If isolation valves are used in lieu of blinds, satisfactory provisions (e.g., double block and bleed) shall be made to ensure that no overpressure can occur in equipment that is not being tested, due to possible valve leak.

4.3.11 Adequate restraints shall be installed prior to testing to restrict movement of piping and joints during the testing.

4.3.12 Test pumps shall be attended at all times while in operation, unless isolated from the system.

4.3.13 Air shall not be used to displace test fluids from underwater equipment, unless it has been verified that the equipment will not float.

4.3.14 Before a pressure test is performed, the SAPO shall be requested to inspect the system to be tested (e.g., to verify compliance with the approved test procedure and the completed "Checklist for Pressure Testing Safely").

4.3.15 SA Inspection Department and SAPO representatives reserve the right to monitor major pressure tests including, but not limited to, tests on pipelines such as cross-country pipelines, submarine pipelines, flowlines, trunklines, water injection pipelines and gas-lift pipelines, pressure vessels, in-plant piping and power boilers.

4.3.16 Once the test is completed, the tested system shall not be left unattended unless unavoidable. If the system being tested must be left unattended, then the vent(s) shall be kept open to prevent temperature changes from causing an overpressure or vacuum in the system.

4.3.17 To prevent possible overpressure due to thermal expansion, test relief valves shall remain installed until the test liquid has been completely drained.

4.3.18 Lines and equipment shall be drained and cleaned in accordance with SAES-A-007 before they are returned to service.

4.4 Pressure Test Procedures

4.4.1 Written test procedures in accordance with GI 2.102 shall be developed, approved and provided to all concerned personnel at least two days prior to the test and be maintained at the work site.

4.4.2 Written pressure test procedures are not mandatory for tests on household utilities, irrigation sprinkler systems, and low pressure, pneumatic leak tests on reinforcing pads and the annuli of weld-plus-end couplings per SAEP-310. For these tests, test equipment and procedures shall be selected by personnel responsible for the test.

4.4.3 The following minimum information per GI 2.102 shall be included in the pressure test procedure:

Prior to Testing/Preparation Steps:

A. Related safety instruction sheets.

B. Pressure test diagrams or hydrostatic test diagrams.

C. Test manifold arrangement.

D. A "blind list" showing locations of blind flanges and any isolation valves (numbered in order of installation).

E. Locations of check valves (flappers should be removed, if necessary, prior to testing).

F. Use of properly rated gaskets and verification of compliance with the manufacturer's rating specifications (e.g., quality, service use, pressure rating) for all gaskets used.

G. Location(s) of the lowest-rated component(s) that determine the test pressure.

H. Locations of air vents, if appropriate.

I. Location of filling point(s).

J. Vacuum valve sizes and set pressures, if any.

K. Relief valve sizes and set pressures.

L. Test pressures.

M. Test mediums and any chemical additives.

N. Any special support requirements to sustain the weight of the test liquid.

O. Barricade locations to prevent unauthorized personnel entry.

P. Safe clearance distances for personnel performing the test.

Q. Locations of warning signs and markings for the test areas.

R. Lift plans (as required).

<u>During Testing/Execution:</u>

A. Inspection requirements, including a general site inspection (can be part of the work permit joint site inspection).

B. PPE required, including additional or special PPE.

C. Job execution steps:

1. Required work permits.
2. Site preparation.
3. The test sequence, ensuring gradual increase in test pressures.
4. Intervals and duration of pressure increase (e.g., hold every 100 psi for 10 minutes before next increase), which shall be recorded during the test.

5. Points/pressures at which inspection personnel can approach equipment to perform required inspections.
6. Minimum temperature allowed, if appropriate.
7. Listing of correct sequence and necessary torque of all blind flange bolts and a requirement to verify proper torque when bolting.

D. Contingency/emergency plans.

E. Emergency communication requirements and methods.

After Testing/Site Restoration:

A. Disposal methods of test medium.

B. Steps for removal of blind(s) per the "blind list."

C. Site cleanup and dewatering requirements.

D. Communication requirements of task completion (e.g., notification of shift superintendent).

4.5 Test Medium

4.5.1 Water shall be the pressure-test medium, except as identified in SAES-A-004.

4.5.2 Use of seawater or similar high-salinity water as the test medium shall be in accordance with SAES-A-007, including prior written approval from the SAPO.

4.5.3 To avoid corrosion and possible resulting failures from hydrostatic test water, the requirements of SAES-A-007 for chemical treatment and selection of hydrostatic test water shall be followed.

4.5.4 Type 300-series stainless steels shall be tested only with water that has very low chloride content per SAES-A-007 in order to avoid pitting and stress corrosion cracking.

4.5.5 Hydrostatic testing shall be used whenever possible. When pneumatic testing must be conducted, it shall be as specified in SAES-A-004, including the written approvals required.

4.5.6 When pressure testing air supply and/or air distribution systems, dry instrument air or inert gas shall be used as the test medium. Hydrostatic testing of instrument air piping is not permitted.

4.5.7 Air shall not be used as a pressure-test medium in systems that contained hydrocarbons, unless the system has been cleaned and purged to avoid an explosive hydrocarbon-air mixture.

4.5.8 Steam shall only be used as a pressure-test medium in tightness tests and service tests.

4.5.9 Approved written procedures per the requirements of SAEP-327 shall be followed for proper disposal of pressure-test mediums containing chemical additives.

4.5.10 Test fluids shall be piped or drained to designated sewer drains or other locations (e.g., approved pits or lined evaporation ponds).

4.6 Test Equipment

4.6.1 Appropriate test equipment shall be used to ensure controlled pressure increases, no overpressure and safe depressurization.

4.6.2 Relief valves shall be properly located in the system to be tested, including near the test pump. Relief valves shall be tagged with the following information: the word "TEST", the set pressure and a valid test date.

4.6.3 Vents of adequate capacity shall be installed at high points to vent air/gas while the system is being filled with the test liquid.

4.6.4 Drains shall be installed at suitable locations to allow removal of the test liquid.

4.6.5 Block valves shall be used on the test pump lines to the equipment under test.

4.6.6 Block valves shall not be used on a relief valve's inlet or outlet, except if the relief valve is to be installed on an existing valve connection and removing the valve is not practical because of fluid in the system. This valve may be on the relief valve's inlet, provided it is sealed open during the test.

4.6.7 Two or more accurate and reliable pressure gauges, with block-and-bleed valves to permit safe replacement of the gauges if necessary, shall be used. One gauge shall be located in the test piping such that it can be read by the pump operator. The other gauge(s) shall be located in the system under test. Pressure gauges shall be mounted in the upright position.

4.6.8 Pressure gauges shall be calibrated within 30 days prior to the test. Maximum test pressure range shall be between 30-80% of the full range.

4.6.9 Hoses connecting test pumps to manifolds shall be rated for the test pressure and shall be fitted with safety chains or equivalent means strong enough to prevent whipping in case the coupling becomes disconnected.

4.6.10 Readily accessible blowdown valve(s) for draining test fluids and depressurizing the test piping shall be provided.

4.6.11 Pressure-testing manifolds, either for permanent or temporary usage, shall be tested separately from any other piping prior to use with system testing. Manifolds shall be designed for and tested to a pressure not less than 20% above the maximum test pressure to be applied on the system to be tested, except for the final connection between the test manifold and the system under test, which may be designed for and tested to the maximum system test pressure where a higher pressure is not feasible.

4.7 Prevention of Overload from Weight of Liquid

4.7.1 Supports, vessels, piping and foundations shall not be overloaded by the weight of a test liquid. Overload shall be prevented by combining hydrostatic and pneumatic tests for columns and/or providing temporary supports, where necessary.

4.7.2 Prior to the start of any test the SA Consulting Services Department (CSD) shall be consulted, if necessary, to ensure that the system to be tested can withstand the weight of the test liquid.

4.8 Site Access Control

4.8.1 Test areas shall be marked and barricaded. Warning signs shall be posted to alert approaching personnel (e.g., "Do Not Enter—Testing In Progress").

4.8.2 Personnel shall be posted to keep the test area clear of unauthorized personnel, as necessary.

4.8.3 Test pumps, if any, shall be located so that the pump operators will not be exposed to danger in the event of failure.

4.9 Air Removal

4.9.1 Air shall be removed through vents at high points while the system is filled at the low point (to reduce the amount of stored energy in the test) when a liquid is the test medium.

4.9.2 In pipelines equipped with scraping facilities, air removal can be achieved by using scrapers to displace air with liquid.

4.10 Pressure Rise Control

4.10.1 During pressure tests, pressure rises shall be gradual and under control to allow time for material to strain and for personnel to check for leaks. See SAES-A-004 and GI 2.102.

4.10.2 The following pressures shall not be exceeded until any weaknesses have been repaired and leaks have been stopped:

A. Strength tests using a liquid test medium: 50% of the strength test pressure.

B. Any tests using air or other gas as a test medium: 173 kPa (25 psig) or 50% of the strength test pressure, whichever is the lower value.

4.10.3 After preliminary checks for leaks at the above pressures, the pressure shall be increased in steps with at least a 10 minute hold at each step to permit inspection for leaks and weaknesses.

4.10.4 In strength tests using air or other gas as the test medium, the pressure shall be increased in steps no greater than 10% of the strength test pressure after reaching 50% of the test pressure.

4.10.5 In strength tests using a liquid as the test medium, the pressure shall be increased in steps no greater than 20% of the strength test pressure after a preliminary check at 50% of the strength test pressure.

4.10.6 Do not proceed to a higher pressure after each of the above steps until weaknesses have been repaired and leaks have been stopped.

4.11 Depressurization

4.11.1 Working on a system while it is under pressure is very hazardous because a failure could be initiated by the work due to the addition of stresses in the material. Therefore, the system being tested shall be depressured (with the exception of pressure due to a liquid head) before any work is performed to stop leaks or repair weaknesses, including the tightening of bolts.

4.11.2 Upon test completion, the system shall be emptied in such a way as not to cause vacuum and collapse (e.g., a liquid test medium shall be drained from the system slowly and with vents open).

4.11.3 Systems shall not be depressurized by loosening bolts in a flange or by unscrewing fittings.

5. Ionizing Radiation

5.1 Purpose

This chapter describes minimum requirements for protection of personnel using ionizing radiation equipment, except for non-destructive testing (NDT). This includes medical and dental X-ray machines, other medical diagnostic equipment and analytical X-ray generating equipment.

5.2 References

Saudi Aramco (SA) General Instructions (GIs):

GI 6.001, *Notification Requirements for Incidents (Including Fires)*

GI 6.003, *Incident Investigation*

GI 150.003, *Ionizing Radiation Protection*

GI 150.005, *Ionizing Radiation Protection Requirements for Medical Radiation Producing Equipment*

GI 150.006, *Ionizing Radiation Protection Requirements for Analytical X-ray Equipment*

GI 150.007, *Ionizing Radiation Protection Handling Unsealed Radioactive Sources and Contamination Control*

SA Engineering Procedures (SAEPs):

SAEP-358, *Management of Technologically Enhanced Naturally Occurring Radioactive Material (NORM)*

SAEP-370, *Transportation of Radioactive Material*

SAEP-1141, *Radiation Protection for Industrial Radiography*

5.3 General Requirements

5.3.1 Work with ionizing radiation shall not be undertaken without a Saudi Arabian Government issued Radiation Practice License.

5.3.2 Use of ionizing radiation equipment shall be per GI 150.003, GI 150.005, GI 150.006 and GI 150.007, as applicable.

5.3.3 All work with ionizing radiation shall be performed under the control of an appointed Radiation Protection Officer (RPO).

5.3.4 The normal radiation exposure of individuals resulting from an authorized practice or a combination of authorized practices shall be as low as

reasonably achievable and restricted so that no applicable dose limit is exceeded per GI 150.003 and SAEP-1141.

5.3.5 No employee shall be permitted to use/operate ionizing radiation equipment without being adequately trained and competent in the safe use and handling of ionizing radiation sources related to their job responsibilities.

5.3.6 Employees shall be provided with and use the necessary personal monitoring and protection measures (e.g., personal protective equipment) while using/handling ionizing radiation equipment.

5.3.7 Radiation monitoring and survey equipment shall be periodically calibrated as required by GI 150.003.

5.3.8 All portable radiation sources shall be surveyed before and after use or movement using proper and calibrated radiation survey equipment.

5.3.9 Radioactive waste shall be disposed of according to Saudi Arabian government regulations and SA standards (e.g., SAEP-358).

5.3.10 Radioactive sources shall be stored inside adequately shielded storage rooms/facilities with sufficient security measures to prevent loss or theft of radiation sources.

5.3.11 All rooms/facilities housing radiation emitting equipment shall satisfy all SA Environmental Protection Department (EPD) requirements (see Section 5.2) regarding structural, radiation shielding, penetrations, radiation monitoring, safety interlock, warning signs, etc.

5.3.12 Annual surveys and leak testing shall be performed on ionizing radiation equipment and sources.

5.3.13 Decommissioning of radioactive material facilities shall be coordinated with EPD.

5.3.14 Reporting and investigation of incidents involving radioactive sources shall be per GI 6.001, GI 6.003 and GI 150.003.

5.3.15 Laboratories containing analytical X-ray equipment shall be kept locked when not in use.

5.3.16 Unauthorized access shall be prohibited to rooms/facilities while radiation equipment is operating or during radiation source exposure.

5.3.17 X-ray equipment shall not be left unattended, unless the room/facility is locked or the equipment is secured to prevent unauthorized use.

5.3.18 Analytical X-ray equipment shall be labeled with a radiation warning sign showing the radiation symbol (see Figure 5.1) and a warning that shall

read: “CAUTION: X-RAY EQUIPMENT IN THIS ROOM PRODUCES X-RAYS WHEN ENERGIZED.”

5.3.19 X-ray technicians shall stand behind a protective barrier during exposure, except when exempted by properly approved procedures.

5.3.20 Repair and maintenance work shall not be performed on analytical X-ray equipment that could result in personnel exposure to radiation. Work shall be performed only when the power supply is completely de-energized and isolated.



Figure 5.1 Radiation Warning Sign
(see SA Standard Drawing AB-36895)

6. Non-Destructive Testing (NDT)

6.1 Purpose

The chapter describes minimum requirements for safe use, handling, storage and transportation of ionizing radiation producing equipment and materials used for industrial radiography, such as for non-destructive testing (NDT).

6.2 References

Saudi Aramco (SA) General Instructions (GIs):

GI 2.100, *Work Permit System*

GI 150.003, *Ionizing Radiation Protection*

SA Engineering Procedures (SAEPs):

SAEP-370, *Transportation of Radioactive Material*

SAEP-1140, *Qualification of Saudi Aramco NDT Personnel*

SAEP-1141, *Radiation Protection for Industrial Radiography*

SAEP-1142, *Qualification of Non-Saudi Aramco NDT Personnel*

SAEP-1143, *Radiographic Examination*

SA Contract Standard Schedule:

Schedule Q, *Project Quality Requirements*

6.3 General Requirements

6.3.1 Industrial radiography operations involving sealed radiation sources or radiation producing equipment shall not be carried out without a Saudi Arabian Government (SAG) issued Radiation Practice License.

6.3.2 All work with ionizing radiation shall be performed under the control of an appointed Radiation Protection Officer (RPO).

6.3.3 The materials and equipment used during radiographic examinations shall comply with GI 150.003 and SAEP-1143.

6.3.4 All industrial radiography shall be performed in accordance SAEP-1143. Radiographic techniques not covered in SAEP-1143 shall be submitted to the SA Inspection Department (ID) for approval prior to use.

6.3.5 Industrial radiographers shall make every reasonable effort to maintain exposure to ionizing radiation as far below the dose limits as practical. The "as low as reasonably achievable" (ALARA) principle shall be applied.

6.3.6 Protective measures in the form of engineering and administrative controls and personal protective equipment (PPE) shall be used to ensure that no individual is exposed to radiation in excess of the prescribed dose limits established in SAEP-1141 and GI 150.003.

6.3.7 Exposure areas and exposure bunkers shall be properly designed and constructed in accordance with SAEP-1141.

6.3.8 Approval for the use of exposure areas and exposure bunkers shall be obtained from the SA ID.

6.3.9 Hot work permits per GI 2.100 shall be issued for all radiographic work.

6.3.10 Controlled areas (where high levels of radiation may exist during radiographic operations) shall be barricaded and radiation warning signs shall be posted. See Chapter III-5, *Ionizing Radiation*, of this manual.

6.3.11 Access to controlled areas (high radiation areas) shall be restricted to authorized personnel only.

6.3.12 Radiographic work shall immediately stop if unauthorized personnel enter a controlled area.

6.3.13 When the minimum crew size of two radiographic technicians is not sufficient to monitor a controlled area, additional qualified technicians shall be used. Examples include, but are not limited to, radiography in upper structures at a construction site and large tank construction.

6.3.14 Appropriate lighting shall be provided to the whole controlled area when radiographic work is performed at night. The use of flashlights or other hand-held battery operated lights alone is not permitted as it is insufficient.

6.3.15 Radiography incidents shall be immediately reported and investigated per GI 150.003.

6.4 Personnel Qualifications

6.4.1 SA personnel performing radiography NDT activities shall be certified per SAEP-1140.

6.4.2 Contractor and subcontractor personnel performing radiography NDT activities shall be certified per SAEP-1142.

6.4.3 All personnel performing radiographic film interpretation (RTFI) shall be certified to Level II and have met the requirements of SAEP-1140 or SAEP-1142, as applicable. Personnel performing RTFI shall have passed the SA RTFI examination and be in possession of a valid RTFI certification card.

6.5 NDT Service Providers

6.5.1 NDT service providers shall:

A. Be approved by the SA ID.

B. Have radiation safety procedures and emergency response procedures in place. These procedures shall be reviewed and approved by the ID every six months. Upon expiration of approval, the NDT service provider shall cease radiographic work and remove personnel and equipment from SA property.

C. Have a valid SAG Radiation Practice License (license for use of radiation producing devices and material). The Radiation Practice License shall cover the devices (e.g., X-ray machine) and materials (radiation sources such as Iridium-192, Cobalt-60, Selinium-75, etc.) used.

D. Have SAG licensed RPOs approved by the ID.

E. Maintain valid SA Radiation Protection Permit(s) issued by the SA Environmental Protection Department (EPD) for the duration of the work or project.

6.5.2 NDT technicians shall:

A. Have the following radiation dosimeters and monitoring devices, as a minimum:

- Calibrated radiation survey meter
- Thermoluminescent dosimeter (TLD) or film badge
- Pocket or electronic dosimeter
- Personal radiation alarm (combined with a electronic dosimeter)

B. Have a valid SA Radiation Protection Permit issued by the SA EPD.

C. Have the appropriate PPE. See Chapter I-3, *Personal Protective Equipment (PPE).*

6.5.3 Only NDT service provider personnel covered by the SAG Practice License shall be allowed to be involved in the NDT service provider's radiographic work, including use, transport, handling or storage of radioactive sources.

6.5.4 The contractor's site safety personnel and NDT service provider's personnel shall conduct random, daily inspections without the necessity for entering the controlled area to ensure the safety of the work site.

6.6 Source Transport and Storage

6.6.1 Transportation of radioactive materials shall comply with the requirements of SAEP-370 and SAEP-1141.

6.6.2 Radiation sources shall not be transported in vehicles at speeds exceeding 90 km/h.

6.6.3 Transport vehicles shall be properly equipped for transporting radiation sources per SAEP-1141.

6.6.4 When radiation sources are used on a daily basis at a construction site, a temporary radioactive source storage facility shall be constructed to minimize transportation risks associated with the sources. Such facilities shall have a valid Temporary Radioactive Source Storage Pit Permit, which are issued by the ID for a period of 6 months.

6.6.5 The design of radioactive storage facilities (permanent and temporary) shall be per SAEP-1141.

6.6.6 Contractor's on-site storage shall include a source utilization and tracking log per SAEP-1141.

7. Cranes and Lifting Equipment

7.1 Purpose

This chapter describes methods, procedures, and responsibilities for performing standard lifts and critical lifts that involve onshore, marine, and offshore cranes operated by Saudi Aramco (SA) and/or contractor personnel.

7.2 References

SA General Instructions (GIs):

GI 2.100, *Work Permit System*

GI 2.702, *Moving Drilling Rigs, High Clearance Equipment/Loads, or Operating Cranes Under or Near Power-Lines*

GI 6.029, *Reporting and Recording of Motor Vehicle Accidents*

GI 7.024, *Marine and Offshore Crane, Hoist, and Rigging Operations*

GI 7.025, *Heavy Equipment Operator and Rigger Testing and Certification*

GI 7.026, *Crane and Heavy Equipment Incident and Investigation Reporting Procedures*

GI 7.027, *Crane Suspended Personnel Platform (Manbasket) Operations*

GI 7.028, *Crane Lifts: Types and Procedures*

GI 7.029, *Rigging Hardware Requirements*

GI 7.030, *Inspection and Testing Requirements for Elevating/Lifting Equipment*

SA *Safety Handbook*, *Minimum Safety Rules*

American National Standards Institute (ANSI)/American Society of Safety Engineers (ASSE):

ANSI/ASSE A10.28, *Safety Requirements for Work Platforms Suspended from Cranes or Derricks*

ANSI/ASSE A10.42, *Safety Requirements for Rigging Qualifications and Responsibilities*

7.3 Crane Operations (General Requirements)

7.3.1 Crane lifts shall be conducted per GI 7.024 and GI 7.028, as applicable.

7.3.2 All crane operators shall be properly licensed and certified per GI 7.025 for the crane type/model they are using.

7.3.3 Appropriate work permits shall be issued for crane operations in accordance with GI 2.100 and Chapter I-4, *Work Permit System*.

7.3.4 Crane operators shall have the final decision on crane lifts that affect the safety of the crane.

7.3.5 Cranes shall be inspected by the crane operator using form SA 9466 (see GI 7.028) prior to each shift.

7.3.6 All cranes shall have a valid crane inspection sticker issued by SA or by an SA-approved third-party inspection agency.

7.3.7 Crane cabs shall provide maximum visibility (e.g., curtains/cardboard shall not obstruct the operator's view during operation). Cabs shall be kept clean and clear of items such as rubbish and loose tools. Windows shall be kept clean at all times and shall be replaced if the glass becomes pitted, cracked, or broken.

7.3.8 All riggers shall be certified per GI 7.024 and/or GI 7.025, as applicable. Only certified riggers shall rig loads to be lifted, including transport trucks and boom trucks, with no exceptions. The rigger shall have responsibility for coordinating activities of all personnel involved with the lift. See Chapter III-8, *Slings and Rigging Hardware*.

7.3.9 Personnel with both an approved crane operator and rigger certification shall not be allowed to act in both capacities for the same lift (e.g., such a person shall not supervise/rig a lift while operating a crane).

7.3.10 Crane lifts shall not be performed in wind speeds exceeding 32 km/h (20 mph) (17.4 knots) (9 m/sec), unless otherwise specified by the crane manufacturer.

7.3.11 Crane lift areas shall be barricaded and secured. Only authorized personnel shall be permitted inside the barricaded area. Warning signs shall be placed at barricaded perimeters warning site personnel of the hazards of overhead lifting activities.

7.3.12 All cranes shall be leveled in accordance with manufacturer's specifications and shall be located on a properly compacted foundation prior to performing any lift. All cranes shall be provided with a fixed bull's-eye level and/or a carpenter's level to verify the crane is level.

7.3.13 During a lift, the crane's outriggers shall be fully extended and lowered to raise the wheels and level the crane, unless otherwise specified in the crane manufacturer's load chart. See Figure 7.1. The crane's wheels shall be raised completely off the ground (e.g., *not* as shown in Figure 7.2).

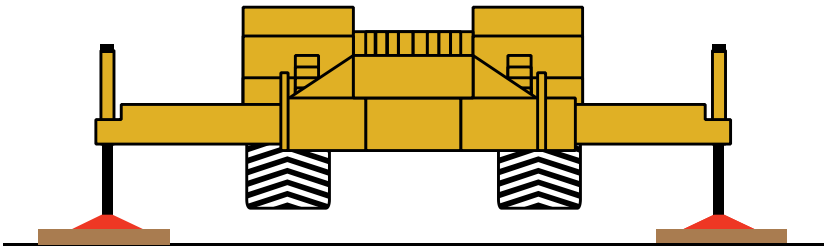

Figure 7.1 Properly Extended Outriggers

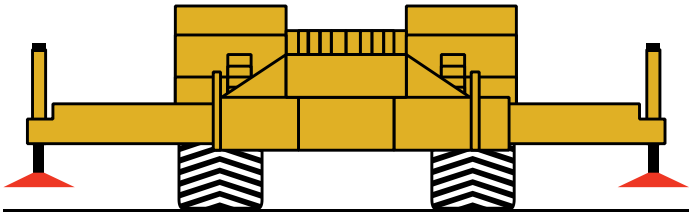

Figure 7.2 Improperly Extended Outriggers, Wheels Carrying Load

7.3.14 Outrigger mats shall be used under all crane outrigger float pads during crane lifts. See Figure 7.3. Outrigger mats shall be designed to support the total weight of the crane and load to be lifted.

7.3.15 Mats shall not be permanently secured to the outrigger pads.

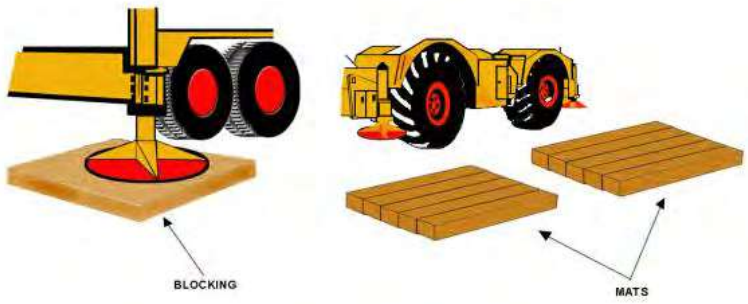

Figure 7.3 Outrigger Mats

7.3.16 Tag lines shall be used to control suspended loads, unless their use may cause a greater hazard. Tag lines shall not be tied around the hand/wrist. They shall be fully gripped by all fingers.

7.3.17 The crane operator shall not leave the controls at any time while a load is attached.

7.3.18 Crane operators shall only pick up loads when the boom head and hook are centered directly over the load.

7.3.19 All crane lifts shall be partially lifted (e.g., floated for at least 3 seconds) to ensure rigging and lift integrity prior to proceeding with the actual lift.

7.3.20 A designated signalman shall be used at all times during the lifting, moving, and setting of a load. Only one designated signalman shall give signals to the crane operator. Universal hand signals shall be used. In the event that the crane operator cannot see the signalman, radio communications shall be used.

7.3.21 When a crane is operating near an energized power line, a designated signalman shall be assigned to ensure the following minimum distances are maintained (see Table 7.1).

Table 7.1 Power Line Clearance Distances

Voltage	Absolute Limit of Approach
Up to 50,000 volts	3.1 meters/10 feet
50,000 to 200,000 volts	4.6 meters/15 feet
200,000 to 350,000 volts	6.1 meters/20 feet
Over 350,000 volts	7.6 meters/25 feet

7.3.22 Personnel shall not ride a hook or auxiliary headache ball at any time. Personnel shall not ride the load during the lift.

7.3.23 Welding on, or modification of, hooks and other lifting equipment is strictly prohibited.

7.3.24 Cranes shall be secured during high winds or after working hours by snubbing to structures, laying down lattice booms, withdrawing hydraulic boom extensions, or according to manufacturer's specifications. Tower cranes when unattended shall have the slew brakes released to allow weathervaning.

7.4 Onshore Crane Operations

7.4.1 Crane travel on highways and outside plant areas shall be with the normally mounted boom sections only. All hydraulic cranes shall have boom sections fully retracted, jibs removed or stowed, and hook blocks secured.

7.4.2 A positive locking device shall be engaged to prevent the boom from swinging during travel.

7.4.3 For cranes fitted with retractable suspension units, the suspension shall be level before traveling.

7.4.4 Hydraulic cranes traveling inside plant facilities with more than the normally mounted boom sections shall not travel a distance more than 1 km (0.6 miles).

7.4.5 Lattice boom cranes traveling inside plant facilities shall be permitted without boom disassembly and on the same job, providing the movement is less than 1 km (0.6 mile) and the crane is escorted at the front and back.

7.4.6 Cranes traveling inside plant facilities shall be assisted by a flagman to ensure the boom tip is clear of any obstruction.

7.4.7 Cranes shall not be used to drag a load along the ground.

7.4.8 Cranes working near trenches and excavations shall be at the minimum clearance specified in Chapter II-1, *Excavations and Shoring*.

7.4.9 Cranes shall be provided with a 30 m (100 ft) tape measure to assist with crane positioning and determining the crane's exact working radius.

7.4.10 Cranes shall have a minimum tail swing clearance of 0.6 m (2 ft). Barricades shall be provided at the crane's working radius when working around personnel. See Figure 7.4.

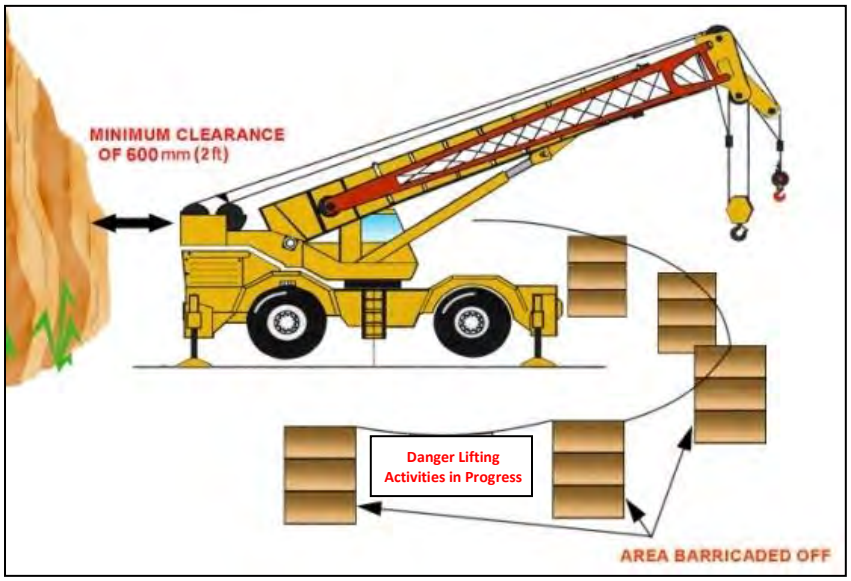

Figure 7.4 Tail Swing Clearance

7.5 Side Boom Tractors

7.5.1 Lifts using side boom tractors shall be per GI 7.028.

7.5.2 Prior to traveling, the side boom tractor operator shall:

A. Visually check the immediate surrounding area to ensure it is free of obstructions and personnel.

B. Sound a warning signal, if supplied by the manufacturer, prior to movement and intermittently during travel.

C. When traveling with a load, check the position of the load, boom location, ground support, travel route, and speed of movement to ensure that they do not present a safety hazard.

7.5.3 Side boom tractors when used for lifting purposes other than pipe laying shall have a safety latch fitted on the hook or the hook/sling wired ("moused") to prevent a slack sling becoming loose. See Chapter III-8, *Slings and Rigging Hardware*. Additionally, certified riggers are not required when using side boom tractors to conduct pipe laying operations (see GI 7.028).

7.6 Offshore Crane Operations

7.6.1 SA and contractor crane operations in marine/offshore areas shall be per GI 7.024.

7.6.2 SA and contractor crane operators and riggers working in marine/offshore areas shall be certified per GI 7.024.

7.6.3 Mobile land cranes mounted on vessels shall be adequately supported and sea-fastened.

7.6.4 The land crane installation shall be inspected and approved by the SA Inspection Department (ID) prior to initial use.

7.6.5 Cranes operating in hazardous areas shall be equipped with the necessary explosionproof accessories per GI 7.024.

7.6.6 Internal combustion engines shall be equipped with spark arrestors.

7.6.7 Personnel carriers ("Billy Pugh" baskets) when used for personnel transfers shall be in accordance with GI 7.024 and Chapter IV-3, *Marine Operations*, including:

- Crane hooks shall have a safety latch.
- Lifts shall be under power control during both up and down travel.
- An operable anti-two block device shall be used.
- The rated capacity of personnel carriers shall be clearly displayed and shall not be exceeded.
- Personnel on the carrier shall wear an approved personal flotation device (PFD).
- Personnel carriers shall bear a valid inspection sticker.
- Personnel carriers shall not be used as work platforms.

7.7 Critical Crane Lifts

7.7.1 A Critical Lift Plan (SA 9644) shall be completed and approved per GI 7.024 and/or GI 7.028, and made available on-site prior to any critical crane lift.

7.7.2 Critical crane lifts include, but are not limited to, lifts:

A. When any part of a crane whose boom or boom attachment is to be within 10 m (33 ft) of hydrocarbon or pressurized piping. This includes cranes having to suspend a load over a vessel, piping, or equipment containing hydrocarbons, steam, or other pressurized liquids.

B. When any part of a crane whose boom or boom attachment is to be within 10 m (33 ft) of any populated/traffic areas. This includes cranes having to suspend a load over pedestrians, vehicle traffic, occupied construction equipment or occupied buildings.

C. When any part of a crane whose boom or boom attachment is to be within 10 m (33 ft) of a railway line.

D. Requiring an attachment to the main boom.

E. When any load is 36,300 kg (40 tons) or greater.

F. On rubber or pick-and-carry lifts.

G. When any load that exceeds 85% of the crane's rated load capacity or manufacturer's specifications for that specific lift.

H. Occurring at night (i.e., between sunset and sunrise).

I. When an explosion, fire, or high heat hazard is present.

J. When the crane is operating near energized power lines.

K. Involving high level or long reach lifting.

L. On barges, vessels, or hydrocarbon-loading piers.

M. With at least one vessel afloat and the sea conditions exceed those noted in GI 7.024.

N. Other crane lifts as required by the SA proponent organization (SAPO).

7.7.3 A SA-certified Rigger-I shall be in charge of coordinating all critical crane lifts.

7.7.4 Nighttime crane lifts require prior written approval from the SA facility manager, except during a test and inspection (T&I) or shutdown.

7.7.5 The work area for nighttime crane lifts shall be provided with proper lighting sufficient to perform the lift safely.

7.8 Special Critical Crane Lifts

7.8.1 Tailing, tandem (multiple) or turning lifts shall be per GI 7.028 and require:

A. Derating of all involved cranes by 25% of the load chart.

B. Utilizing cranes of the same size, manufacturer, and model, if possible, for tandem (multiple) and turning lifts.

C. Having a separate, approved Critical Lift Plan on-site prior to the lift each time one of these types of lifts is performed.

D. Having a SA-certified Rigger-I in charge of actual lift coordination.

E. Drilling and workover operations involving the maneuvering of bottom hole assemblies per GI 7.028.

7.8.2 Crane-Suspended Personnel Platform (Manbasket) lifts shall be per GI 7.027, including the following:

A. Work from or transport by crane-suspended personnel platforms (manbaskets) shall only be allowed when conventional means of performing the work or reaching the work site (such as personnel hoist, ladder, stairway, aerial lift, elevating work platform or scaffold) would be more hazardous or is not practical because of structural design or work site conditions.

B. Manbaskets shall be inspected by a certified inspector per GI 7.027 and shall have a valid inspection sticker.

C. An identification plate shall be attached to the manbasket and shall display the following minimum information:

- Identification number (ID #).
- Empty weight.
- Rated capacity.
- Maximum number of personnel allowed.
- Date of manufacture.

D. An approved Critical Lift Plan (SA 9644) shall be available on-site prior to any manbasket lift.

E. Each manbasket operation shall have an approved Crane Suspended Personnel Platform (Manbasket) Permit (SA 9648) properly issued prior to any manbasket lift.

F. A prelift safety meeting shall be held, as required by the Critical Lift Plan form and the Crane Suspended Personnel Platform (Manbasket) Permit.

G. The crane capacity load chart shall be derated 50% when lifting an occupied manbasket.

H. Manbasket crane lifts shall not be performed in wind speeds exceeding 25 km/h (15 mph) (13 knots) (7 m/sec).

I. Manbasket lifts shall not be performed if the crane operator has been working for more than 10 continuous hours prior to the start of the lift, or the lift will not be completed before the crane operator has been working for 12 continuous hours.

J. Manbasket dedicated rigging hardware, for attachment to the crane hook, shall:

- Have four swaged (mechanically spliced) wire rope slings, of equal length and with a rated SWL required for the most heavily loaded leg, attached to a shackle or approved steel master link, which shall be attached to the crane hook on one end.
- Have each of the other ends of the four slings attached to the top manbasket eyelets with individual shackles and designed with thimbles in each eye.
- Have the length of the four slings long enough to permit adequate head room for workers inside the manbasket while maintaining a minimum sling angle of 45 degrees from the crane hook.
- Have an approved, self-closing safety latch fitted on the crane hook.
- Have slings designated for manbasket use only and not used for any other operation/lifting purpose.

K. Prior to the actual manbasket lift, a trial lift shall be performed with a test weight equivalent to the personnel to be lifted. The trial lift shall start at ground level, or at the location where personnel will enter the manbasket, and proceed to each location where the manbasket is to be positioned to ensure there is not excessive up and down boom movement and to verify proper rigging, etc.

L. Hoisting of the manbasket shall be performed in a slow, controlled, cautious manner with no sudden movements of the crane, derrick, or manbasket. Crane operators shall not lift or lower an occupied manbasket at a speed in excess of 30.5 m/min (0.5 m/sec), (100 ft/min).

M. Cranes shall not travel with an occupied manbasket.

N. Free-fall devices shall not be used on a friction or hydraulic-type crane hoist during suspended manbasket operations.

O. The crane operator shall not leave the controls at any time while a manbasket is attached to the hook.

P. Personnel shall only be permitted to work outside a suspended manbasket when the requirements of GI 7.027 are met.

Q. A designated signalman shall be used at all times during manbasket operations. Only one designated signalman shall give signals to the crane operator. They shall wear a high-visibility vest for easy identification. Radio communication is preferred, especially in cases where signal relays are required.

R. If at any time the crane operator does not have direct eye contact with the designated signalman, they shall immediately stop the manbasket operation until such time that they can again see the signalman.

S. Each worker inside a suspended manbasket shall wear an approved full-body harness and approved lanyard attached to a designated location on the manbasket. Fall arrest equipment shall allow a maximum free fall of 1.8 m (6 ft). See Section II-5, *Fall Protection*.

T. Crane hook suspended air tugger operations shall not be permitted onshore.

U. The crane shall not be used for any other purpose while handling a suspended manbasket.

V. Welding electrodes shall not be allowed to make contact with the manbasket or rigging. Welders shall remove the electrode from the electrode holder when welding operations are discontinued for any period of time.

W. Manbasket operations performed at night shall require prior written approval of the facility manager.

7.8.3 On rubber or pick-and-carry lifts:

A. The crane operator shall confirm that the proper recommended tires are fitted. Sand tires shall not be used.

B. The crane operator shall confirm the proper recommended tire pressure is attained and tires have no visible defects.

C. The travel surface shall be level, free of potholes, and with acceptable ground conditions. Travel speed shall not exceed 4 km/h (2.5 mph).

D. The load shall be secured to prevent any swing into the crane structure. Snubbing or tag lines shall be used.

7.8.4 Blind lifts

A. For blind lifts, several signalmen may be used. However, when using hand signals all signalmen shall be clearly visible to a final signalman, who in turn shall be visible to the crane operator.

B. All signalmen and crane operators shall be familiar with and use an established set of universal hand signals.

C. If hand signals are not used, all signalmen and the crane operator shall be provided with properly working communications equipment.

8. Slings and Rigging Hardware

8.1 Purpose

This chapter describes minimum safety requirements for use of slings and other rigging hardware by Saudi Aramco (SA) and contractor personnel.

8.2 References

SA General Instructions (GIs):

GI 7.024, *Marine and Offshore Crane, Hoist, and Rigging Operations*

GI 7.027, *Crane Suspended Personnel Platform (Manbasket) Operations*

GI 7.028, *Crane Lifts: Types and Procedures*

GI 7.029, *Rigging Hardware Requirements*

GI 7.030, *Inspection and Testing Requirements for Elevating/Lifting Equipment*

SA Standard Drawings

AA-036878-001, *Spreader Beams H-Beams*

AA-036878-002, *Spreader Beams Pipes*

American Society of Mechanical Engineers (ASME):

ASME B30.9, *Slings*

ASME B30.10, *Hooks*

ASME B30.16, *Overhead Hoists (Underhung)*

ASME B30.20, *Below-the-Hook Lifting Devices*

ASME B30.21, *Lever Hoists*

ASME HST-2, *Performance Standard for Hand Chain Manually Operated Chain Hoists*

American National Standards Institute (ANSI)/American Society of Safety Engineers (ASSE):

ANSI/ASSE A10.42, *Safety Requirements for Rigging Qualifications and Responsibilities*

IPT's Crane and Rigging Handbook

U.S. Code of Federal Regulations (CFR):

29 CFR 1926.251, *Rigging Equipment for Material Handling*

8.3 General Requirements

8.3.1 Rigging shall be per GI 7.024, GI 7.027, GI 7.028, GI 7.029, and IPT's Crane and Rigging Handbook.

8.3.2 All riggers shall be certified per GI 7.024 and/or GI 7.028, as applicable. Only certified riggers shall rig loads.

8.3.3 Slings shall be in accordance with GI 7.029 and ASME B30.9 or equivalent.

8.3.4 Other rigging hardware shall be in accordance with GI 7.029 and ASME B30.20 or equivalent.

8.3.5 Slings and other rigging hardware shall have a minimum design safety factor of 5.

8.3.6 The manufacturer's safe working load (SWL) and serial number shall be clearly marked on each sling. Riggers shall not use a sling unless the SWL is clearly visible.

8.3.7 Slings shall have a durable identification tag or ferrule permanently affixed that contains the identification information required by GI 7.029 for that specific type of sling. Identification information shall be maintained by the SA proponent organization (SAPO) or the contractor in legible condition during the life of the sling. See Figure 8.1.

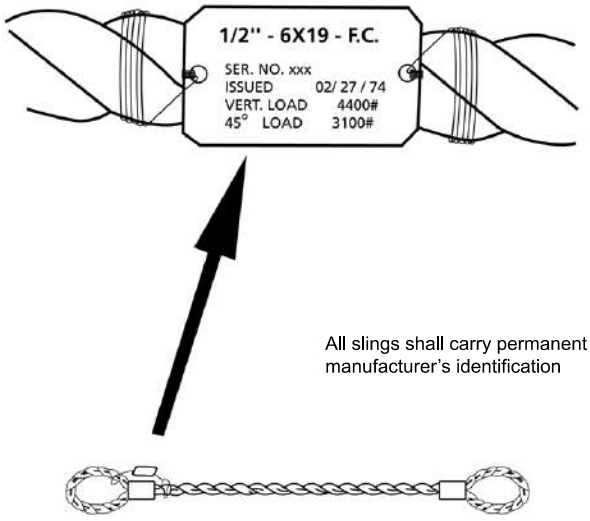

Figure 8.1 Sling Identification Tag

8.3.8 Fasteners or other rigging hardware manufactured in-house from bolts, rods, pins, hooks, etc., shall not be used.

8.3.9 SAPOs and contractors shall maintain a job-site log of slings containing the following information: sling ID number, sling description, date placed in service, SWL as stated in proof load certificate, and full details of periodic inspections (e.g., completed SA 9657 forms).

8.3.10 Slings shall not be modified, repaired, shortened, or lengthened.

8.3.11 Defective or damaged slings and other rigging hardware, or slings and other rigging hardware not complying with SA requirements, shall be recorded in the Sling Inspection Log and immediately removed from the job site and destroyed.

8.3.12 Working conditions that may affect slings and other rigging hardware shall be evaluated, with special attention to temperatures, chemicals, abrasions, etc.

8.3.13 Slings or other rigging hardware in contact with sharp corners shall be padded to prevent damage to the sling, other rigging hardware or the load being lifted.

8.3.14 Slings shall be rigged to provide the best load control.

8.3.15 The force on each sling during a lift shall be less than the sling manufacturer's rated SWL. The lift capacity and force calculated for each sling shall be reduced as required for the lifting angle of the slings. See the IPT's Crane and Rigging Handbook. Multi-leg slings shall have a rated SWL required for the most heavily loaded leg(s) rather than equally distributing the total lifted load, as it is possible for some of the legs to take essentially the full load while the other legs merely balance the load.

8.3.16 The recommended safe lifting angle for slings is 60 degrees above the horizontal. Sling angles less than 30 degrees above the horizontal shall not be used.

8.3.17 Other rigging hardware (e.g., shackles, eyebolts, hooks, rings, links, coupling pins) shall be selected to provide capacities equal to or greater than the SWL of the sling.

8.3.18 Rigging from process piping is prohibited. Loads shall be rigged from load-bearing structural members only after prior approval is obtained from the SAPO.

8.3.19 Standing or walking under a suspended load is prohibited.

8.3.20 Suspended loads shall not be left unattended.

8.3.21 Slings and other rigging hardware shall be stored so as to protect them from mechanical damage, corrosives, direct sunlight, moisture, extreme heat, etc.

8.4 Inspection

8.4.1 The rigger shall visually inspect slings and other rigging hardware prior to each use per GI 7.029.

8.4.2 Slings, other rigging hardware, and hooks shall also be periodically inspected per GI 7.029 by a certified rigger at a maximum interval of 6 months. These inspections shall be recorded in the Sling Inspection Log (SA 9657).

8.4.3 The SAPO may request that a certified inspector perform additional assessments of slings and other rigging hardware as needed. The SAPO reserves the right to require an increased frequency of inspections.

8.4.4 A-frames shall be inspected and certified by a SA-certified inspector per GI 7.030 prior to attaching rigging equipment.

8.5 Alloy Steel Chain and Metal Mesh Slings

8.5.1 Alloy steel chain slings (see Figure 8.8) and metal mesh slings shall not be welded upon and shall not have homemade or repaired links/mesh.

8.5.2 Alloy steel chain and metal mesh slings shall be visually inspected by the rigger prior to use to verify they are not stretched twisted, bent, cracked, etc.

8.6 Wire Rope Slings

8.6.1 Eyes for wire rope slings shall be the Flemish eye type (i.e., swaged endings and pressed metal sleeve). See Figure 8.2.

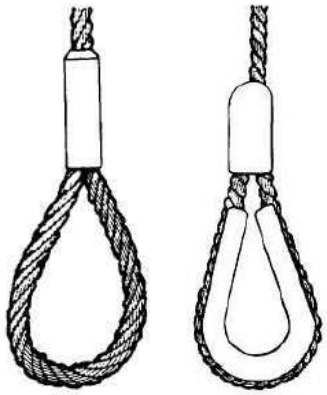

Figure 8.2 Flemish Eye and Pressed Metal Sleeve

8.6.2 Homemade wire rope slings are not permitted and shall not be used.

8.6.3 Fold back eyes for wire rope slings are not permitted and shall not be used. See Figure 8.3.

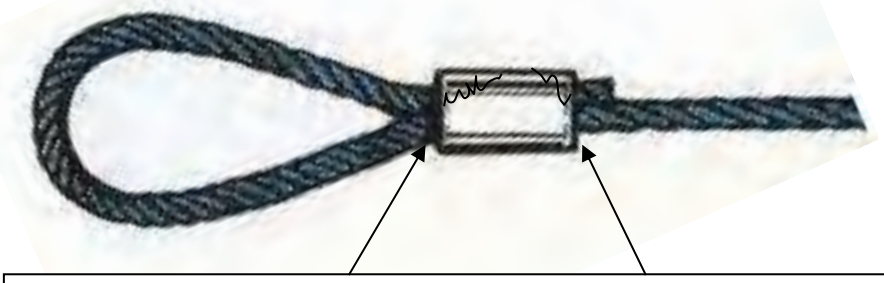

Fold back eyes are susceptible to cracking at these locations. Failure of fold back slings can occur without warning. Fold back slings shall not be used for overhead or construction rigging.

Figure 8.3 Fold Back Eye (Prohibited)

8.6.4 Aluminum ferrules shall not be used for wire rope slings.

8.6.5 Wire rope slings shall be visually inspected by the rigger prior to use to verify there is no evidence of the following (see Figure 8.4 and IPT's Crane and Rigging Handbook for examples):

A. Missing or illegible sling tag identification, including SWL.

B. Broken wires.

C. Abrasion (e.g., wire wear exceeds 1/3 the original diameter).

D. Crushed strands.

E. Kinking, birdcaging, or other distortion.

F. Evidence of heat damage.

G. End attachments that are cracked, deformed, or excessively worn.

H. Bent or open eyes/hooks.

I. Severe corrosion.

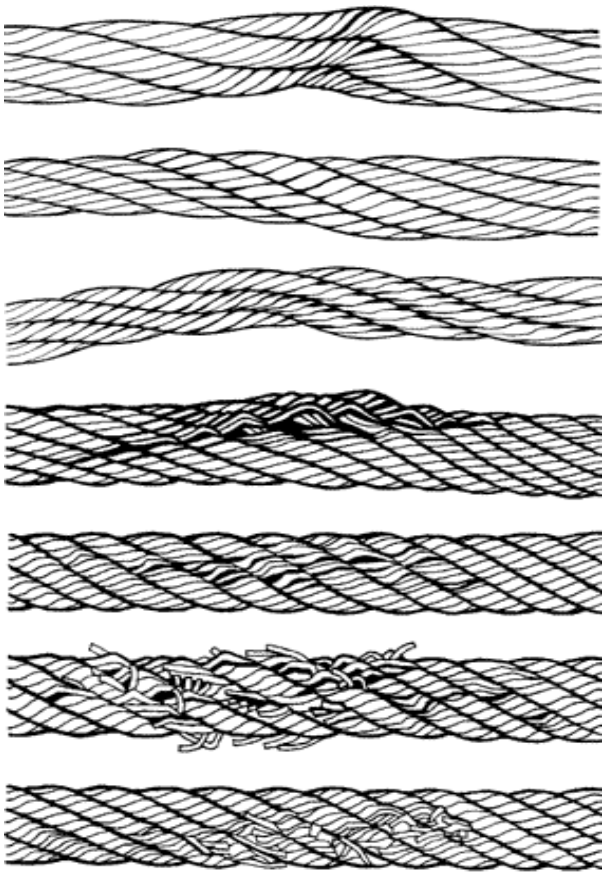

Figure 8.4 Examples of Wire Rope Damage

8.7 Synthetic Webbed Slings

8.7.1 Only synthetic webbed slings fabricated by stitching shall be used. See Figure 8.9.

8.7.2 Synthetic webbed slings shall be visually inspected by the rigger prior to use to verify there is no evidence of the following (see Figure 8.5 for examples):

A. Chemical or thermal burns on any surface of the sling.

B. Considerable fiber breakage beyond the edges (e.g., the warning strand is not visible).

C. Snags, punctures, tears, or cuts.

D. Broken stitches.

E. Distorted or damaged fittings.

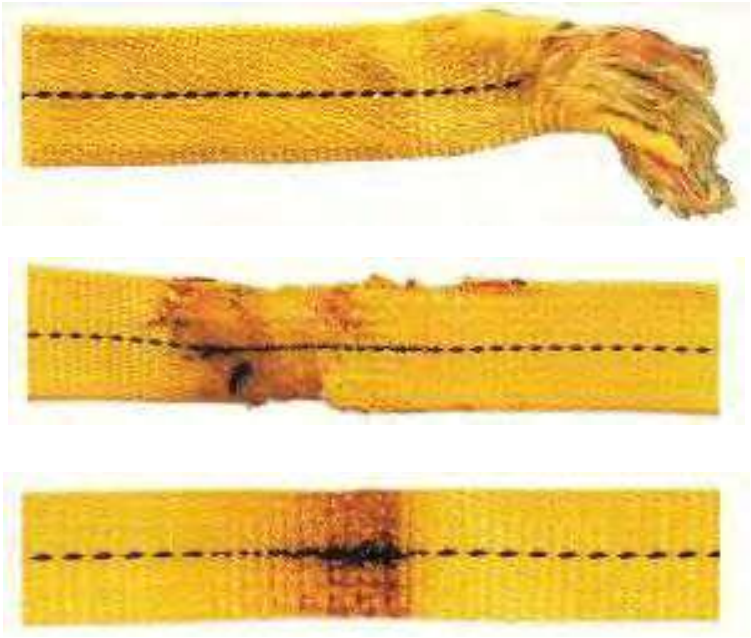

Figure 8.5 Examples of Webbing Damage

8.8 Hooks

8.8.1 Hooks shall be in accordance with GI 7.029 and ASME B30.10 or equivalent.

8.8.2 Hooks designed with a safety latch (catch) shall have a properly fitted and self-closing latch. See Figure 8.10.

8.8.3 Hooks not designed with a safety latch shall be "moused" (see Figure 8.10) to secure the load, except for sidebooms in pipe laying service. See Chapter III-7, *Cranes and Lifting Equipment*. (Note: "Mousing" entails wrapping wire or rope around the throat of the hook to ensure the rigging does not slip out of the hook during a lift.)

8.8.4 Loads shall be applied only on the part of the hook designed to take them (i.e., the bend [bow] of the hook).

8.8.5 Hooks shall be visually inspected by the rigger prior to use to verify there is no evidence of the following:

A. Visible cracks, nicks, gouges, or corrosion.

B. The body is twisted more than 10 degrees out of alignment.

C. The throat opening is stretched open more than 15% beyond the manufacturer's specification.

8.9 Spreader Beams

8.9.1 Spreader beams (bars) shall be in accordance with GI 7.029 and ASME B30.20 or equivalent.

8.9.2 Spreader beams shall be permanently identified with the manufacturer's name, ID/serial number, gross weight, SWL (rated capacity) and shall have a valid inspection sticker issued by SA or by a SA-approved third-party. See SA standard drawings AA-036878-001 and AA-036878-002.

8.9.3 Spreader beams shall be visually inspected by the rigger prior to use to verify there is no evidence of damage or defect.

8.10 Shackles

8.10.1 Shackles and other connecting devices (see Figure 8.10) shall be completely closed or bolted.

8.10.2 Shackles shall be marked with the manufacturer's SWL.

8.10.3 The correct shackle pin shall be used with each shackle. A shackle pin shall never be replaced with rebar, mild steel bolt, or similar item.

8.10.4 Shackles shall be visually inspected by the rigger prior to use to verify there is no evidence of the following:

A. Signs of cracking around the eyes, signs of body wear, distortion, or bending.

B. Pin does not secure (i.e., tighten) or seal adequately.

C. Signs of pin wear or flattening.

8.11 Eyebolts and Safety Hoist Rings

8.11.1 Shoulderless eyebolts shall be used only for vertical lifts. See Figure 8.6.

8.11.2 Shouldered eyebolts shall only be loaded at angles greater than 45 degrees off the horizontal and shall only be loaded in the plane of the eye. See Figure 8.6.

8.11.3 Safety hoist rings (swivel eyes) shall be bolted in place with a calibrated torque wrench to maintain maximum capacity at all angles.

8.11.4 Eyebolts shall be visually inspected by the rigger prior to use to verify there is no evidence of the following:

A. Visible cracks, wear, or damage (often found inside and outside the diameter at the top of the eye).

B. Stripped threads on the shank.

C. Bending of the shank or distortion of the eye.

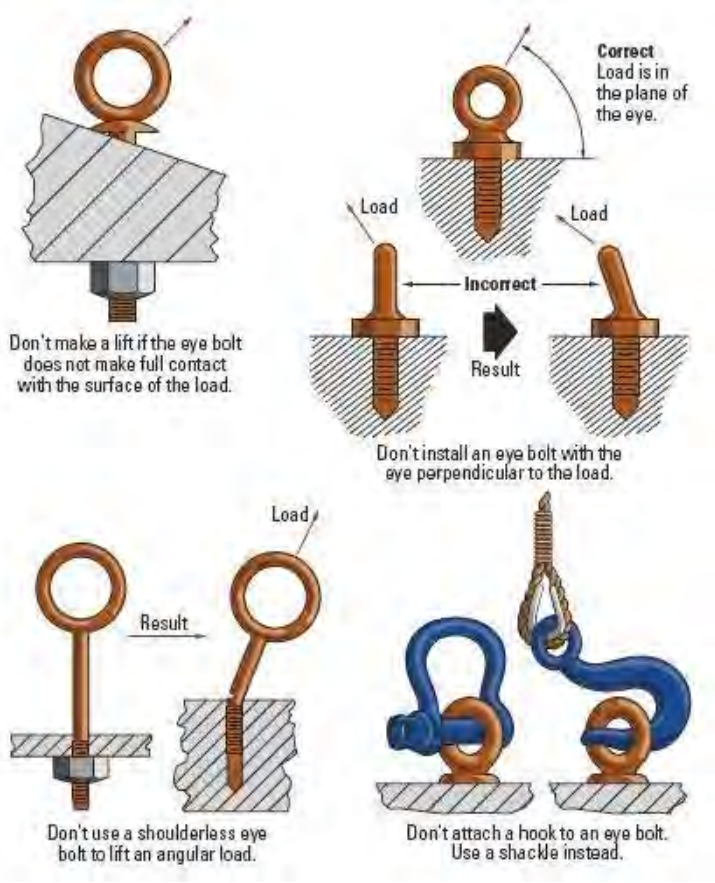

Figure 8.6 Use of Eyebolts

8.12 Wire Rope Clips

8.12.1 Wire rope clips (clamps) shall not be used to make slings for lifting purposes.

8.12.2 Wire rope clips shall be installed with the bridge (flat) of the clip bearing against the live (long) end of the wire rope and with the U-section pressing against the dead (short) end of the rope (e.g., “Don’t saddle a dead horse”). See Figure 8.7.

8.12.3 Wire rope clips shall be spaced about six-rope diameters apart and shall not be staggered. See Figure 8.7.

8.12.4 Wire rope clips shall be visually inspected by the rigger prior to use to verify there is no evidence stripped threads, cracks or other damage/defect.

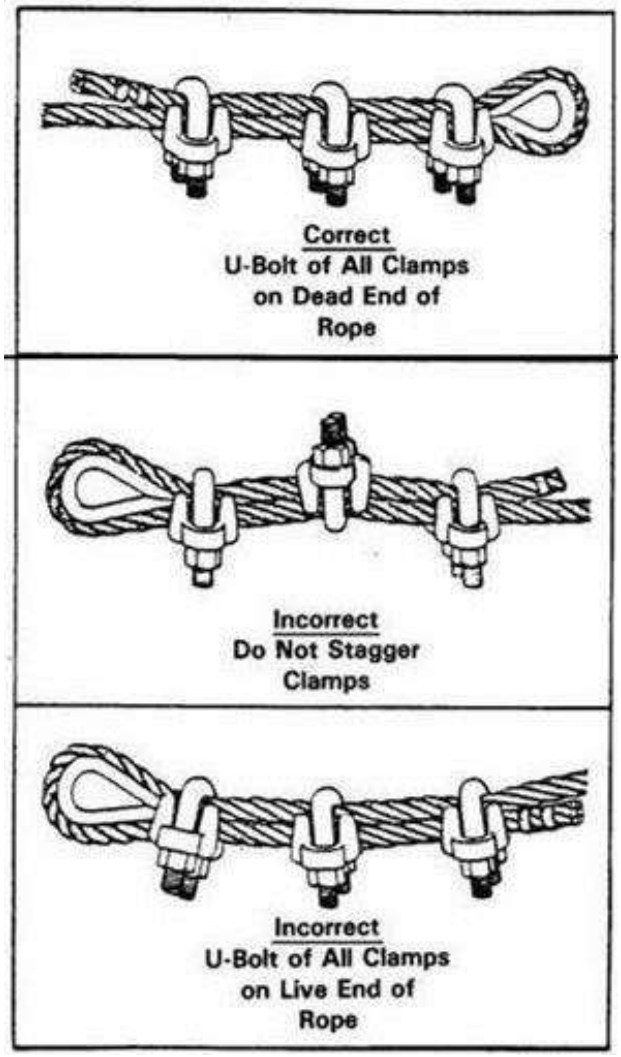

Figure 8.7 Wire Rope Clip Installation

8.13 Come-A-Longs

8.13.1 Come-a-longs with defective or damaged components shall not be used.

8.13.2 The throat latch shall work properly and be in good condition.

8.13.3 The cable, chain, or strap shall be in good condition (e.g., no fraying or splitting).

8.13.4 The rated load capacity shall be clearly marked on the come-a-long and shall not be exceeded.

8.13.5 Appropriate end clamps and connectors shall be used.

8.13.6 Come-a-longs shall not be used instead of blocking raised equipment.

8.13.7 Come-a-longs shall not be straddled or connected to each other to increase load capacity or reach.

8.13.8 Come-a-longs shall not be used for lifting loads unless they meet the requirements of ASME B30.21.

8.13.9 Users shall ensure anchor points for come-a-longs are sufficient for the load to be lifted.

8.13.10 Use of cheater bars on come-a-long levers is prohibited.

8.14 Chain Falls

8.14.1 Chain falls shall meet the requirements of ASME B30.16.

8.14.2 The rated load capacity shall be clearly marked on the chain fall and shall not be exceeded.

8.14.3 The lift chain, pinion, sheaves, and hooks on chain falls shall be inspected prior to use for excessive wear or distortion.

8.14.4 Users shall ensure anchor points for chain falls are sufficient for the load to be lifted.

8.14.5 Chain falls shall have a properly fitted and working safety latch.

8.14.6 Scaffolding shall not be used as a point of attachment for lifting devices such as chain falls, unless the scaffolding is specifically designed for that purpose. See Chapter II-2, *Scaffolding*.

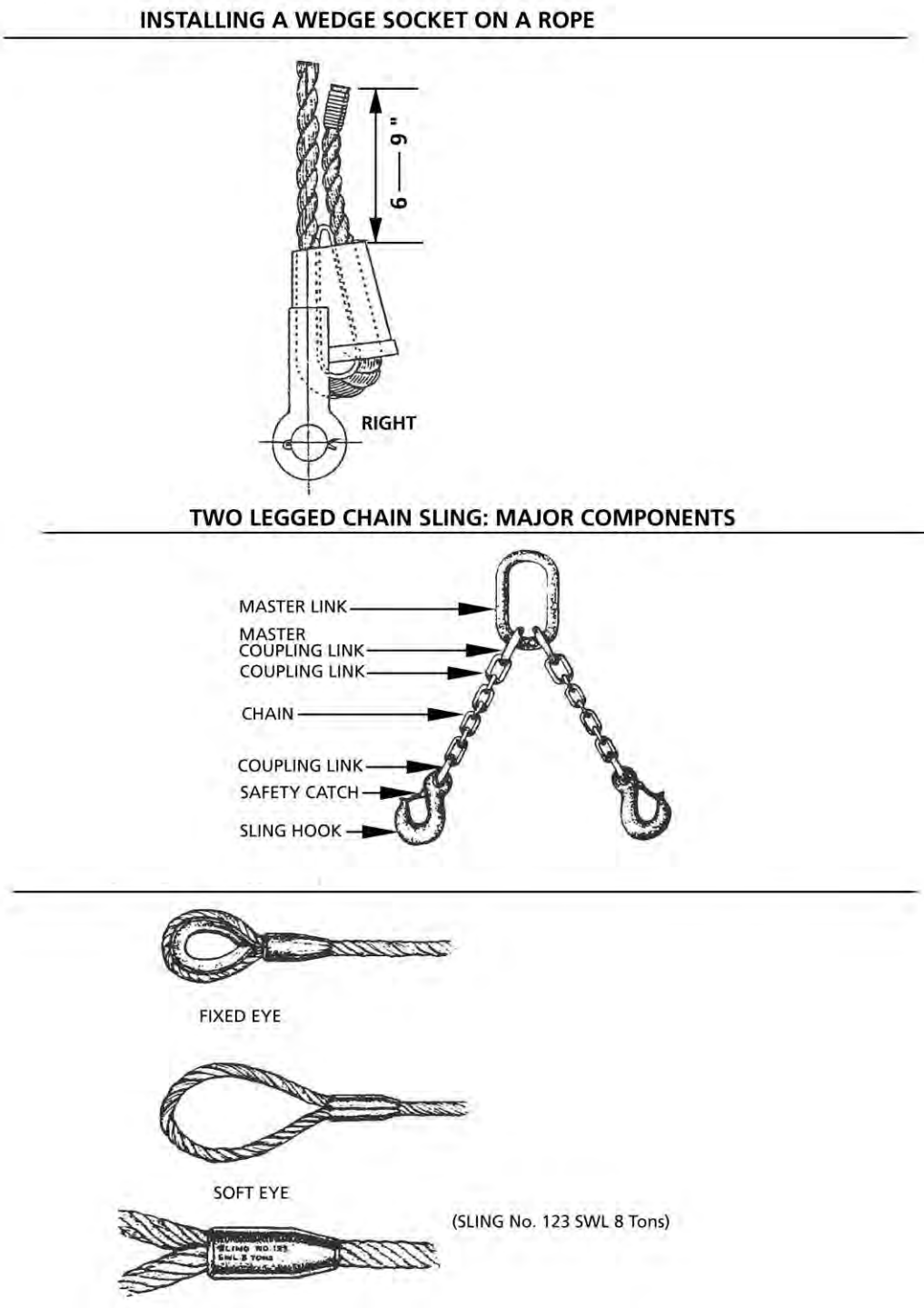

Figure 8.8 Sling Components and Fixings

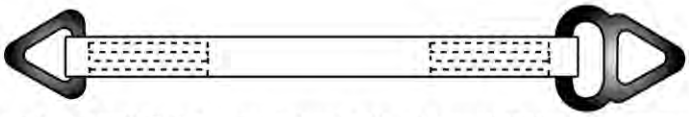

TYPE 1. Sling made with a triangle fitting on one end and a slotted triangle choker fitting on the other end. It can be used in a vertical, basket, or choker hitch.

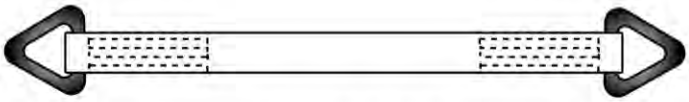

TYPE 2. Sling made with a triangle fitting on both ends. It can be used in a vertical or basket hitch only.

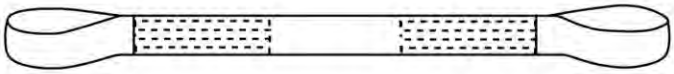

TYPE 3. Sling made with a flat loop eye on each end with loop eye opening on same plane as sling body. This type sometimes called a flat eye and eye, eye and eye, or double eye sling.

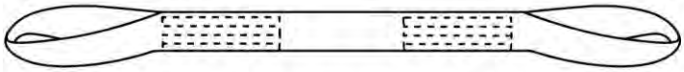

TYPE 4. Sling made with both loop eyes formed as in Type 3, except that the loop eyes are turned to form a loop eye which is at a right angle to the plane of the sling body. This type of sling is commonly referred to as a twisted eye sling.

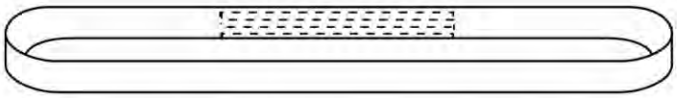

TYPE 5. Endless sling, sometimes referred to as a grommet. It is a continuous loop formed by joining the ends of the fabric together with a splice.

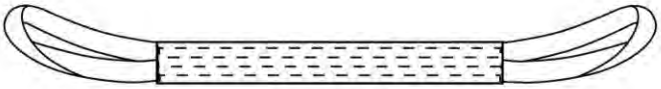

TYPE 6. Return eye (reverse eye) sling is formed by using multiple widths of webbing held edge to edge. A wear pad is attached on one or both sides of the sling body and on one or both sides of the loop eyes to form a loop eye at each end which is at a right angle to the plane of the sling body.

Figure 8.9 Synthetic Webbing Slings

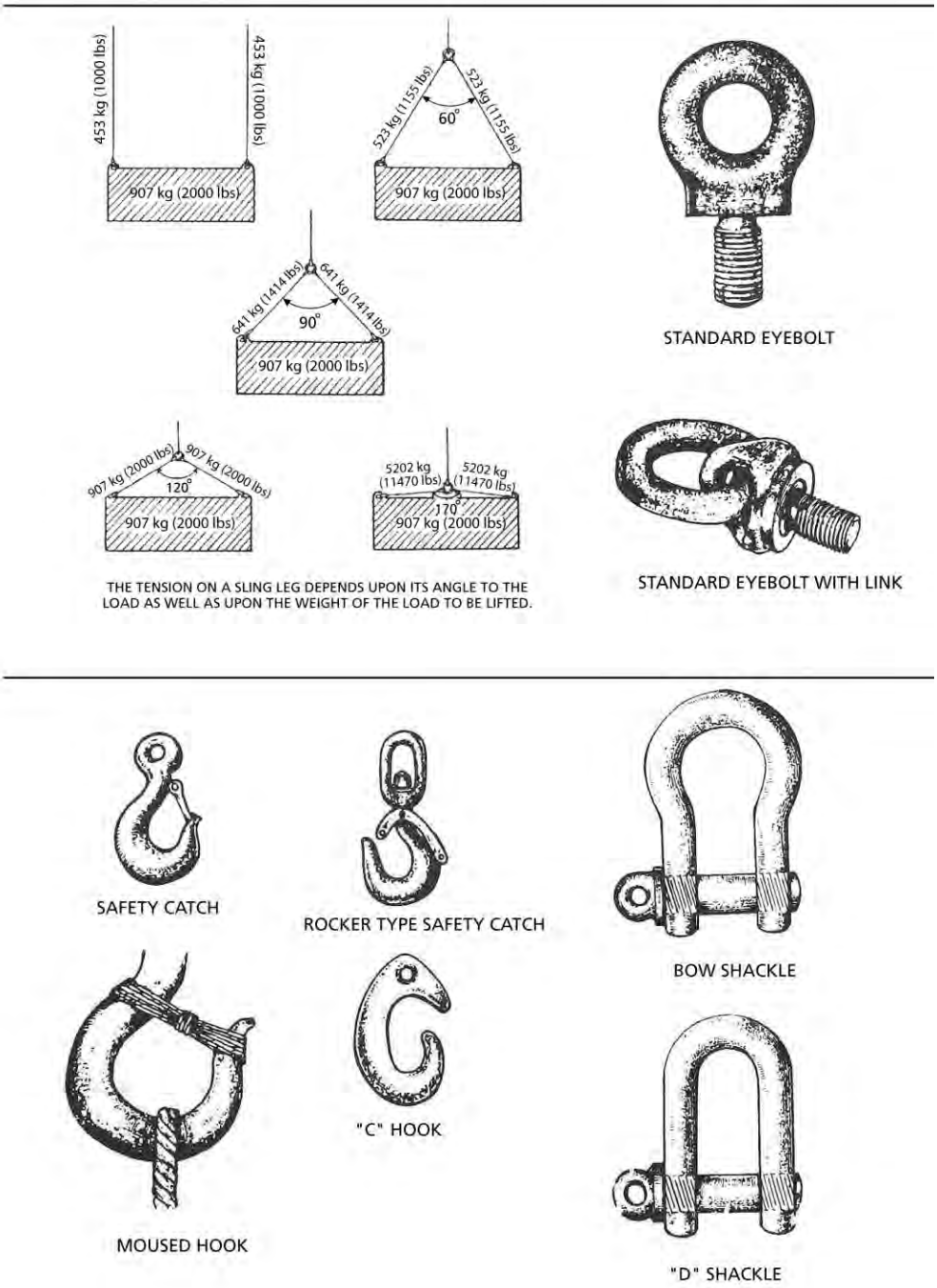

Figure 8.10 Sling Loading and Crane Hooks

1. Diving Operations

1.1 Purpose

This chapter describes minimum safety requirements for industrial diving operations.

1.2 References

International Marine Contractors Association (IMCA):

International Code of Practice for Offshore Diving (IMCA D014) and Diving Guidance Notes

U.S. Navy Diving Manual:

NAVSHIPS 0994-001, *Air Diving*

Saudi Aramco Medical Services Organization (SAMSO), Medical Services Policy (MSP):

MSP-94, *Diving Medical Incidents*

Saudi Aramco (SA) Marine Instruction Manual (MIM):

Instruction No. 1197.001, *Procedures and Safety Rules for Diving Operations*

Instruction No. 1197.002, *Procedures and Safety Rules for Surface Supplied Mixed Gas Diving Operations*

1.3 General Requirements

1.3.1 Industrial diving operations shall be in accordance with MIM 1197.001 and MIM 1197.002.

1.3.2 Divers shall be at least 21 years old.

1.3.3 Divers shall be competent, certified (as required) and experienced in all aspects of their assigned job, including underwater inspection, construction, repairs and salvage work. Divers performing oxy-arc cutting, thermal lancing or using pneumatic and hydraulic tools shall be technically proficient in these activities.

1.3.4 Divers shall show evidence of their training and experience, upon request.

1.3.5 Divers shall be fluent in English (reading and writing) and have the ability to depict the results of an underwater inspection by use of sketches.

1.3.6 Safe means of entry and exit from the water shall be provided.

1.4 Diving Equipment

1.4.1 Diving-related equipment shall be able to operate properly in the prevailing high temperatures of Saudi Arabian coastal waters.

1.4.2 Air compressors supplying breathing shall be in accordance with Chapter III-3, *Mechanical and Heavy Equipment*, of this manual. Compressors shall be able to provide breathing air at a pressure and capacity required for the maximum depth of the diving operation.

1.4.3 Hoses, fittings and connections shall be screw-thread type and properly fitted together. Hoses, fittings and connections for breathing systems shall be grease- and oil-free.

1.4.4 An adequate supply of suitable protective clothing, such as diving suits, coveralls, gloves and hoods, shall be available to divers at all times. Insulated gloves shall be provided to divers performing welding, cutting or burning operations.

1.4.5 Each diver shall be equipped with "bail-out" equipment.

1.4.6 Reserve Air Supply

A. A reserve supply of air shall be provided, maintained and immediately available in the event of a primary air supply failure. This air must be stored in containers or else supplied by two totally independent dedicated sources.

B. Sufficient compressed air must always be available for two emergency dives to the full intended diving depth as reserve.

C. Reserve supply for recompression chambers shall be sufficient to pressurize both locks of the decompression chamber to the maximum possible treatment depth plus sufficient air for three complete surface decompression cycles.

1.4.7 Inspection and Maintenance of Diving Equipment

A. Self-contained underwater breathing apparatus (SCUBA) tanks, recompression chambers, volume tanks, high-pressure cylinders and storage vessels shall be regularly checked and tested at prescribed intervals in accordance with the manufacturer's instructions and SA requirements.

B. Diving equipment shall be regularly inspected at periodic intervals not exceeding 6 months and after the equipment has been modified or repaired. Inspections shall be documented.

C. Diving equipment shall be regularly maintained. Maintenance performed shall be documented.

D. Air cylinders used under water shall be hydrostatically tested, inspected and stamped 3 years from the date of manufacture and at least every 2.5 years thereafter.

E. Air cylinders that are not immersed in seawater shall be inspected internally and hydrostatically tested at intervals not to exceed 5 years. They shall be appropriately stamped to denote this inspection.

F. Hoses providing compressed breathing air or other gases shall be checked for wear and abrasion and subjected to test pressures at least once every 6 months.

G. Pressure gauges showing an error of more than 2.5% shall be adjusted or replaced.

H. Communication systems shall be regularly checked for proper operation. Every wire shall be checked for continuity and for wear if they are combined with a lifeline.

1.5 Communications

1.5.1 A two-way voice communications system shall be used between surface-supplied air or mixed-gas diver(s) and dive team members at the dive location, as well as needed to obtain emergency assistance.

1.5.2 When divers are preparing to enter or leave the water, are in the water or are diving, the International Code Flag "A" (meaning "I have a diver down. Keep well clear of area and maintain a low speed.") shall be flown. See Figure 1.1.

1.5.3 Lights and day marks shall be displayed by vessels engaged in surveying or underwater operations in accordance with Maritime Regulations. See Figure 1.2.

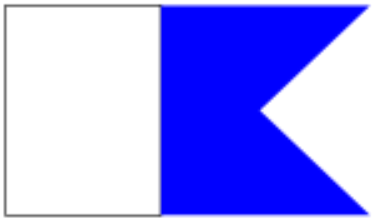

Figure 1.1 International Code Flag "A"

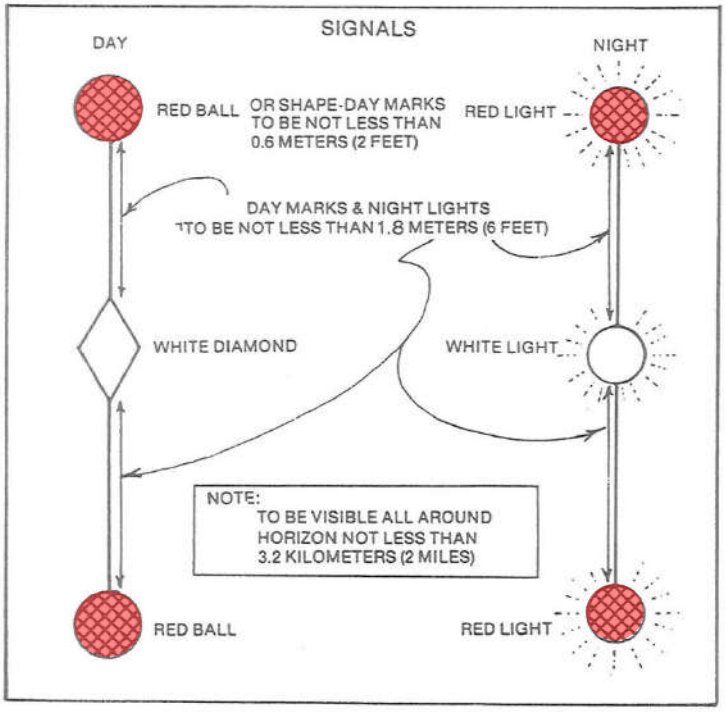

Figure 1.2 Diver Down Signals

1.6 Diving Safety Measures

1.6.1 Divers shall be forewarned about nearby operations that could affect their work, such as submarine blasting, vessels about to move or equipment operation.

1.6.2 A fully dressed standby diver shall be available on deck. See Section 1.9.

1.6.3 Divers working at a depth greater than 10 m (33 ft) shall have access to a recompression chamber for a period of 12 hours after the last dive.

1.6.4 Therapeutic decompression shall take precedence over all other operational requirements.

1.6.5 In case of therapeutic decompression, divers working at a depth greater than 10 m (33 ft) shall have access to a recompression chamber for a period of 24 hours after the last dive.

1.6.6 In mild cases of decompression sickness, a diver may be returned to work at the discretion of the diving supervisor.

1.6.7 After treatment for a case of the central nervous system bends or barotrauma, a diver shall not be permitted to dive again until they have been examined by a medical physician and determined to be fit for return to diving operations.

1.6.8 Each diver shall maintain a personal diving log. Entries shall include, but are not limited to, the following:

- Diver's name.
- Name and address of the diver's employer.
- Date of diving operation.
- Name of the diving supervisor.
- Name of the vessel, barge or installation from which the diving operation is performed.
- Maximum depth reached on each occasion.
- Time spent under water on each occasion.
- Type of equipment used by the diver.
- Work performed by the diver on each occasion.
- Details of decompression sickness or other illness/injury suffered by the diver.
- Any other factor relevant to health.

1.6.9 Each daily entry shall be signed by the diver and the diving supervisor.

1.6.10 Divers shall retain their logbooks for a period of not less than 2 years from the date of the last entry in the logbook.

1.7 Recompression Chambers

1.7.1 A recompression chamber shall be on-site during all diving operations in excess of 18.5 m (60 ft). Dives requiring decompression shall not be performed if there is no recompression chamber available.

1.7.2 The maximum rate of ascent is 9.3 m (30 ft) per minute in the case of air decompression and mixed-gas decompression.

1.7.3 Only necessary articles are allowed in a recompression chamber. No ignition source, including electrical, shall be allowed in the chamber. Smoking shall never be permitted in the chamber, whether under pressure or not.

1.7.4 The recompression chamber shall be kept clean and dry.

1.7.5 Personnel in a chamber under pressure shall ensure that any potential obstructions (including parts of their body) are kept clear of all atmosphere inlets and exhaust openings.

1.7.6 Each diving contractor company shall be responsible for supplying their own recompression chamber(s) and be responsible for the proper maintenance and manning of these chambers.

1.8 SCUBA Diving

1.8.1 The use of SCUBA equipment at depths greater than 18 m (60 ft) shall be restricted/controlled (e.g., by limiting the number of dives and/or duration under water).

1.8.2 SCUBA equipment shall not be used at depths greater than 45 m (150 ft).

1.8.3 SCUBA equipment shall never be used for dives requiring decompression.

1.8.4 In open water, SCUBA divers shall always be attached to a clearly visible float by a lifeline.

1.8.5 In enclosed or restricted water, such as beneath structures, either a lifeline or a "buddy" system (i.e., two divers within line of sight of each other) shall be used.

1.8.6 When using SCUBA equipment, divers shall always wear an approved buoyancy compensator (BC).

1.8.7 SCUBA diving should not be conducted during darkness.

1.9 Standby Divers

1.9.1 Diving operations shall not be performed without a standby diver being immediately available.

1.9.2 Standby divers shall be positioned close to the site of any diving operation and shall be fully dressed (with the exception of face mask or helmet) at all times during the course of any diving operation.

1.9.3 Standby divers in a crane basket shall be fully dressed (including helmet) at all times.

1.9.4 Standby divers shall not be involved in any other surface activity during the diving operation other than that of their duties as standby divers.

1.9.5 Standby divers shall be positioned at the dive control station or in a location where they can hear all communications with the diver below the surface or near to a person tending to a diver who is not equipped with a communication system.

1.9.6 Standby divers shall be fully knowledgeable in emergency procedures necessary to locate, assist or recover any diver in distress.

1.9.7 Standby divers shall be trained in rescue operations and have knowledge of resuscitation techniques for unconscious divers and other basic medical treatment required to assist injured divers at a diving control station or inside a recompression chamber.

1.10 Physical Fitness

1.10.1 Divers shall have a medical certificate issued by a suitably qualified physician. The medical certificate shall specify the individual is "Fit for Diving" and be not more than 12 months old.

1.10.2 Divers shall be trained in First Aid/Basic Life Support (BLS).

1.10.3 A proper first aid kit shall be maintained on-site.

1.11 Medical Diving Emergencies

Incidents involving diving personnel shall be reported to the SA proponent organization in accordance with Chapter I-2, *Incident Reporting and Investigation*, and MSP-94.

2. Marine Operations

2.1 Purpose

This chapter describes minimum safety requirements for all marine operations (e.g. transportation of materials, equipment and personnel, offshore drilling and workover, offshore producing and Single Point Mooring [SPM] operations).

2.2 References

SA General Instructions (GIs):

GI 6.020, *Personal Flotation Devices (PFDs) for Work On, Over or Near Water*

GI 7.024, *Marine and Offshore Crane, Hoist, and Rigging Operations*

Saudi Aramco Engineering Standards (SAESs):

SAES-A-103, *Discharges to the Marine Environment*

SAES-S-007, *Solid Waste Landfill Requirements*

Saudi Aramco *Safety Handbook, Minimum Safety Rules*

Saudi Aramco (SA) Marine Instruction Manual (MIM), including:

Instruction No. 1185.002, *Reporting Procedures and Documentation for the Safe Operation of all Vessels*

Instruction No. 1186.502, *Marine Craft Fueling*

Instruction No. 1186.503, *Marine Craft Cargo Manifests*

Instruction No. 1186.506, *Industrial Solid/Hazardous Waste Disposal Procedures*

Instruction No. 1186.509, *Procedures for the Disposal of Sewage from Marine Vessels*

Instruction No. 1187.001, *Collision and Damage by or to Marine Equipment or Craft*

Instruction No. 1191.001, *Care, Maintenance and Repair of Marine Vessels and Equipment*

Instruction No. 1192.001, *Marine Vessel Operating Practices*

Instruction No. 1196.001, *Whistle Signals for use between Tugs and barges or Tugs and Self Propelled Vessels when Berthing*

Instruction No. 1198.001, *Work Around Offshore Producing Facilities*

Instruction No. 1198.002, *Operating Procedures for Rig-Supply Vessels & Standby Boats*

2.3 General Requirements

2.3.1 Basic safety rules and requirements shall apply to offshore locations, such as but not limited to: work permits, use of personal protective equipment (PPE), use of portable power and hand tools, etc. See Chapter I-4, *Work Permit System*, Chapter I-3, *Personal Protective Equipment (PPE)*, and Chapter I-11, *Hand Tools and Power Tools*, etc.

2.3.2 The person in charge (PIC) (e.g., master, captain, officer-in-charge) is responsible for safety onboard the boat/vessel/barge at all times.

2.3.3 Visitors to marine vessels shall first report directly to the PIC. Visitors shall provide the PIC with any requested information, including swimming ability.

2.3.4 The PIC shall provide visitors with a safety orientation. This safety orientation shall include, but not be limited to: alarm signals, designated assembly areas, present and anticipated sea conditions, life rafts, location of personal flotation devices (PFDs), fire station locations, and emergency procedures.

2.3.5 Personnel, including visitors, on marine vessels shall be provided and trained in the use of PFDs. PFDs shall be fully functional with no defects.

2.3.6 PFDs shall be worn when boarding or disembarking marine vessels or when instructed by the PIC.

2.3.7 Personnel boarding a marine vessel from a shore/pier facility shall be provided with safe access to the vessel.

2.3.8 Personnel shall not board nor disembark marine vessels from offshore rigs, platforms, or boat landings until the PIC has given permission to do so.

2.3.9 Personnel shall not go outside the marine vessel's guardrail, unless authorized by the PIC.

2.3.10 Personnel on marine vessels shall be notified about slippery surfaces, newly painted decks, and wet or oily decks.

2.4 Preparation for Transportation by Sea

2.4.1 Unsecured materials and equipment on marine vessels shall be properly fastened or stored to prevent movement. Additional means of securing materials and equipment shall be utilized during rough weather.

2.4.2 Tarpaulins or plastic coverings over materials and equipment shall be of adequate strength and well-secured.

2.4.3 The SA Marine Department shall be informed in advance of any hazardous cargo (e.g., acids, explosives, flammable liquids, or gases) or cargo with special characteristics (e.g., sensitive to water, delicate, or high value).

2.4.4 Information on cargo weights and measurements, etc., shall be provided for any shipment that requires a manifest per MIM 1186.503.

2.5 Personnel Basket Transfer (e.g., "Billy Pugh")

2.5.1 Use of a personnel basket (e.g., "Billy Pugh") to transfer workers shall be performed per GI 7.024. See Figure 2.1.

2.5.2 Personnel shall wear snugly fitted and securely fastened PFDs (Type-I life jackets) during personnel basket transfers.



Figure 2.1 Personnel Transfer Via "Billy Pugh" Basket

2.5.3 Personnel to be transferred shall be positioned on the marine vessel deck or platform as directed by the crew.

2.5.4 Luggage shall be placed in the bottom center of the basket. Only personal articles shall be transferred in the personnel basket; no equipment or tools are permitted.

2.5.5 Prior to the basket lift, personnel shall place one foot on the outside rim of the basket (keeping the other foot on the deck) and grasp the basket's ropes securely with both hands. They shall maintain a firm grasp with their hands and keep their knees slightly bent.

2.5.6 Personnel shall be prepared for unexpected movement of the basket, particularly in rough seas. As the basket is lifted off the boat deck, personnel shall step onto the outside rim of basket with their remaining foot. They shall not lean in or out, but stand upright.

2.5.7 Personnel basket transfers shall not be conducted when the wind speed exceeds 25 km/h (15 mph, 14 knots) or in rough weather.

2.6 Swing Rope Transfer from Boat to Landing

Personnel shall not attempt swing rope transfers unless properly trained. Training shall be documented. When swing rope transfers are performed, personnel shall:

A. Follow all directions provided by the PIC.

B. Properly don (wear) a PFD.

C. Face towards the landing they are approaching.

D. Not carry luggage, tools, or equipment.

E. Grab the knotted rope when the marine vessel is on top of a swell and swing to the landing by using their feet to push off from the vessel.

F. Assist in the transfer of others by swing rope if directed by the PIC.

2.7 Working On, Over, or Near Water

2.7.1 Personnel working on, over, or near water shall wear approved PFDs per GI 6.020, unless prevented from falling into the water by a fall protection system (e.g., complete guardrail system or personal fall arrest system). See Chapter II-5, *Fall Protection*.

2.7.2 When conditions require use of both a personal fall arrest system and a PFD, an assessment shall be conducted to determine the most practical means of protection (e.g., PFDs may be sufficient when working at a relatively low height over deep water, PFDs may not be required when working high above the water when a PFAS will prevent falling into the water, or both PFAS and PFDs need to be worn).

2.7.3 PFDs shall be inspected by the user prior to use.

2.7.4 If anyone falls in the water, immediately shout “man overboard!” Available personnel shall assist in the rescue as directed by the PIC.

2.7.5 Personnel shall be fitted with and use a full-body harness and lanyard if needed. See Chapter II-5, *Fall Protection*.

2.7.6 Life rings shall be available at work locations for rescue operations.

2.7.7 Personnel shall never be alone when working on, over, or near water.

2.8 Housekeeping

2.8.1 Tools shall be properly cleaned and stored after use.

2.8.2 Spilled grease or oil shall be immediately cleaned up.

2.8.3 Hoses and ropes shall be coiled or hung to remain clear of walkways, stairs, and working surfaces.

2.8.4 Doors and drawers shall be secured.

2.8.5 Trash cans and ashtrays shall be used. Rubbish or trash (e.g., rags, papers, plastics, cigarette butts, scraps) shall not be discharged into the sea.

2.8.6 Domestic waste shall be brought onshore for treatment and disposal per MIM 1186.506, MIM 1186.509, and SAES-S-007.

3. Drilling and Well Servicing

For specific information relevant to workover rigs, well control, onshore wireline and coiled tubing activities, please refer to the referenced manuals or contact the Drilling and Workover organizations.

3.1 References

Saudi Aramco General Instructions (GIs):

GI 2.100, *Work Permit System*

Drilling and Workover Documents:

Loss Prevention Manual

Safety Requirements for Drilling and Workover Rigs

Drilling Manual

Workover Manual

Well Control Manual

Saudi Aramco Onshore Wireline Manual

Saudi Aramco Coiled Tubing Manual

4. Aviation

4.1 Purpose

This chapter describes minimum safety requirements for transportation of passengers and cargo on Saudi Aramco (SA) aircraft.

4.2 References

SA General Instructions (GIs):

GI 1310.000, *Transportation of Dangerous Goods Onboard Saudi Aramco Aircraft*

GI 1310.001, *Procedures for Carriage of Cargo on Saudi Aramco Aircraft*

GI 1310.003, *Procedures for Passengers Traveling on Saudi Aramco Aircraft*

SA Safety Handbook, *Minimum Safety Rules*

International Air Transport Association (IATA):

Dangerous Goods Regulations

4.3 General Operating Responsibilities

4.3.1 Pilot in Command (PIC)

A. The PIC is responsible for the safety of the aircraft, passengers and cargo. They shall ensure the aircraft is airworthy and weather is acceptable for flight. They shall be the final authority for "Go" or "No Go" decisions regarding the aircraft, passengers and cargo.

B. Maximum allowable cabin baggage (i.e., carry-on luggage) weight for fixed wing aircraft is 9 kg (20 lb) per passenger. The PIC has the right to reject any excess luggage.

C. The PIC is authorized to make decisions which require immediate action in the interest of safety. Passengers shall follow their instructions.

4.3.2 Other Responsibilities

A. Supervisors in remote areas shall familiarize themselves with all relevant instructions on the movement of aircraft to and from their areas.

B. SA proponent organizations (SAPOs) shall follow all Aviation Department safety rules.

4.4 General Boarding and Flight Safety Requirements

4.4.1 Prior to boarding, passengers shall declare to Aviation Department personnel all items in their checked luggage or carry-on baggage that might be considered dangerous goods. A "Dangerous Goods Declaration Form" shall be filled out and submitted, when applicable, at the check-in counter.

4.4.2 The flight crew shall orally brief passengers and direct their attention to the aircraft safety instructions prior to departure.

4.4.3 Passengers shall never approach an aircraft for boarding unless directed to do so by aviation personnel. They shall keep clear of props and engines at all times.

4.4.4 A flight crew member or designated safety observer shall monitor passenger movement while boarding and disembarking. Pilots shall not take off without first verifying that the ramp area is clear and other aircraft are in a safe location.

4.4.5 Smoking is prohibited onboard all SA aircraft and at aviation ramp and apron areas.

4.4.6 Mobile phones shall not be used onboard the aircraft while in flight nor at aviation ramp and apron areas.

4.4.7 Carry-on baggage shall be stored in approved compartments.

4.4.8 Seat belts shall be fastened while seated during all flights. Seat belts shall not be unfastened until the aircraft has come to a complete stop and aircraft crew members instruct passengers that it is safe to remove their seat belts.

4.4.9 Passengers shall remain seated in an upright position during takeoff and landing.

4.4.10 Hearing protection shall be supplied by aviation personnel as needed.

4.4.11 Passengers shall comply with all flight crew instructions.

4.4.12 Passengers violating instructions of the PIC, flight crew or aviation personnel shall be denied transportation on SA aircraft and may be subject to termination of employment and/or legal prosecution.

4.4.13 After landing, passengers shall remain seated until after the aircraft has come to a complete stop.

4.4.14 Passengers shall not attempt to retrieve carry-on baggage while the aircraft is in motion.

4.4.15 In the event of an emergency landing, the PIC, crew and passengers shall stay in close proximity to the aircraft, provided it is safe to do so. The PIC shall direct rescue/survival activities.

4.5 Transportation of Dangerous Goods

4.5.1 Shippers and passengers intending to transport dangerous goods on SA aircraft shall comply with applicable IATA Dangerous Goods Regulations. Refer to GI 1310.000 for further requirements.

4.5.2 Questions on transportation of dangerous goods shall be addressed to the aviation safety officer(s) or the terminal supervisor at the nearest SA airfield terminal.

4.6 Hours of Operation for Single-Pilot Helicopters

Normal operating hours for single-pilot helicopters shall be from sunrise to sunset. Single-pilot helicopters are required to be at their final destination prior to sunset.

4.7 General Precautions for Helicopters

4.7.1 The pilot is responsible for the helicopter and its passengers. The pilot's instructions shall be followed at all times.

4.7.2 Each passenger traveling aboard a helicopter shall carry a valid SA Helicopter Passenger Safety Certificate.

4.7.3 Each passenger traveling offshore on a helicopter shall carry a valid Helicopter Underwater Egress Training (HUET) certificate.

4.7.4 Loose clothing shall not be worn on helicopters, as it may entangle or impede exit or flotation. Thobes, ghutras, caps and sandals/slippers shall not be worn when traveling in helicopters.

4.7.5 Personnel shall keep clear of the helipad until the helicopter has landed.

4.7.6 Personnel shall approach and depart a helicopter only when cleared by the helicopter pilot, authorized ground crew or helicopter loading officer (HLO).

4.7.7 Personnel shall remove hats and keep a firm grip on all hand carried articles when walking to and from a helicopter. Carry long objects horizontally and below waist level.

4.7.8 Personnel shall approach and depart a helicopter from the 3 or 9 o'clock positions to stay clear of the main and tail rotors and remain in full view of the pilot. This is extremely important for small helicopters, due to the low elevation of the rotor system at the 12 o'clock position. Use the safe green zones as shown in Figure 4.1.

4.7.9 Personnel shall stoop down (i.e., duck their head and shoulders) when approaching or departing a helicopter.

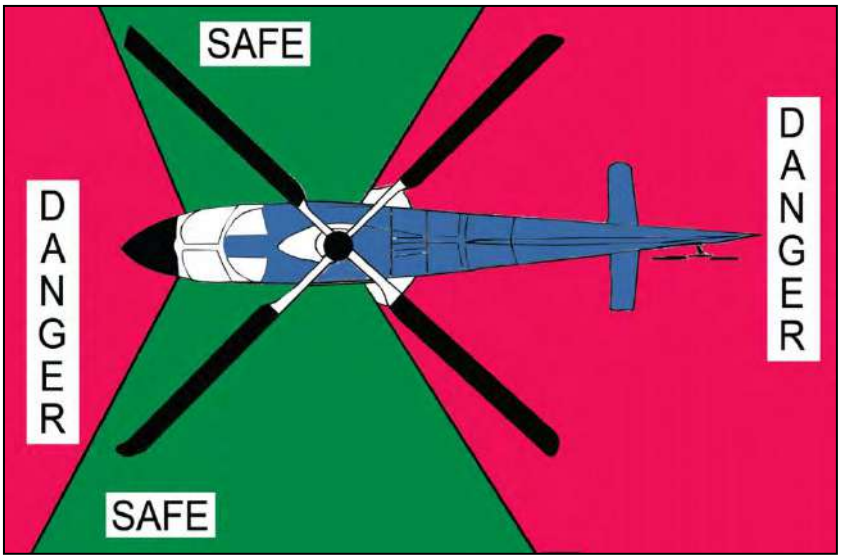

Figure 4.1: Helicopter Approach Zones

4.7.10 Carry-on items shall not be allowed in the passenger cabin. This includes newspapers and books. They shall be loaded in a baggage compartment.

4.7.11 Personnel shall not walk around the rear of a helicopter.

4.7.12 When visibility is reduced by dust, fog or other conditions, personnel shall exercise special caution to remain clear of the main and tail rotors.

4.7.13 SA Aviation-approved personal flotation devices (PFDs) shall be worn when traveling over water. Only PFDs provided in the helicopter shall be used.

4.7.14 Life vests shall not be inflated inside the helicopter. Inflate after emergency exit per flight crew instructions.

4.7.15 Proper hearing protection provided by SA Aviation shall be worn on all helicopter flights.

4.7.16 Seat belts shall be worn at all times.

4.7.17 Objects shall never be thrown from a helicopter.

4.7.18 Passengers shall not be allowed in the helicopter during refueling operations.

Saudi Aramco
Construction Safety Manual

Introduction

Saudi Aramco is committed to the prevention of incidents to minimize loss of life and bodily injury to its employees and contractor/subcontractor employees, prevent damage to physical assets and protect the public against hazards resulting from its operations. As such, Saudi Aramco considers safety to be no less of a priority than other business considerations, including schedule and cost.

In support of this commitment, the Saudi Aramco Loss Prevention publishes the Saudi Aramco *Construction Safety Manual* (CSM). This is the fifth edition of the CSM since its introduction in 1974.

This edition of the CSM is divided into two volumes. Volume One is entitled the *Contractor Safety Administrative Requirements* (CSAR). Volume Two is entitled the *Work Site Safety Manual* (WSSM).

The purpose of the CSAR is to establish Saudi Aramco's contractual requirements for management of safety by the contractor company. Thus, the audience for the CSAR is contractor company corporate and site management, not workers at the job site.

The purpose of the WSSM is to establish minimum safety-related requirements for job-site activities. As such, the audience for the WSSM is Saudi Aramco and contractor/subcontractor workers and their supervision at the work site.

The scope of the WSSM includes all construction, operations and maintenance work performed by Saudi Aramco (SA), contractor and subcontractor personnel within SA facilities, on SA project sites and at project support facilities covered under SA Land Use Permits, including laydown yards. The WSSM expands upon Saudi Aramco's minimum safety rules in order to assist Saudi Aramco proponent departments and contractors perform their day-to-day work activities safely.

The basis for many requirements in this manual is in the reference section of each chapter. Use of a reference is mandatory when it is specifically adopted by a section in this manual. Other references are to be used for additional guidance as needed.

In the event no other Saudi Aramco general instruction, engineering standard, policy or procedure exists that addresses a particular hazard, then this manual shall govern. In case of conflicting requirements, the applicable Saudi Aramco general instruction(s) or engineering standard(s) shall take priority over this manual.

The petroleum/gas industry and its work environment are in constant change due to the development of new technologies, processes, regulations and the identification of new hazards/risks. Consequently, these changes necessitate continual review and updating of Saudi Aramco's safety requirements and standards. The Loss Prevention will issue interim revisions to this manual as appropriate.

Index

Abrasive blasting — II-8 pages 1-5

Air compressors, portable — III-2 pages 4-5

Asbestos — CSAR page 24, **I-3** page 6, **I-4** page 2, **I-10** pages 1,10,11, **II-1** page 8, **II-8** page 14**, II-14** page 1

Atmospheric gas testing — I-4 page 5, **I-6** pages 3,8,9, **II-1** page 9

Aviation — IV-4 pages 1-4

Blinding — I-5 pages 1,5-7, **I-6** page 8

Blind lift — III-7 page 10

Brazing — I-3 page 4, **I-9** page 2, **II-1** page 12, **II-10** pages 1-4

Chemical Hazard Bulletin (CHB) — I-10 page 2, **II-9** page 2

Coating — I-6 page 11**, II-1** page 12, **II-2** pages 1,2,5, **II-7** page 6, **II-8** page 1, **II-9** pages 1-4**, II-10** Page 2

Cofferdams — II-12 pages 1,4,5

Cold work permit — CSAR page 10, **I-4** pages 2,3,5,7, **I-6** page 1, **II-14** page 3

Compressed gas cylinder — I-9 pages 1-4

Concrete — II-6 pages 1-12

Concrete mixers — III-2 pages 8-9

Confined space entry permit — I-4 pages 3,5, **I-6** pages 1,2,5,7,13, **II-1** pages 1,3,39

Confined spaces — I-6 pages 1-16

Cranes — II-12 pages 1-5, **III-7** pages 1-11

Critical Lift Plan — III-7 pages 6-8

Critical lifts — II-7 page 2, **III-7** page 1

Cutting — II-10 pages 1-10

Demolition — II-14 pages 1-4

Dewatering — II-1 pages 4,12, **III-4** pages 1,5

Diving operations — IV-1 pages 1-7

Drilling — IV-3 page 1

Electrical equipment — III-3 pages 1-19

Electrical generator, portable — III-2 pages 5-6

Electrical lockout and tagout — I-5 pages 1-4

Emergency reporting — I-1 pages 1-3, **I-13** pages 1-2

Emergency Response Plan — CSAR pages 14,21,34, **I-1** page 1, **I-6** page 13

Equipment isolation — I-5 pages 1-8**, I-6** page 3

Excavation — II-1 pages 1-40

Excavators — II-1 page 4, **III-2** page 7, **III-3** page 9

Explosive materials — II-13 page 1

Eye protection — **I-3** pages 3-4, **II-6** pages 8,9

Fall protection — I-6 page 8, **II-5** pages 1-10, **II-7** pages 3-4

Fire extinguisher — CSAR pages 12, 41,46,49, **I-6** pages 2,6,8, **I-7** pages 1-9, **I-9** page 3**, I-10** page 3, **II-1** pages 1,2, **II-9** page 2, **II-10** page 2, **III-2** pages 2,6

Fire prevention — I-7 pages 1-11

Firefighting equipment — CSAR pages 4, 41, **I-7** pages 1,2,7,8, **I-12** pages 1,3

Flammable liquids and gases — I-7 pages 4-7

Footwear — I-3 pages 1,5, **I-11** page 1

Forklifts — I-12 page 6, **III-2** pages 5-7

Formwork — I-4 page 3, **I-11** page 5, **I-12** page 6, **II-6** pages 1-7

Gloves — CSAR page 9, **I-3** pages 4-5, **I-6** page 8, **I-10** pages 11,13,14, **I-11** pages 1,6, **II-8** page 4 **II-9** page 5, **II-10** pages 3,5, **II-11** page 2, **II-12** pages 1,4, **II-14** page 3, **III-3** pages 1,3,4 **IV-1** page 2

Ground fault circuit interrupter (GFCI) — I-6 page 3, **I-11** page 7, **III-2** page 5

Hand tools — I-11 pages 1-18

Hard hat — CSAR pages 9,29, **I-3** pages 2,3, **I-8** page 2, **I-11** page 1, **II-9** page 5, **II-12** page 1 **II-14** page 3

Hazard — Introduction, CSAR pages 3,6-11,13,17-21,24-27,30-31,38,42-44, **I-3** pages 1-9, **I-4** pages 1-6, **I-5** pages 1,3,5,6,7, **I-6** pages 3-13, **I-7** pages 2,3,5,6,7,8, **I-8** page 2, **I-9** pages 3,4, **I-10** pages 1-13, **I-12** pages 4,6-7, **I-13** pages 1,3,6, **II-1** pages 3,7,8,12, **II-2** pages 11,12,14, **II-3** page 2, **II-4** pages 2,4, **II-5** pages 3-5,10 **II-6** pages 2,4,7,12, **II-7** pages 1-2,4,6,8,10, **II-8** page 1, **II-9** pages 1-4, **II-10** pages 7-8, **II-11** page 1, **II-12** page 5, **II-14** pages 1,2, **III-3** pages 1-2,7,8,10,16, **III-4** Pages 2,8, **III-7** pages 2,6,7,8, **IV-2** page 1,3,

Hazardous materials — I-10 pages 1-14, **II-1** page 8

Hearing protection — CSAR page 9, **I-3** page 6, **I-11** pages 1,4, **II-8** pages 3-4, **III-2** page 8, **III-4** pages 2,4

Heat stress — I-6 page 4, **I-13** pages 1-11

Helicopters — IV-4 page 3

Hot work permit — CSAR page 10, **I-4** pages 2,5, **I-6** pages 1,3-4, **I-11** pages 7-8, **II-10** page 1, **II-14** page 3, **III-2** pages 1-2, **III-6** page 2

Housekeeping — CSAR pages 25,43, **I-7** pages 8-9, **II-4** page 1

Hydrogen sulfide — CSAR page 28, **I-4** page 5, **I-6** page 10, **I-10** page 1

Ignition source — I-7 pages 3-4

Incident reporting and investigation — I-2 pages 1-2

Indoor storage — I-4 page 5, **I-7** page 3

Ionizing radiation — III-5 pages 1-3

Isolation plan — I-5 pages 1-7, **I-6** page 8

Ladders — II-3 pages 1-7

Lock/hold tag — I-5 pages 1-5

Machine guarding — III-1 pages 1-3

Manbasket — CSAR page 4, **II-5** pages 1,8, **II-7** page 1, **III-7** pages 1,8-10

Marine operations — IV-2 pages 1-5

Masonry — I-11 pages 10,11, **II-6** pages 1,2,11,12, **II-14** page 2

Material safety data sheet (MSDS) — I-10 page 2, **II-9** page 2

Materials handling — I-12 pages 1-7

Mechanical and heavy equipment — III-2 Pages 1-8

Mercury — I-10 pages 9,12-14

Motor vehicle accident (MVA) — I-8 page 3

Naturally occurring radioactive material (NORM) — I-6 page 4, **I-10** pages 1, **III-5** page 1

Near miss — CSAR pages 15,17,22, **I-2** pages 1,2,

Non-destructive testing (NDT) — III-6 pages 1-4

Off-road driving — I-8 pages 4

On-job injury — I-2 pages 1-2

Outdoor storage — I-7 pages 2,5

Painting — II-9 pages 1-9

Personal Protection Equipment (PPE) — I-3 pages 1-10, **I-6** pages 3,6-8, **I-10** pages 2,11,13-14, **I-11** pages 1,11, **I-12** page 5, **II-10** pages 3-4

Piling — II-12 pages 1-6

Power lines, overhead — III-3 pages 7-18

Power Operations Department (POD) — I-5 page 7

Power tools — CSAR pages 26,27, **I-6** page 4, **I-7** page 4, **I-11** pages 1,5-7, **II-4** page 2, **II-6** page 12, **II-9** pages 2,4, **III-1** page 1, **III-2** page 5, **III-3** pages 2-4,7, **IV-2** page 2

Pressure testing — III-4 pages 1-8

Release of hazardous liquids or gases permit — I-4 pages 2,5, **I-10** page 7

Respiratory Protection Equipment (RPE) — I-3 pages 7-10, **I-10** pages 2,7,13, **II-10** page 3

Rigging — CSAR pages 4,27,45, **I-12** page 6, I**I-7** page 1, **II-10** page 8, **III-2** page 1, **III-3** page 11 **III-7** pages 1-3,6,9-10, **III-8** pages 1-7, **IV-2** page 1

Roadworks — II-11 pages 1-2

Safety glasses — CSAR page 3, **I-3** pages 2-4,8, **I-6** page 8, **I-11** pages 1,11, **II-8** page 4, **II-9** page 5, **II-12** page 1, **II-14** page 3, **III-3** page 3

Scaffolding — II-2 pages 1-86

Self Contained Breathing Apparatus (SCBA) — I-3 page 7, **I-4** page 6, **I-6** page 5, **I-9** page 4, **I-10** pages 7-9

Shoring — CSAR pages 12,13, **II-1** pages 1-40, I**I-2** pages 1,8,9,17, **II-6** pages 1-5, **II-14** page 3, **III-5** page 2, **III-6** pages 1,3,4, **IV-1** page 2

Site layout — CSAR pages 19,37,38, **I-7** page 2

Slings — III-8 pages 1-14

Soil — I-3 page 5, **I-10** page 11, **I-12** Page 6, **II-1** pages 2-21, **II-11** page 1, **II-12** pages 2,4,5, **III-3** pages 15,16

Standby man — I-6 pages 2,3,6,7,15, **II-1** pages 9,12

Steel erection — II-7 pages 1-10

Stepladders — II-1 page 8, **II-2** pages 15,20, **II-3** pages 1,2,4-6, **II-4** page 1, **III-2** page 8

Storage — CSAR pages 19,27,34,35,37,38,39,41,43,44,45,49, **I-3** pages 2,8, I**-7** pages 2,3,5,6,7,8, **I-9** pages 1-3 **I-10** pages 1,5,6,14, **I-12** pages 1,2,3,17,18, **I-11** pages 1-4, **I-12** pages 2-4, **II-1** pages 12,13, **II-5** page 4, **II-6** pages 2,4, **II-7** pages 1,3, **II-8** page 5, **II-9** pages 2,4, **II-10** page 5, **II-13** page 1, **II-14** page 5, **II-9** pages 2,4

Tarring — II-9 pages 4-5

Temporary walking and working surface — II-4 pages 1-5

Traffic safety — I-8 pages 1-4

Trucks — II-6 page 8, **III-2** page 7

Vehicle safety — CSAR pages 4,13,19, **I-8** pages 1-4, **II-1** page 9

Ventilation — CSAR pages 38,48, **I-3** page 3, **I-6** pages 2,3,9,11-13, **I-7** page 7, **I-10** pages 2,6,10,13 **I-11** page 18, **I-13** page 3, **II-9** page 3

Welding — CSAR pages 19,21,24,27,30,37, **I-3** pages 4,6, **I-4** page 2, **I-6** page 9,11,12, **I-7** page 2,4,7 **I-9** pages 2,12, **II-1** pages 9,12,14,29, **II-4** page 2, **II-5** pages 4, I**I-6** page 9,10, **II-7** page 6, **II-9** pages 1, **II-10** pages 1-10, **II-14** page 4, **III-4** page 1, **III-7** page 4,10, **IV-1** page 2

Well servicing — IV-3 page 1

Work permit — I-4 pages 1-6, **I-6** pages 1-10, **II-1** pages 1-3,

Glossary of Terms

Absorbed Dose
Average amount of energy imparted by radiation per unit mass of matter in units of Gray (Gy), where 1 Gy =1 Joule/kg.

Accepted Engineering and Construction Practices
Practices developed internationally recognized industry organizations such as, but not limited to: American Society of Testing Methods (ASTM), American Society of Mechanical Engineers (ASME), National Electrical Code (NEC), American National Standards Institute (ANSI), etc.

Acclimatization
The process of an individual adjusting to a change in environment, such as temperature.

Air Tugger
Air-operated hoisting winch used extensively on drilling rig floors for rigging and hoisting into derricks, etc.

Anchor Point/Anchorage
Point of attachment for fall protection lifelines, lanyards or deceleration devices that is able to safely support the forces generated in arresting a person's free fall.

Angle of Repose – Excavation
The maximum slope, measured in degrees from the horizontal, at which loose material (e.g., sand or gravel) will remain in place without sliding.

Asbestos
A fibrous carcinogenic silicate material containing any of the following minerals: crocidolite, amosite, chrysotile, fibrous anthophyllite or any mixture containing these minerals.

Asbestos-Containing Materials (ACM)
Any material containing asbestos, such as, but not limited to: cement sheeting, molded insulation, gaskets, ropes, blocks, fire resistant boards, etc.

Authorized Person
A person approved by management to provide a specific service or duty based upon their experience, knowledge and/or education.

Base Plate – Scaffold
A steel plate providing a flat bearing surface for distributing the load from scaffold posts (standards). It has an integral spigot and fixing holes for use with sills.

Bearer (Transom) – Scaffold
A horizontal, transverse scaffold member that may support platform units and which is supported by at least two runners (ledgers) or connected directly to at least two posts (standards).

Benching – Excavation
A method of protecting personnel from cave-ins by digging the sides of an excavation to form one or more of a series of horizontal steps, with a vertical rise between each step.

"Billy Pugh" Basket
Rope basket with a canvas or other flexible material base supported by a solid ring on which personnel stand for transferring from boat to platform and vice versa. Also referred to as a Personnel Carrier.

Birdcaging
When the wire rope strands of a wire rope sling are forcibly untwisted and become spread outwards, forming what looks like a bird cage.

Blind Lift
A crane lift in which there is no direct visual contact between the crane operator and the signalman, usually the rigger.

Board Bearer (Intermediate Transom)
A horizontal transverse scaffold tube upon which the scaffold platform partially rests. Board bearers are supported by runners (ledgers) and are not installed near a transverse line of posts (standards).

Body Belt (Safety Belt)
A strap secured about the waist used to provide personnel positioning limits against a fall (i.e., when climbing a pole or tree). Body belts shall not be used as part of a personal fall arrest system.

Box Tie – Scaffold
An assembly of tubes and couplers forming a frame around a column or other part of a building to provide an anchor point for scaffold tie tubes. Also known as a column box tie.

Brace – Scaffold
A rigid connection of scaffold tubing that holds one scaffold member in a fixed position with respect to another member to provide rigidity and/or stability to the scaffold.

Cross Bracing
Two diagonal braces joined at their center to form an "X." Also referred to as "X" bracing or cross-braces.

Diagonal Brace
A scaffold tube placed diagonally with respect to the vertical and horizontal members of a scaffold and subsequently fixed/attached to them to give the scaffold stability.

Longitudinal (Facade or Sway) Bracing
Diagonal braces installed in the plane of the longer dimension (length) of the scaffold.

Plan Bracing
Diagonal braces installed in a horizontal plane, normally used in mobile and tower scaffolds.

Transverse (Sectional or Ledger) Bracing
Diagonal braces installed in the plane of the shorter dimension (width) of the scaffold.

Zig-Zag (Dogleg) Bracing
Diagonal braces placed end-to-end and that alternate ("zig-zag") back and forth.

Bridging Clip
A device that is attached to the steel joist to allow the bolting of the bridging to the steel joist.

Buckle
A device for securing a full-body harness around the user's body.

Bulldog Grip
A U-shaped bolt used to connect two strands of the same wire rope in order to create a loop. Also known as a Crosby clip.

Caster (Castor) – Scaffold
A pivoting wheel, with a corresponding wheel lock, which is attached to a vertical post (standard) of a mobile scaffold to allow for manual movement of the scaffold.

Chain Fall
A hoist device consisting of a loop of operating chain that one pulls through the block which then activates the block (lift-wheel) to take up the main lifting chain to lift objects/loads.

Chocks
Wedges of sturdy material placed behind and in front of a vehicle's wheels to prevent unintentional movement.

Choker
A wire rope or synthetic fiber rigging assembly that is used to attach a load to a hoisting device.

Cofferdam
A temporary enclosure within a water environment constructed to allow water to be displaced in order to create a dry work environment.

Cold Forming
The process of using press brakes, rolls or other methods to shape steel into the desired cross section at room temperature.

Column
A load-carrying vertical member that is part of the primary skeletal structural framing system. Columns do not include posts.

Combustible Material
A substance that can be burned. A combustible liquid is defined as a liquid that has a flash point greater than 54 °C (129 °F).

Come-a-long
A hand powered hoist with a ratchet wheel. Also known as a "ratchet lever hoist."

Competent Person
A person who have and is able to successfully demonstrate to Saudi Aramco's satisfaction that they have the knowledge, training and experience to properly solve or resolve problems relating to the subject matter and work.

Competent Person – Excavation

A person who has and is able to successfully demonstrate the following:

1. Documented training, experience and knowledge of:
   a. Soil analysis.
   b. Use of shoring and other excavation protective systems.
2. Ability to detect:
   a. Conditions that could result in sidewall cave-in.
   b. Failures in excavation protective systems.
   c. Other excavation-related hazards, including those associated with confined spaces and dewatering.
3. Written authority to take prompt corrective measures to eliminate existing and predictable hazards.

Concrete Shoring (or Falsework) – Formwork

Temporary vertical support members, excluding the formwork, designed to carry the weight of the formwork, concrete and construction loads.

Confined Space

Any space that:

1. Has limited or restricted means of entry or exit.
2. Is not designed for human occupancy.
3. Contains or has the potential to contain a hazardous atmosphere.
4. Contains any other recognized serious safety or health hazard(s).

Examples of confined spaces include tanks, vessels, vessel skirts, vaults, manholes, sewers, valve boxes and structures or excavations 1.2 m (4 ft) deep or deeper. Areas above floating roof tanks where the top of the roof is more than 1.2 m (4 ft) below the rim of the tank are also considered confined spaces.

Connector (Fall Protection)

A device used to couple (connect) parts of a personal fall arrest system together. It may be an independent component of the system, such as a carabiner, or an integral component of part of the system, such as a buckle or D-ring sewn into a full-body harness, or a snap hook spliced or sewn to a lanyard or self-retracting lifeline.

Connectors (Steel Erection)

Personnel working with hoisting equipment to place and connect structural members and/or components.

Constructability

The ability to properly erect structural steel members without having to alter the overall structural design.

Construction Load (for Joist Erection)

Any load other than the weight of personnel, joists and bridging bundles.

Contractor Safety Prequalification

A structured and systematic evaluation of a contractor company's safety management program and its implementation in order for the contractor to be "safety prequalified" to bid on specific types of work for Saudi Aramco.

Contractor Site Safety Program (CSSP)

A project-specific document which identifies, but is not limited to: work to be performed, management structure, hazard identification plan (HIP), and other job site safety management requirements as listed in the Contractor Safety Administrative Requirements (CSARP), which is Volume One of this manual. The

CSSP describes how the contractor will meet Saudi Aramco's safety requirements for the contracted work.

Controlled Area
An area where high levels of radiation exist or may exist during industrial radiographic operations.

Controlled Decking Zone (CDZ)
An area in which certain steel erection work (for example, initial installation and placement of metal decking) may take place without the use of guardrail systems, personal fall arrest systems, fall restraint systems or safety net systems, and where access to the area is controlled.

Controlled Load-Lowering
Lowering a load by means of a mechanical hoist drum device that allows the load to be lowered with maximum control using the gear train or hydraulic components of the hoist mechanism. Controlled load lowering requires the use of the hoist drive motor, rather than the load hoist brake, to lower the load.

Controlling Contractor
A prime contractor, general contractor or any other legal entity, which has the overall responsibility for the planning, quality, construction and completion of a project.

Coupler (Fitting, Clamp) – Scaffold
A component or device used to fix scaffold tubes together. Types of couplers include:

Adjustable (Swivel) Coupler
A device used for connecting two tubes together at an angle other than 90 degrees.

Bearer (Single or Putlog) Coupler
A device used for fixing a bearer (transom or putlog) to a runner (ledger), or to connect a tube used only as a guardrail to a post (standard).

Check (Safety) Coupler
A right-angle coupler added to a loaded joint on an underhung scaffold to provide supplementary security against slip to the coupler carrying the load.

End-to-End (Sleeve) Coupler
A device used for externally joining two scaffold tubes co-axially end-to-end. The steel divider is located centrally to ensure each scaffold tube inserts equally.

Girder Coupler
A device used for connecting a scaffold tube to a steel wide-flange beam (I-beam). Girder couplers shall only be used in pairs, one on each opposite flange.

Right-Angle (Double, 90 degree, Load Bearing or Standard) Coupler
A load bearing coupler used for connecting two tubes together at a right angle. It is a critical component in the scaffold structure and must resist both slip and distortion.

Crane, Fixed
Lifting equipment consisting of a rotating superstructure with a power plant, operating machinery and boom, mounted on a base and pedestal.

Crane, Mobile
Lifting equipment consisting of a rotating superstructure with a power plant, operating machinery and boom, mounted on a base and equipped with crawler treads for travel or mounted on a crane carrier equipped with axles and rubber-tired wheels for travel.

Crane Lift – Critical
Crane lifts that require an approved Critical Lift Plan (see GI 7.028 and Chapter III-7, *Cranes and Lifting Equipment*, of this manual).

Crane Lift – Standard (Ordinary)
Crane lifts not classified as critical lifts. Crane configuration shall be with the main boom only.

Crane Operator
A person certified by Saudi Aramco as being authorized to operate a specific model and capacity of crane, and who may also receive additional certifications for performing tandem lifts, pick and carry operations, using crane attachments, or conducting lifts using personnel platforms (manbaskets).

Critical Lift Plan
A document (SA Form 9644) that identifies a specific load and subsequent crane operating restrictions. Pertinent information includes crane capacity, rigging configuration and all weights on hook blocks and attachments.

Crosby Clip
See Bulldog Grip

D/d Ratio
The mathematical formula used to determine the rated load of each side of a sling bent over a support (shackle pin, hook, etc.). The D/d ratio is calculated by dividing the diameter of curvature around which the body of the sling is bent (D) by the diameter of the sling (d).

Dead Load – Scaffold
The total weight of erected scaffold components, including tubing, couplers, bracing and platform units (e.g., planks).

Dead-Man Switch
A device/switch that automatically stops a power tool or machinery if the human operator becomes incapacitated; is a form of fail-safe.

Deceleration Device
Any mechanism, such as a rope grab, rip-stitch lanyard, specially woven lanyard, tearing or deforming lanyard, or automatic self-retracting lifeline/lanyard, that serves to dissipate a substantial amount of energy when arresting a free fall or otherwise limits the force imposed on a person during fall arrest.

Deceleration Distance
The additional vertical distance a falling person travels, excluding lifeline elongation and free-fall distance, before stopping, calculated from the point at which the deceleration device begins to operate. It is measured as the distance between the location of a person's full-body harness attachment point at the moment of activation (at the onset of fall arrest forces) of the deceleration device during a fall and the location of that attachment point after the person comes to a full stop.

Decking Hole
A gap or void in a floor, roof or other walking/working surface that is more than 5.1 cm (2 inches) across at its smallest dimension and less than 30.5 cm (12 inches) across at its greatest dimension. Pre-engineered holes/openings in cellular decking (for wires, cables, etc.) are not included in this definition.

Degreed Civil or Structural Engineer
A person with a civil or structural engineering degree, from an internationally recognized 4-year university, who has successfully demonstrated experience in design and construction of concrete and steel structures, scaffolding and/or excavations.

Derrick Floor
An elevated floor of a building or structure designated to receive hoisted pieces of steel prior to final placement.

Disaster
When used in Saudi Aramco communications systems, a "disaster" warns personnel about the most serious form of emergency, where available resources, personnel and materials at the facility are insufficient to control the situation. The criteria for declaring an emergency a "disaster" shall be defined in the facility or area Emergency Response Plan(s).

Dose Limit
The value of the effective dose or the equivalent dose of radiation to individuals from controlled practices that shall not be exceeded.

Dosimetry
The calculation of the absorbed dose in matter and tissue resulting from exposure to ionizing radiation.

Double Connection
An attachment method where the connection point is intended for two pieces of steel, which share common bolts on either side of a central piece.

Double Connection Seat
A structural attachment that, during the installation of a double connection, supports the first member while the second member is connected.

Dunnage
Spare pieces of scrap wood.

Emergency
A situation that poses an immediate risk to health, life, property or the environment.

Equivalent
Alternative designs, materials or methods that the Saudi Aramco accepts will provide an equal or greater degree of safety for personnel than the methods, materials or designs specified in company/industry standards or in current use.

Equivalent Dose
The sum total of the average absorbed dose by a tissue or organ multiplied by a radiation weighting factor (WR) over different types of radiation (in mixed radiation fields). The unit of equivalent dose is the Sievert (Sv).

Erection Bridging
Bolted diagonal bridging required to be installed prior to releasing hoisting cables from steel joists.

Excavation
A man-made cut, cavity, trench or depression in the earth surface that is formed by earth removal.

Excavation Box
A structure that protects personnel inside it by being able to safely withstand the forces imposed by a potential sidewall cave-in on four sides.

Exposure Bunkers
Areas where compacted sand berms, concrete blocks, etc., are erected to shield NDT activities and provide controlled access by use of perimeter fences.

Fabricated Plank, Deck or Platform – Scaffold
A scaffold platform unit equipped with end hooks that engage the scaffold bearer (transom).

Failure
Load refusal, buckling, breakage, slippage or separation of scaffolding component parts. For a simply supported bending member (such as a bearer), load refusal may be taken as the point at which a full depth plastic hinge forms at the mid-span (plastic moment = yield stress times plastic section modulus).

Fall Arrest
The form of fall protection which involves the safe stopping of a person already falling.

Fall Protection
Any same-level means used to reasonably prevent exposure to an elevated fall hazard. Floors, walls, guardrails and area isolation are means of fall protection, as is a personal fall arrest system (PFAS). See Fall Arrest and Fall Restraint.

Fall Restraint
Personal protection that prevents persons who are in a fall hazard area from falling.

Fire Watch
An individual who:
- Is aware of the inherent hazards of the work site and of the hot work.
- Ensures that safe conditions are maintained during hot work operations.
- Has the authority to stop the hot work operations if unsafe conditions develop.
- Has fire extinguishing equipment readily available and is trained in its use.
- Is familiar with the facilities and procedures for notifying proper personnel in the event of a fire.
- Watches for fires in all exposed areas and tries to extinguish them only when the fire is obviously within the capacity of the equipment available. If the fire is not within the capacity of the extinguishing equipment, then the fire watch shall immediately notify proper personnel to activate emergency response.

Flammable (Explosive) Limits
The range of vapor/air concentrations of flammable liquids or gases which are potentially explosive.

Flammable Material
A liquid or gas with a flash point of 54 °C (129 °F) or less.

Flash Point
The lowest temperature at which a liquid will give off sufficient vapor to ignite when exposed to an open flame.

Foot Strap
See Suspension Trauma Safety Strap

Formwork
The system of support for freshly poured or partially cured concrete, including the mold or sheathing that contacts the concrete as well as its supporting members, hardware and bracing.

Free Fall
The act of falling before a personal fall arrest system begins to apply force to stop the fall.

Full-Body Harness
A design of straps that may be secured about a person in a manner to distribute the fall arrest forces over the thighs, pelvis, waist, chest and shoulders, with means for attaching the harness to other components of a personal fall arrest system.

General Instruction (GI)
A Saudi Aramco document containing minimum requirements on a specific topic.

Gin Pole
A hand-operated derrick which has a nearly vertical pole supported by guy ropes; the load is raised on a rope that passes through a pulley at the top and over a winch at the foot.

Girt (in Systems-Engineered Metal Buildings)
A "Z" or "C" shaped member formed from sheet steel spanning between primary framing and supporting wall material.

Grassroots Construction Project
A Saudi Aramco capital project for construction of a new plant/unit or facility that is under the control of Saudi Aramco Project Management (PM) and the construction contractor until startup/occupancy. A grassroots construction project is normally at a previously undisturbed site. However, a project located within an existing Saudi Aramco plant or facility is also considered to be a grassroots construction project if the Saudi Aramco proponent organization has turned over control of the project site to PM and the contractor until startup/occupancy.

Guardrail System
A barrier consisting of toprail (uppermost horizontal rail), midrail (horizontal rail approximately midway between the top rail and the platform), and toeboard (barrier secured around the bottom of a platform's sides and ends), with supporting uprights, erected to prevent personnel from falling off an elevated work area and to prevent objects from falling onto personnel below.

Guys
Tension members (i.e., wire ropes) used between the scaffold and the ground, building or structure to enhance the scaffold's lateral stability.

Hanger Tube – Scaffold
Vertical tube similar to, and serving the same load-carrying purpose as, posts (standards), except that hanger tubes are hung from an existing structure and loaded in tension.

Hazard Identification Plan (HIP)
A detailed and systematic identification of potential hazards such as, but not limited to: fire, explosion, impact, penetration, falls, equipment damage, chemical, heat, electrical, noise, inhalation, radiation, absorption and light (infrared/ultraviolet). It also prescribes steps necessary to mitigate the hazards.

Hazardous Atmosphere
Any atmosphere that may expose an individual to the risk of death, incapacitation, injury or acute illness from one or more of the following causes:

(a) Atmospheric oxygen concentration below 20% or above 23.5%.
(b) Flammable gas, vapor or mist in excess of 5% of its lower explosive limit (LEL).
(c) Atmospheric concentration of any substance (particulate, vapor, gas, etc.) greater than or equal to values that have been established as a permissible exposure limit (PEL) or recognized threshold limit value (TLV).
(d) Any other atmospheric condition that is immediately dangerous to life or health.

Hazardous (Classified) Location
Those areas where fire or explosion hazards may exist due to flammable gases or vapors, flammable liquids, combustible dust or ignitable fibers.

HAZCOM
Hazard materials communication as per Saudi Aramco General Instruction 150.100.

Headache Ball
A weighted hook that is used to attach loads to the hoist load line of a crane.

Hoisting Equipment
Commercially manufactured lifting equipment designed to lift and position loads. Hoisting equipment includes, but is not limited to: cranes, derricks, tower cranes, barge-mounted derricks or cranes, gin poles and gantry hoist systems. A "come-a-long" (mechanical device, see Come-a-Long) is not considered hoisting equipment.

Home Country Certification
A certification for non-Saudi Aramco marine personnel from a recognized international institution. Examples include, but are not limited to: ABS (Dubai), CITB (UK), Singapore Vocational & Industrial Training Board, US Navy, US Merchant Marine, Crane Tech (USA) and Emirate Safety Services.

Hot Stick
An insulated pole, usually made of fiberglass, used by workers when engaged in live-line working on energized high-voltage electric power lines.

Hot Surface
The surface of a structure or equipment that is hotter than 70 °C (160 °F).

Hydraulic Shoring – Excavation
A pre-engineered support system of aluminum hydraulic cylinders (cross-braces) used with vertical rods (uprights) or horizontal rods designed specifically to support side walls of an excavation to prevent a cave-in.

Immediately Dangerous to Life or Health (IDLH) Atmosphere
An atmosphere that poses an immediate hazard to life or poses immediate irreversible debilitating effects on health.

Incident
Undesired event or series of events that results or could have resulted in: death, injury, loss of process or damage to a system or service; vehicle and/or equipment damage or loss; environmental damage; and/or adversely affecting an activity or function. Also includes events such as a near miss, loss of property through theft, and/or incidental release of a hazardous substance.

Inspector, Certified Elevating/Lifting Equipment
A person certified by the Saudi Aramco Inspection Department to perform inspections and certifications on elevating/lifting equipment (For additional information, refer to Inspector, Scaffold Certification definition in GI 7.028 and GI 7.030).

Ionizing Radiation
Any type of radiation capable of removing an electron from the atom with which it interacts directly such as: gamma rays, X-rays, alpha particles and beta particles, or indirectly such as neutrons. Ionizing radiation consists of subatomic particles or electromagnetic waves that are energetic enough to detach electrons from atoms or molecules, thus ionizing them Examples of ionizing particles are energetic alpha particles, beta particles, and neutrons.

Issuer
Saudi Aramco employees who are selected by their division or department heads and certified per GI 2.100 by Saudi Aramco to issue work permits for restricted areas within their area of responsibility.

Jib
A tilted strut on a hydraulic crane that supports a fixed pulley block.

Job Explanation (Job X) Meeting
A meeting held by Saudi Aramco for Saudi Aramco-approved contractors for the purpose of communicating all relevant contractual and job scope information, including the safety, health, environmental and medical requirements, prior to bidding on any grassroots, renovation, upgrade and/or maintenance contracts.

Joint Pin (Expanding Spigot) – Scaffold
An expanding fitting placed in the bore of a scaffold post (standard) to connect one post to another coaxially. This device is used to connect posts (standards) in tube and coupler scaffolds vertically and handles compression loads, but not tension loads.

KACST
King Abdulaziz City for Science and Technology. The government regulatory agency responsible for supervising and controlling matters related to sources of ionizing radiation and its use in Saudi Arabia.

Kick-Off Meeting
A meeting held by Saudi Aramco and the bid winning contractor after the contract has been awarded and prior to start of work for the purpose of communicating all relevant contractual and job scope information, including Saudi Aramco safety, health and environmental requirements.

Ladder
A device used for climbing vertically between levels, including:

Extension Ladder
A portable ladder that cannot support itself but can be adjusted in length. It consists of two sections that are arranged to permit length adjustment.

Straight Ladder
A portable ladder that consists of one section that determines its overall length. It cannot support itself or be adjusted in length.

Land Use Permit (LUP)
A document used to request **permanent or temporary** use of a portion of Saudi Aramco's reservations and deeded lands for any specified purpose such as pipelines, flow lines, test lines, communication cables, power lines, burn pits, drilling island sites, GOSP sites, gas plant sites, roads, parking, offices, community building facilities, renovation and replacement of existing facilities, etc. This can include contractor camps/offices/storage sites, borrow pits or for any other temporary use.

Lanyard
A flexible line of rope, wire rope or strap that is used to secure the full-body harness to a deceleration device, lifeline or anchorage.

Lanyard (Shock-Absorbing)
A specially designed lanyard with a built-in shock absorber (to allow dissipation of energy) that elongates during a fall so that fall arresting forces are significantly reduced (e.g., by 65–80%) when compared to a traditional webbing or rope lanyard.

Leading Edge
The unprotected side and edge of a floor, roof, or formwork for a floor or other walking/working surface (such as deck) which changes location as additional floor, roof, decking or formwork sections are placed, formed or constructed.

Lifeline
A component consisting of a flexible line for connection to an anchorage at one end to hang vertically (vertical lifeline) or for connection to anchorages at both ends to stretch horizontally (horizontal lifeline) that serves as a means for connecting other components of a personal fall arrest system to the anchorage.

Lift – Scaffold
The assembly of runners (ledgers) and bearers (transoms) forming a horizontal level of a scaffold. A lift is similar to a floor in a building.

Lift (Base) – Scaffold
A lift erected near to the ground consisting of the first set of runners (ledgers) and bearers (transoms). Also known as a "foot lift," "foot tie" or "kicker lift."

Lift Head Room – Scaffold
The clear distance between a platform and the tubular assembly of the lift above.

Lift Height – Scaffold
The vertical distance between two lifts and is similar to a story in a building.

Live Load
The weight of personnel, tools and materials added to the dead load that the scaffold or formwork shall be designed to accommodate.

Load Rating
Live load for scaffold design and maximum intended loading shall be per the following categories:

Light-Duty:
Scaffold designed and constructed to carry the weight of personnel only, with no material storage other than the weight of tools. Commonly used for inspection, painting, access and light work. Uniformly distributed maximum intended load is 120 kg/m^2 (1.2 kN/m^2) (25 lb/ft^2).

Medium-Duty:
Scaffold designed and constructed to carry the weight of light materials, tools and personnel. Scaffolds used for abrasive blast cleaning ("sandblasting") shall be classified as medium-duty if there is potential for buildup of abrasive materials on the platforms (all platforms that are not continuously cleaned of abrasive). Uniformly distributed maximum intended load is 240 kg/m^2 (2.4 kN/m^2) (50 lb/ft^2).

Special-Duty:
Scaffold specially designed and constructed to carry maximum intended loads greater than 240 kg/m^2 (2.4 kN/m^2) (50 lb/ft^2), such as masonry work, piping or equipment, and is classified as a Special Scaffold (see GI 8.001).

Low-Boy
A semi-trailer that has an extremely low deck as compared to normal trailers.

Lower Explosive Limit (LEL)
The minimum concentration of flammable vapors in air that will ignite when exposed to an ignition source.

Lower Level
Areas below the level where personnel are located and to which they could fall. These areas include, but are not limited to: ground levels, floors, roofs, ramps, runways, excavations, pits, tanks, materials, water and equipment.

Machine Guard
A physical barrier between an operator and hazardous points on a machine. They prevent accidental injury and protect operators from flying debris, contaminants and noise.

Manbasket
See Suspended Personnel Platform

Marine Vessel
Includes transports such as, but not limited to: boats, vessels and barges.

Maximum Intended Load – Scaffold
The maximum load of all personnel, equipment, tools, materials, transmitted loads and other live loads reasonably anticipated to be applied to a scaffold or scaffold component at any given time (does not include scaffold or plank self-weight).

Metal Decking
A commercially manufactured, structural grade, cold-rolled metal panel formed into a series of parallel ribs; including metal floor and roof decks, standing seam metal roofs, other metal roof systems, and other products such checker plate, expanded metal panels and similar products. After installation and proper fastening, these decking materials serve a combination of functions including, but not limited to: structural elements designed in combination with the structure to resist, distribute loads, stiffen structures and provide diaphragm action; walking/working surfaces; forms for concrete slabs; supports for roofing systems; and finished floors or roofs.

Motor Vehicle Accident (MVA)
An incident involving a motor vehicle resulting in death, injury or property damage on a Saudi Aramco controlled location or involving a Saudi Aramco owned vehicle.

Mousing
A binding or metal shackle around the point and shank of a hook to prevent a load from slipping from an eye. Mousing is also the application of a safety wire to secure a threaded clevis pin to a shackle to secure the shackle in a closed position. Also known as a safety wire in this application.

Multiple Lift Rigging
A rigging assembly manufactured by wire rope rigging suppliers that facilitates the attachment of up to five independent loads (pieces of materials) to the hoist rigging of a crane. The smallest piece is rigged at the top.

Naturally Occurring Radioactive Material (NORM)
Naturally occurring (i.e., not man-made) primordial radioactive nuclides and their radioactive decay products, which have been enhanced above their natural levels due to industrial operations.

Near Miss
An event, or series of events, that under slightly different circumstances, could have resulted in personal harm, property or environmental damage. No negative consequences (e.g., injury, damage) resulted from the event.

Node Point – Scaffold
The intersection point of a post (standard) and runner (ledger), or a post (standard) and bearer (transom).

Occupationally Exposed Worker
Personnel whose job involves routine use of ionizing radiation sources and who has a reasonable chance of being exposed to an effective dose equal to or higher than 2 millisieverts accumulated over 1 year.

Opening
A gap or void in a floor, roof or other walking/working surface that is 5 cm (2 inches) or more across its smallest dimension

Operating Instruction
Departmental (in-house) step-by-step instruction/procedure to perform work. Examples of these are: Refinery Instruction Manual (RIM), Operating Instruction Manual (OIM), Gas Operations Instruction (GOI), Marine Instruction Manual (MIM), etc.

Operational Aid
A component that provides information to facilitate crane operations, or that takes control of particular crane functions without action by the crane operator when a limiting condition is detected.

Originator
The person who fills out the Critical Lift Plan form, prior to review and approval by a Saudi Aramco certified Rigger I. Only a Saudi Aramco certified Rigger I or Rigger II can be the originator.

Outriggers – Crane
Outriggers are extendable or fixed metal arms, attached to the crane's mounting base, which rest on supports at the outer ends. They are designed to increase the crane's base and thus increase stability during lifts.

Outriggers – Scaffold
The structural members of a supported scaffold used to increase the base width of a scaffold in order to provide support for and increase stability of the scaffold.

Outrigger Beam (Thrustout) – Scaffold
A cantilevered structural member that supports a scaffold where the point of attachment to the scaffold is out and away from the face of the structure or building.

Permanent Floor
A structurally completed floor at any level or elevation (including slab on grade).

Personal Fall Arrest System (PFAS)
A system used to arrest personnel in a fall from a working level. It consists of an anchorage, connectors and full-body harness. This system may also include a lanyard, deceleration device, lifeline or a suitable combination of these.

Plank (Scaffold Board) – Scaffold
An individual timber board or fabricated component (without end hooks) that serves as a flooring member of a platform.

Platform
An elevated work area composed of one or more platform units and a guardrail system.

Platform Unit
An individual wood plank, fabricated plank, fabricated deck or fabricated platform.

Positioning Device System
A full-body harness rigged to allow personnel to be supported on an elevated, vertical surface, such as a wall or column, and work with both hands free while leaning.

Post (Standard) – Scaffold
Vertical scaffold tube that bears the weight of the scaffold.

Post (Steel Erection)
An essentially vertical structural member with a longitudinal axis that: weighs 136 kg (300 lb) or less and is axially loaded (a load presses down on the top end); or is not axially loaded, but is laterally restrained by the above member. Posts typically support stair landings, wall framing, mezzanines and other substructures.

Procedure
A document which contains step-by-step instructions on how to perform a task(s).

Project Structural Engineer of Record
The registered, licensed professional responsible for the design of structural steel framing and whose stamp/seal appears on the structural contract documents.

Protective Systems – Excavation
Methods used to protect personnel from sidewall cave-in, materials that could fall or roll into the excavation, or collapse of adjacent structures. Protective systems include sloping, benching and shoring.

Public Exposure
Exposure incurred by members of the public from authorized radiation sources and practices and from intervention situations, excluding any occupational or medical exposure.

Puncheon (False Upright) – Scaffold
A vertical tube, supported at its lower end by another scaffold tube or beam, and not by the ground or deck.

Purlin (In Systems-Engineered Metal Buildings)
A “Z” or “C” shaped member formed from sheet steel spanning between primary framing and supporting roof material.

Push Stick
A safety tool that allows the user to keep their fingers away from a table saw or router’s blades.

Qualified Person
A person who has possession of a recognized pertinent degree or certificate of professional standing or who has successfully demonstrated to Saudi Aramco’s satisfaction that they have the knowledge, training and experience to properly solve or resolve problems relating to the subject matter and work.

Radiation Protection Officer (RPO)
An individual technically competent in radiation protection matters relevant to a specific radiation practice. This individual is licensed by the regulatory authority (KACST) and approved by the Saudi Aramco Radiation Protection Committee (RPC).

Radiation Safety Officer (RSO)
A person approved by the Saudi Aramco Inspection Department and licensed by the Saudi Arabian Government to conduct risk assessments and monitor radiation activities on Saudi Aramco work sites and facilities.

Radiation Survey
An evaluation of the production, use, release, disposal or presence of radiation sources to determine potential radiation hazards. It may include, but not be limited to: tests, physical examinations, measurements of radiation levels or observance of associated work practices.

Radiographic Film Interpretation (RTFI)
The process of interpreting radiographic film from non-destructive testing procedures.

Raker – Scaffold
An inclined load-bearing tube that braces the scaffold against the ground.

Raking Pile
A pile installed at an angle to the vertical. Also called a batter pile.

Rated Capacity (Load) Limiter (RCL)
A device that automatically monitors boom radius, load weight and load rating and prevents movement of the crane, which would result in an overload condition.

Receiver (Authorized Craftsmen/Supervisors)
Authorized craftsmen/supervisors, or other similarly qualified individuals, selected and certified by Saudi Aramco to sign and receive work permits. Saudi Aramco proponent organizations (SAPOs) shall approve the contractor's receivers.

Respirator
A personal device designed to protect the wearer from inhaling harmful dusts, fumes, vapors, and/or gases. There are two main categories: the air-purifying respirator, which forces contaminated air through a filtering element, and the air-supplied respirator, in which an alternate supply of fresh air is delivered.

Restricted Area
Those areas or activities that have been designated as requiring use of work permit procedures. These include, but are not limited to: areas where hydrocarbons, flammable liquids/gases or toxic materials are handled, stored, piped or processed in significant quantities. The following are some examples of restricted areas: petroleum and gas processing plants, pump stations, tank farms, loading piers, hydrocarbon pipeline corridors, oil and gas wells, water and gas injection wells, water or sewage treatment plants, bulk plants, marine vessels, fueling stations, areas where explosive or radioactive materials are used or stored, areas within 15 m (50 ft) of overhead power lines, and areas adjacent to high voltage equipment. Contractor work permits are used where the SA work permit system does not apply.

Reveal Pin – Scaffold
A fitting used for tightening a scaffold reveal tube between two opposing surfaces.

Reveal Tie – Scaffold
An assembly of a reveal tube, reveal pin and pads, if required, fixed between opposing faces of an opening in a wall to provide an anchor point for scaffold tie tubes.

Reveal Tube – Scaffold
A tube fixed by means of a threaded fitting (reveal pin) between two opposing surfaces of a building or structure to form a solid anchorage to which a scaffold may be tied.

Rigger
A person certified by Saudi Aramco to prepare a load for lifting. Saudi Aramco rigger categories are Rigger I, II and III (See Chapter III-7, *Cranes and Lifting Equipment,* of this manual).

Rigging Hardware
Items used to rig, lift, secure and/or support a load. Examples include, but are not limited to: slings, shackles, eyebolts, master links, etc.

Rope Grab
A deceleration device that travels on a lifeline and automatically engages the lifeline by use of friction and locks in place to stop the fall (descent) of personnel. Rope grabs usually employ the principles of inertial locking, cam/lever locking or both.

Runner (Ledger) – Scaffold
A lengthwise horizontal scaffold tube extending from post (standard) to post, supports the bearers (transoms) and forms a tie between the posts.

Safety Deck Attachment
An attachment used to secure an initially placed sheet of decking to keep proper alignment and bearing with structural support members.

Safe Working Load (SWL)
The manufacturer's specified maximum load to be applied to a component. The safe working load is also the load (mass or force) which a given lifting device or lifting arrangement can safely lift, suspend or lower.

Saudi Aramco Proponent Organization (SAPO)
Saudi Aramco department responsible for the work being performed or other organization authorized to act on behalf of the Saudi Aramco proponent department.

Self-Contained Breathing Apparatus (SCBA)
An atmosphere-supplying respirator in which the respirable pressurized air source is carried by the wearer. A device worn by emergency responders, firefighters, and others to provide breathable air in an IDLH (Immediately Dangerous to Life and Health) atmosphere. The term "self-contained" means that the breathing set is not dependent on a remote supply (e.g., through a long hose). An SCBA typically has three main components: a high-pressure tank, a pressure regulator and an inhalation connection (mouthpiece, mouth mask or face mask). SCBAs utilize either "positive pressure" or "negative pressure" operation. A "negative pressure" SCBA delivers air to the wearer when they breath in, or reduce the pressure inside the mask to less than outside pressure. A "positive pressure" SCBA maintains a small pressure inside the face piece. Although the pressure drops when the wearer breathes in, the device always maintains a higher pressure inside the mask than outside of the mask. Therefore, if the seal of the mask against the user's face leaks slightly (due to facial hair or facial deformations), there is a flow of clean air out of the device, preventing inward leakage of contaminants.

Scaffold
A temporary elevated platform (supported or underhung) and its supporting components (including ties) used for supporting personnel, materials or both. Types of scaffolds include:

Base-Supported
A scaffold with posts (standards) supported at their base (not underhung).

Birdcage
A scaffold with more than two lines of posts (standards) or hanger tubes (if underhung) across the width of the scaffold.

Bracket (Tank Builder's)
A scaffold supported by bracket straps welded to the tank wall. Upright brackets are hooked to the straps.

Fabricated Tubular Frame
A scaffold consisting of platform(s) supported on fabricated end frames with integral posts.

Independent Run (Façade or Independent Tied)
A scaffold that has two lines of posts (standards), one line supporting the outside of the scaffold platform(s) and one line supporting the inside of the platform(s). The bearers (transoms) are not built into the wall of the building. This scaffold is usually tied to the building for stability.

Mobile
A rigid scaffold assembly supported by casters that can be manually moved horizontally.

Special
A scaffold that meets any of the conditions listed in GI 8.001 and for which a structural engineering review of the scaffold plan is required.

System
Consists of posts (standards) with fixed connection points that accept runners (ledgers), bearers (transoms) and braces that can be interconnected at predetermined levels.

Tower
A supported scaffold consisting of only four posts (standards) connected together longitudinally with runners (ledgers) and bearers (transoms) at right angles to each other, forming a square or rectangular tower. A tower scaffold may be constructed of tube and coupler, fabricated tubular frame or system scaffolding.

Tube-and-Coupler
Constructed of steel tubing that serves as posts (standards), runners (ledgers), bearers (transoms), braces and ties with a base supporting the posts, and specially designed scaffold couplers that serve to connect the various members.

Underhung (Slung or Suspended)
Suspended by rigidly attached scaffold tubes and load bearing couplers to an overhead structure directly above (not outrigger beams), and having a work platform that cannot be raised or lowered.

Scaffold Measurements
Dimensions of a scaffold:

Bay
The space between the centerlines of adjacent posts (standards) along the face of a scaffold.

Bay Length
The horizontal, longitudinal distance between centers of two adjacent posts (standards).

Height
The vertical distance between the scaffold base and the topmost assembly of runners (ledgers) and bearers (transoms).

Length
The horizontal distance along the runners (ledgers) between the scaffold's extreme longitudinal posts (standards); sometimes designated by the number of bays.

Longitudinal
The long direction of the scaffold, usually parallel to the scaffold's planks.

Transverse
The short direction of the scaffold, usually perpendicular to the scaffold's planks.

Width
The maximum horizontal transverse distance of a scaffold measured at right angles to the runners (ledgers) from center of the posts (standards) that are the farthest apart. Sometimes designated by the number of planks that can fit within the posts.

Screwjack
A load-carrying device used at the base of the scaffold to compensate for variations in ground levels.

Self-Retracting Lifeline/Lanyard
A personal fall protection deceleration device that contains a drum-wound line that may be slowly extracted from or retracted onto the drum under slight tension during normal movement. If a fall occurs, the device automatically locks the drum and arrests (or stops) the fall.

Shall
When the term "shall" is used in this manual, it is a mandatory requirement.

Shear Connector
Headed steel studs, steel bars, steel lugs and similar devices that are attached to a structural member for the purpose of achieving composite action with concrete.

Shoring – Excavation
Hydraulic, timber or mechanical system that supports the sides of an excavation and is designed to prevent sidewall cave-ins.

Shoring, System Scaffold – Concrete
An assembly used as a load-carrying shoring structure, consisting of fabricated posts, braces, ties, adjustable bases and other components that connect to the uprights to form the shoring structure.

Shoring, Tube and Coupler – Concrete
An assembly used as a load-carrying shoring structure for concrete formwork, consisting of scaffold-grade tubing which serves as posts, braces and ties; a base supporting the posts; and scaffold-grade couplers which serve to connect the uprights and join the various members.

Sill (Sole Board or Sole Plate) – Scaffold
A timber spreader used to distribute the load from a scaffold base plate to the ground.

Single Post Shore (Or Pole Shore) – Concrete
Individual vertical members used to support the weight of the formwork, concrete and construction loads.

Skiff
A small boat.

Slip Blind
A blind used for the isolation of process piping that meets the pipe rating and size for that service per ANSI B31.3.

Sloping – Excavation
A method of protecting personnel from sidewall cave-in by forming sides of an excavation that are inclined away from the excavation. The safe angle of slope required varies with different types of soil, exposure to the elements and superimposed loads.

Snap Hook
A connector comprised of a hook-shaped member with a normally closed keeper, or similar arrangement, that may be opened to permit the hook to receive an object and, when released, automatically closes to retain the object. Snap hooks are generally of two types: 1) a locking type with a self-closing, self-locking keeper that remains closed and locked until unlocked and pressed open for connection or disconnection and 2) a nonlocking type with a self-closing keeper that remains closed until pressed open for connection or disconnection.

Soil Classification
A method of categorizing soil and rock deposits as Type A, B or C in decreasing order of stability. Soil type is determined by an analysis of the soil's properties and how it performs under exposure to the elements and superimposed loads. If the type of soil cannot be accurately determined, then Type C soil is to be assumed for design of protective systems.

Source
An interchangeable term with "isotope" that is used to describe a radioactive material that produces ionizing radiation.

Spigot
A pinned or bolted internal fitting to join one post (standard) to another coaxially. Used in system scaffolds.

Spigot Pin
A pin or bolt placed transversely through the spigot and the scaffold post (standard) to prevent the spigot from pulling out of the tube. Also known as tension pin, dowel pin or coupling pin.

Stable Rock
Natural solid mineral matter that can be excavated with vertical sides and remain intact while exposed. It is usually identified by a rock name such as granite or sandstone.

Steel Erection
The construction, alteration or repair of steel buildings, bridges and other structures, including the installation of metal decking and all planking used during the process of erection.

Steel Joist
An open web, secondary load-carrying member 44 m (144 ft) or less, designed by the manufacturer and used for the support of floors and roofs. This does not include structural steel trusses or cold-formed joists.

Steel Joist Girder
An open web, primary load-carrying member designed by the manufacturer and used for the support of floors and roofs. This does not include structural steel trusses.

Steel Truss
An open web member designed of structural steel components by the project structural engineer of record. For the purposes of this subpart, a steel truss is considered equivalent to a solid web structural member.

Structural Steel
A steel member or a member made of a substitute material such as, but not limited to: fiberglass, aluminum or composite members. These members include, but are not limited to: steel joists, joist girders, purlins, columns, beams, trusses, splices, seats, metal decking, girts, bridging and cold-formed metal framing which is integrated with the structural steel framing of a building.

Support System
Structures such as underpinning, bracing and shoring that provide support to an adjacent structure or underground installation.

Suspended Personnel Platform (Manbasket)
A device designed and constructed to be attached to the crane hook block to lift personnel in a safe manner.

Suspension Trauma Safety Strap (Foot Strap)
Allows a suspended worker to stand up in their harness to relieve pressure on circulation points while awaiting rescue.

Tag Line
A rope attached to a suspended load that allows a worker to control its movement.

Tailing
The placement of a load resting on the ground from the horizontal position to the vertical position or from the vertical position to the horizontal position.

Tandem Lift (Multi-Crane Lift)
Crane lift involving two or more cranes lifting or tailing the same load at the same time.

Tank
A container for holding gases, liquids or solids.

Thermoluminescent dosimeter (TLD)
A type of radiation dosimeter. A TLD measures ionizing radiation exposure by measuring the amount of visible light emitted from a crystal in the detector when the crystal is heated.

Tie – Scaffold
Scaffold components installed to provide anchor points for a scaffold to a building or structure. Used to provide lateral stability to the scaffold.

Tie-Off
The act of personnel wearing fall protection equipment physically connecting himself to an anchor point. It also means the condition of personnel being connected to such an anchorage.

Tie Tube – Scaffold
A tube used to connect the scaffold to a tie anchor point (i.e., box tie, reveal tie, two-way tie).

Training Needs Analysis
The formal process of identifying the training gap and its related training needs. It is the identification of training requirements for an individual by evaluating each aspect of their job description so that the skills, concepts and attitudes necessary can be effectively identified and appropriate training can be specified.

Trapeze Tube – Scaffold
A horizontal scaffold tube used in erection, modification and dismantling of an underhung scaffold.

Traxcavator
A heavy piece of equipment that combines a tractor and excavator.

Trench
A narrow excavation (in relation to its length) where the depth is greater than the bottom width.

Trench Shield
A structure that protects personnel inside it by withstanding the forces imposed by sidewall cave-in on two sides.

Two-Way Tie – Scaffold
An assembly of scaffold components through an opening in a wall or other solid structure to provide an anchor point for scaffold ties.

Type A Soil
Cohesive soils with an unconfined compressive strength of 1.5 ton per square foot (tsf) (144 kPa) or greater are classified as Type A. Examples of cohesive soils are: clay, silty clay, sandy clay, clay loam and, in some cases, silty clay loam and sandy clay loam. Cemented soils such as marl are also considered Type A. However, no soil is Type A if one or more of the following conditions are true:

- The soil is fissured.
- The soil is subject to vibration from heavy traffic, pile driving or similar effects.
- The soil has been previously disturbed.
- The soil is part of a sloped, layered system where the layers dip into the excavation on a slope of four horizontal to one vertical or greater.
- The soil is subject to other factors that would require it to be classified as a less-stable material.

Type B Soil
Soils classified as Type B are:

- Cohesive soils with an unconfined compressive strength greater than 0.5 tsf (48 kPa) but less than 1.5 tsf (144 kPa).

- Granular cohesionless soils including angular gravel (similar to crushed rock), silt, silt loam, sandy loam and, in some cases, silty clay loam and sandy loam clay.
- Soil that meets the unconfined compressive strength or cementation requirements for Type A, but is fissured or subject to vibration.
- Dry rock that is not stable.
- Material that is part of a sloped, layered system where the layers dip into the excavation on a slope less steep than four horizontal to one vertical but only if the material would otherwise be classified as Type B.

Type C Soil

Soils classified as Type C are:

- Cohesive soils with an unconfined compressive strength of 0.5 tsf (48 kPa) or less.
- Previously disturbed soil (e.g., fill) is to be considered as Type C soil.
- Granular soils, including gravel, sweet sand, desert sand and loamy sand.
- Submerged soil or soil from which water is freely seeping.
- Submerged rock that is not stable.
- Material in a sloped layered system where the layers dip into the excavation or a slope of four horizontal to one vertical.

Unprotected Sides and Edges

Sides or edges, except at entrances to points of access, of a walking/working surface, including: floors, roofs, ramps and runways, where there is no wall or guardrail system at least 1.0 m (39 inches) high.

Vehicle

Mechanized equipment designed for carrying or transporting personnel or material. This includes: passenger automobiles, pickup trucks and heavy equipment such as, but not limited to: dump trucks, large tractor-trailers, trucks, backhoes and mobile cranes.

Vertical Slip Form

A form that is raised as concrete is poured (e.g., moves vertically to form walls).

Work Permit

A form that authorizes specific construction, maintenance, inspection, or repair to be conducted in restricted areas or designated locations. When issued, work permits serve as official records of conditions and requirements agreed upon by the issuer and receiver. They list minimum safety precautions to be taken and hazards which must be controlled.

Working Level

An elevated platform supporting equipment, personnel and/or materials.